Automation Technology

Full Line Catalog, Volume 3 – Edition 2015/2016

3

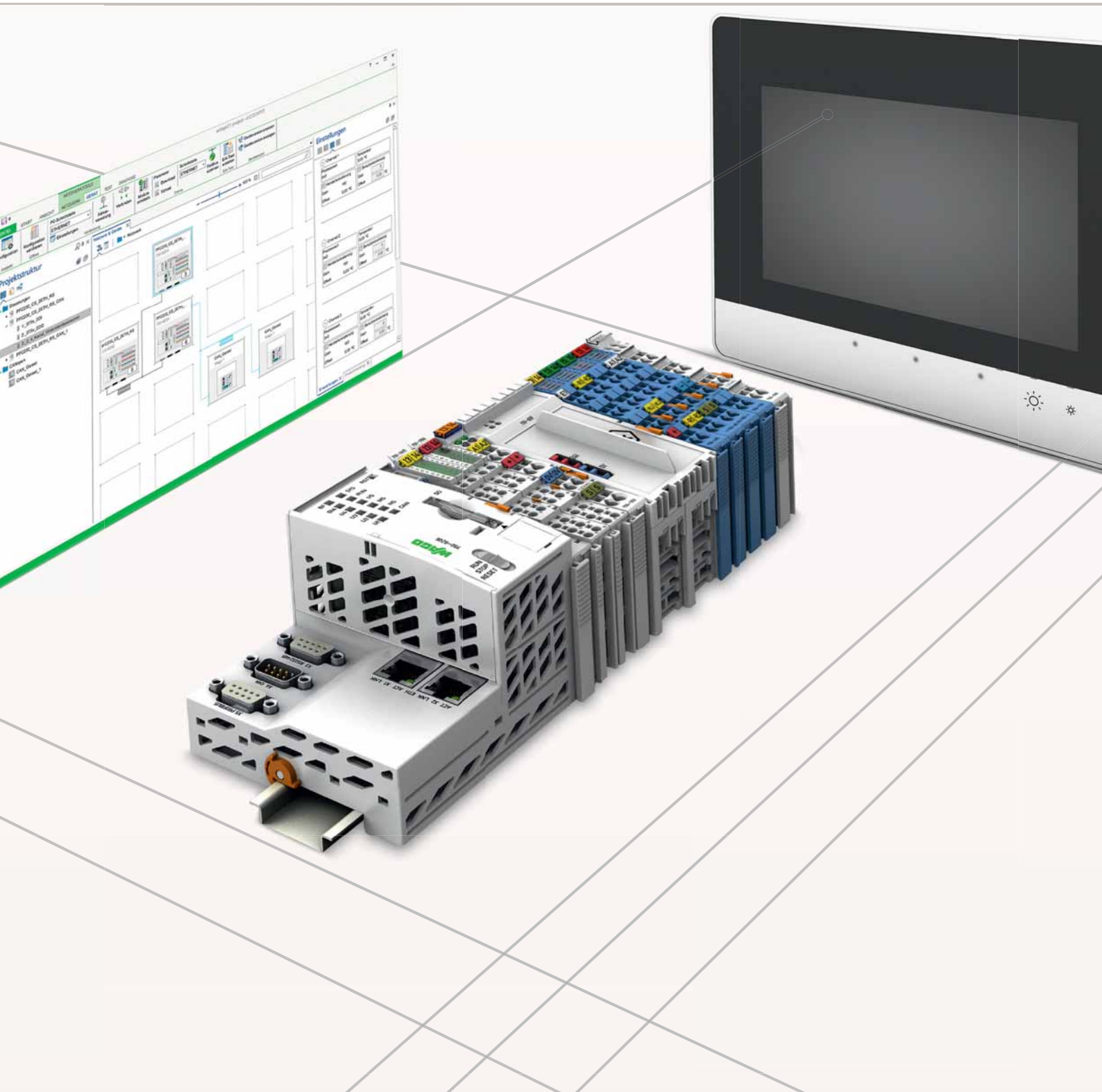

WAGO Full Line Catalogs

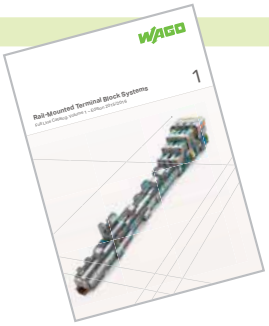

Volume 1, Rail-Mounted Terminal Block Systems

- Rail-Mounted Terminal Blocks
- Rail-Mounted Terminal Blocks with Pluggable Connector (X-COM®-SYSTEM and X-COM®S-SYSTEM)
- Patchboard Systems
- Terminal Strips
- PUSH WIRE® Connectors for Junction Boxes
- Lighting Connectors
- Shield Connecting System

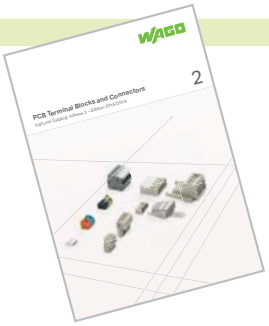

Volume 2, PCB Terminal Blocks and Connectors

- PCB Terminal Blocks
- SMD PCB Terminal Blocks
- *MULTI CONNECTION SYSTEM (MCS)*
- Pluggable PCB Terminal Blocks
- Feedthrough Terminal Blocks
- Specialty Connectors
- Empty Housings

Volume 3, Automation Technology

- Software
- Operating & Monitoring – *PERSPECTO®*
- Controllers
- Modular I/O-SYSTEM, IP20/IP67
- Industrial Switches
- Radio Technology, *TO-PASS®* Telecontrol Technology
- IP67 Sensor/Actuator Boxes, IP67 Cables and Connectors

Volume 4, Interface Electronic

- Relay and Optocoupler Modules
- *JUMPFLEX®* Signal Conditioners and Isolation Amplifiers
- Current and Energy Measurement Technology
- *EPSITRON®* Power Supply System
- Interface Modules and System Wiring
- Overvoltage Protection
- Interface Modules with Specialty Functions
- Empty Housings

Volume 5, WINSTA® – The Pluggable Connection System

- *WINSTA®* MINI – Pluggable Connectors
- *WINSTA®* MINI special – Pluggable Connectors
- *WINSTA®* MIDI – Pluggable Connectors
- *WINSTA®* MIDI special – Pluggable Connectors
- *WINSTA®* MAXI – Pluggable Connectors
- *WINSTA®* RD – Cable Assemblies
- *WINSTA®* KNX – Pluggable Connectors
- *WINSTA®* IDC – Flat Cable Systems
- *WINSTA®* – Distribution Boxes

Volume 3, Automation Technology

		Page
Software	**Software** Engineering Software, Runtime Software, Applications	6
Operating and Monitoring	**Operating and Monitoring – *PERSPECTO*®** Control Panels, Web Panels	32
Controllers	**Controllers** PFC200, Programmable Fieldbus Controllers	44
I/O-Systems	**I/O-System – 750 and 753 Series** Fieldbus Couplers and I/O Modules (IP20)	116
	I/O-System – 750 XTR Series Fieldbus Couplers and I/O Modules (IP20) for eXTReme Environmental Conditions	392
	I/O-System – *SPEEDWAY* Fieldbus Couplers and I/O Modules (IP67)	428
Infrastructure	**Industrial Switches**	522
	Radio Technology *Bluetooth*®, EnOcean and WLAN Components	538
	Telecontrol Technology – *TO-PASS*® GSM, GPRS, GPS, SMS	556
	Sensor/Actuator Boxes M8 and M12 Passive Distribution Boxes (IP67)	578
	Accessories **Tools**	600
	Technical Section	692
	Index **Addresses**	710 716

Operating WAGO Connection Technologies

Please follow the applicable product-specific termination instructions:

PUSH-IN CAGE CLAMP®

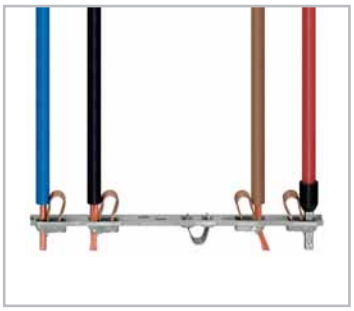

Push-in CAGE CLAMP® terminates the following copper conductors:
solid

stranded

fine-stranded, also with tinned single strands

fine-stranded, tip-bonded

fine-stranded, with ferrule (gastight crimped)

fine-stranded, with pin terminal (gastight crimped)

The universal connection with an additional advantage: Push-in connection

Terminate solid and stranded, as well as ferruled conductors, by simply pushing them in – no operating tool needed.

Easily terminate all conductor types:
- Open the clamping unit
- Insert conductor
- Release the clamp – done!

CAGE CLAMP®

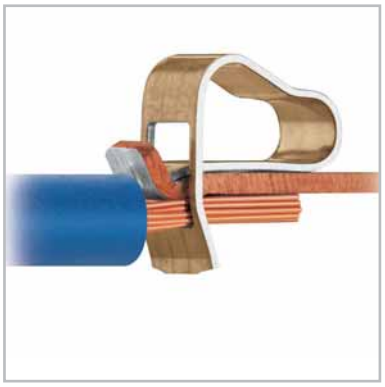

CAGE CLAMP® terminates the following copper conductors:
solid

stranded

fine-stranded, also with tinned single strands

fine-stranded, tip-bonded

fine-stranded, with ferrule (gastight crimped)

fine-stranded, with pin terminal (gastight crimped)

The universal connection for solid, stranded and fine-stranded conductors

To use:
- Open the clamping unit
- Insert conductor
- Release the clamp – done!

Operating WAGO Connection Technologies

Please follow the applicable product-specific termination instructions:

POWER CAGE CLAMP®

POWER CAGE CLAMP terminates the following copper conductors:
solid

stranded

fine-stranded, also with tinned single strands

fine-stranded, with pin terminal (gastight crimped)

The universal connection for conductors larger than 2 AWG (35 mm²)

To use:
- Open clamp by turning an Allen wrench counter-clockwise.
- Press the integrated latch to open clamping unit for hands-free wiring.
- Insert conductor.
- A small counter-clockwise rotation closes the clamp, securing conductor.

PUSH WIRE®

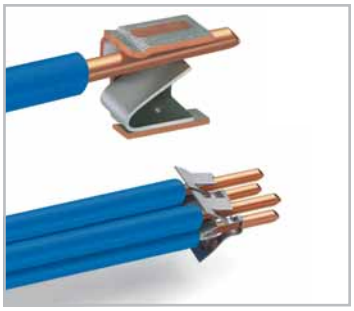

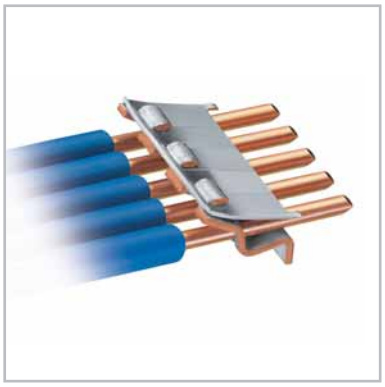

PUSH WIRE® terminates the following copper conductors:
solid

PUSH WIRE® connection for solid and stranded conductors (depending on the model used)

Easy to use:
Tool-free, twist-free terminations for solid and rigid stranded conductors – simply push into unit.

WAGO Automation Technology

Software

Engineering Software

- PC-based software
- Customized tools for every automation task

Runtime Software

- Standard machine component
- Comprehensive, fully tested software modules for controlling, regulating, operating & monitoring

Mobile Software (Apps)

- Machine operation and monitoring on tablet and smartphone

Operating & Monitoring

PERSPECTO® Control Panels

- Combination of control and visualization
- 8.9 cm ... 38.1 cm (3.5″ ... 15″)

2

PERSPECTO® Web Panels

- Web-based visualization
- 8.9 cm ... 30.7 cm (3.5″ ... 12″)

Controllers

PFC200

3.1

- Maximum performance in a minimum space
- High processing speed
- Additional operating elements (e.g., start/stop switch)
- Based on Linux® also in high-level language programmable

Programmable Fieldbus Controllers

3.2

- Decentralized intelligence based on fieldbus couplers
- Programmable to IEC 61131-3
- WAGO-I/O-SYSTEM 750, modular

I/O-Systems

I/O-System — 750 and 753 Series

4

- Highly versatile
- More than 500 modules available
- Functional safety
- Ex i

I/O-System — 750 XTR Series

5

For demanding applications where the following are critical:

- Extreme temperature stability
- Immunity to interference and impulse-voltage withstand
- Vibration and shock resistance

I/O-System — *SPEEDWAY*

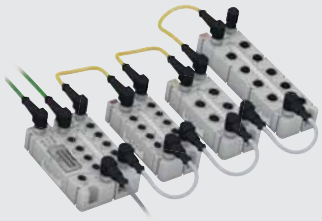

6

- Uncompromising protection, even in the harshest environments outside the control cabinet
- Degree of protection: IP67
- Fully encapsulated

Infrastructure

ETHERNET Switches

7

- Copper cables
- Fiber optic cables
- Ring redundancy

Radio Technology

8

- *Bluetooth*®
- WLAN
- EnOcean®

TO-PASS® Telecontrol Technology

9

- Telecontrol technology based on GSM/GPRS

Software Solutions (Applications)

- Reusable, customizable solutions

1

Programmable Fieldbus Controllers XTR

3.3

For demanding applications where the following are critical:

- Extreme temperature stability
- Immunity to interference and impulse-voltage withstand
- Vibration and shock resistance

3

Sensor/Actuator Boxes

10

- Passive M8/M12 sensor/actuator boxes
- Machine-level signal connection in harsh environments

Power Supplies Accessories

11

1 – Software

Engineering Software 10
Runtime Software 22
Mobile Software (Apps) 26
Software Solutions (Applications) 28

2 – Operating & Monitoring

Web Panels – *PERSPECTO*® 38
Control Panels – *PERSPECTO*® 40

3 – Controllers

2 – Control Panels – *PERSPECTO*® 40

3.1 – PFC200 47
3.2 – Programmable Fieldbus Controllers 61
3.3 – Programmable Fieldbus Controllers XTR 107

I/O-Systems

4 – 750 and 753 Series 117
4.1 – Fieldbus Couplers 127
4.2 ... 4.10 – I/O Modules 183

5 – 750 XTR Series 393
6 – *SPEEDWAY* 429

Infrastructure

7 – ETHERNET Switches 523
8 – Radio Technology 539
9 – *TO-PASS*® Telecontrol Technology 557
10 – Sensor/Actuator Boxes 579

11 – Accessories

Power Supplies 602
Cable & Pluggable Connectors IP67 620

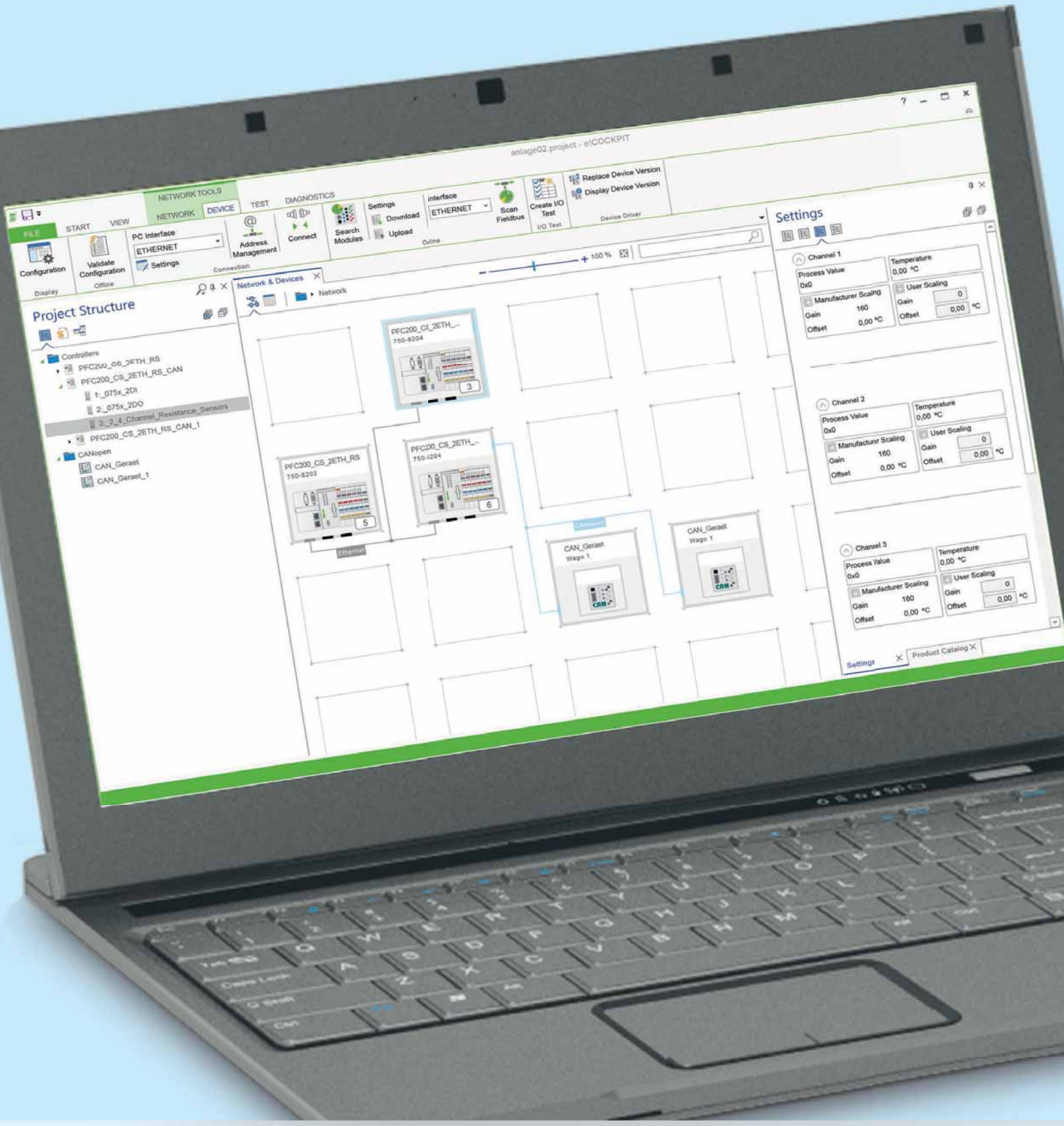

Software

Engineering Software	Runtime Software	Mobile Software (Apps)	Software Solutions (Applications)
• PC-based software • Customized tools for every automation task	• Standard machine component • Comprehensive, tested software modules for control, regulation, operation and monitoring	• Machine operation and monitoring via tablet and smartphone	• Reusable, customizable solutions

Software

Engineering Software, Runtime Software, Mobile Software and Software Solutions

			Page
General Product Information			8
	Description	**Item No.**	
Engineering Software			
Designing and Marking	***smart***Designer	Online	Section
	productLOCATOR	Download	11
	smartMARKING	Download	
Programming and Configuration Software	***e!****COCKPIT*	2759-0101	10
	WAGO-I/O-*PRO*	759-911	12
	WAGO-I/O-*CHECK*	759-920	13
	WAGOframe	759-370	14
	TO-PASS® Configuration Software	759-930	15
	IEC 60870/IEC 61850 Configurator	Download	16
	BACnet Configurator	Download	18
	DALI Configurator	Download	19
	LON® Configurator	Download	20
Plug-Ins	Device- and Industry-Specific Configurators		
	WAGO ETS Plug-In	Download	21
Runtime Software			
Libraries	***e!****COCKPIT* (based on CODESYS 3)	Download	22
	WAGO-I/O-*PRO* (based on CODESYS 2)	Download	23
Mobile Software (Apps)			
	WAGO WebVisu App	Download	26
Software Solutions (Applications)			
	TO-PASS® Web Portal	761-700 761-701 761-702 761-703 761-704	28
	Telecontrol Gateway	759-200	29
Accessories			
Configuration Cables, USB Communication Cables, *Bluetooth*® Adapter			30

PLC

Software Factors into Success

Projects in production, process and building automation are characterized by increasingly short implementation times, ever more complex structures and the increasing role of software as part of the overall solution. In fact, software is becoming an essential factor that influences the success of a project.

Engineering software is used for both machine and system development, as well as the implementation of building automation projects. Runtime software controls the devices at operating time.

Customized Software Tools

Significant challenges must be overcome to develop, operate and maintain modern machines and systems, as well as program, configure and commission applications for building automation. Customized software tools are available as needed for every task – embedded in integrated engineering or as a stand-alone tool for a set of dedicated functions.

CODESYS as an Integrated Environment

All WAGO controllers are equipped with the high-performance CODESYS industry standard. This allows software development in IEC 61131-3 PLC programming languages (ST, FBD, LD, IL, SFC and CFC). The proven programming environment guides developers, allowing them to reuse and further develop existing projects without relearning software. This means that modern paradigms, such as Object-Oriented Programming (OOP), or modern visualization technologies are available.

Ready Software Solutions

Premade software solutions or applications simplify automation. Such solutions involve reusable software that can be used for the specific application by making simple adjustments. This approach saves time and money.

Open to Proven Standards

The software is open to well-established standards, making it an investment in the future. The software supports all prominent fieldbuses, for example. Thus, WAGO components can be seamlessly integrated into engineering software via standardized device description files. In addition, connecting controllers to fieldbus systems via WAGO engineering software is an easy task – opening up all the advantages of existing field devices.
Ultimately, WAGO software is based on modern IT standards and development methods – guaranteeing long-term viability.

Extensive Import and Export Functionality

The software tools are impressive with their ability to exchange project data with external software tools involved in the development process, which prevents costly, error-prone double entry.

Industry-Specific Configurators

Whether industry, process or building automation, every sector and industry has specific requirements. Therefore, plug-ins specifically customized for the needs of individual industries are available in addition to the common software base. These plug-ins can be used, for example, to measure energy or easily configure a DALI network.

- Customized software for every automation task
- Extensive import functions from external design tools
- Plug-ins for industry-specific development environments
- Comprehensive software solutions for various industries
- Simple and secure licensing

Software
General Product Information

Software for Mechanical Engineering

Software is used in every phase of machine and system automation – from design to successful machine operation.

Design	Software Development	Commissioning	Machine Operation
• CAD and ECAD • Component selection	• Configuration • Parameterization • Programming • Simulation • Visualization	• Testing • Diagnostics	• Updating • (Remote) maintenance • Monitoring • Controlling, regulating, operating and monitoring

Engineering Software

Design | Software Development | Commissioning | Machine Operation

Quickly implementing complex machine functions is critical in modern mechanical engineering applications. PC-based engineering software supports all development activities. The focus is on simple configuration, timely programming and efficient implementation of automation network components.

Engineering tools are typically not permanently linked to the machine – they only communicate with the machine during startup and maintenance.

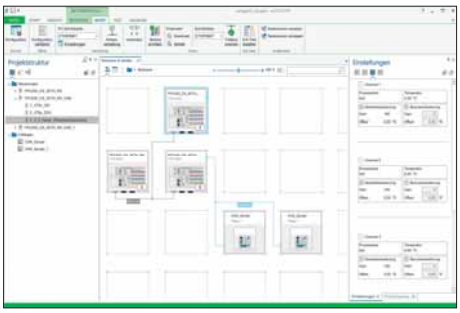

Runtime Software

Design | Software Development | Commissioning | Machine Operation

The machine is controlled by runtime software that determines behavior, while enabling both operation and current status monitoring. It also transmits operating data to higher-level systems. At this point, tried-and-tested software function blocks (libraries) help achieve development goals faster.

Unlike engineering software, runtime software operates continuously – it is a part of the machine and ensures correct operation.

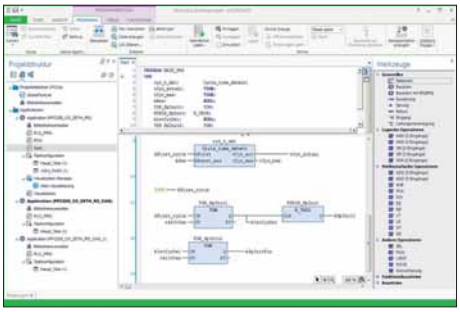

Mobile Software (Apps)

Design | Software Development | Commissioning | Machine Operation

Software on mobile devices can also be productive in the industrial environment. The software allows users, for example, to quickly and easily operate and monitor automation processes from a smartphone or tablet – from anywhere.

Mobile software typically communicates only with the machine's controller for a specific application.

e!COCKPIT

Integrated engineering, based on CODESYS 3

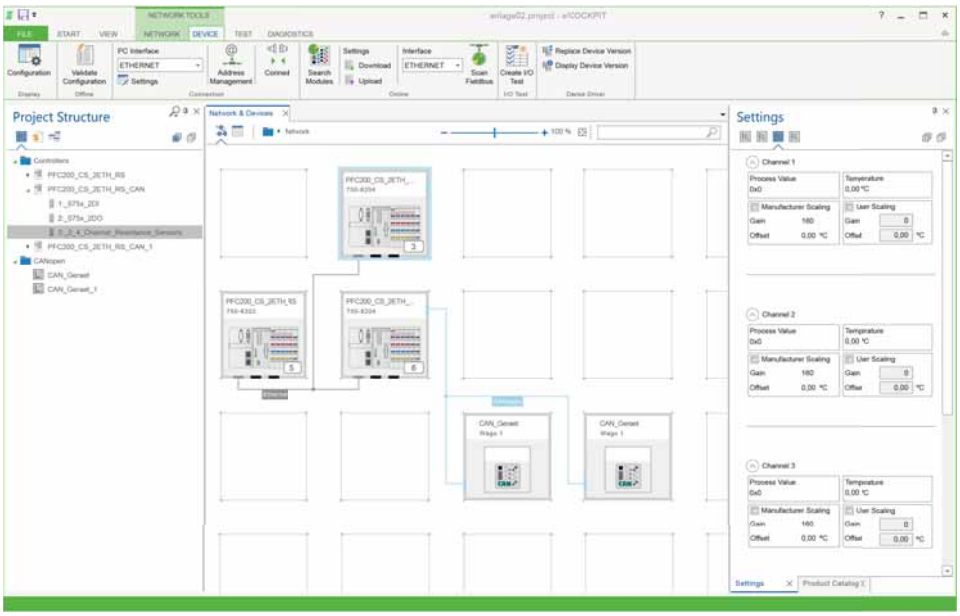

Preparing machines and systems for faster startup: e!COCKPIT the new engineering software shortens development time for automation projects while impressing with a modern and clearly laid out user interface. At the software's core is CODESYS 3, which provides the simple and versatile creation of applications.

Ensuring a project's long-term viability through sustainable cost savings hinges on a user's ability to quickly adapt to new software that offers a high degree of reusability. This sharpens your competitive edge by reducing your time to market.

WAGO set out to fulfill these exact requirements by developing its own engineering software: e!COCKPIT. This integrated development environment supports every automation task from hardware configuration, programming, simulation and visualization up to commissioning – all in one software package.

Use the programming tool to cover all important automation bases while simultaneously engineering particularly complex projects quickly and easily.

Description	Item No.	Pack. Unit
***e!COCKPIT* Workstation License**	**2759-0101/1110-2002**	1
***e!COCKPIT* Multi-User License, 10 ea.**	**2759-0101/1110-2010**	1
***e!COCKPIT* Multi-User License, 15 ea.**	**2759-0101/1110-2015**	1
***e!COCKPIT* Multi-User License, 20 ea.**	**2759-0101/1110-2020**	1
***e!COCKPIT* Site License**	**2759-0101/1110-3000**	1
***e!COCKPIT* Buy-Out License**	**2759-0101/1110-4000**	1

Workstation license: Can be installed on up to two PCs (e.g., notebook & desktop)
Multi-user license: Can be installed up to the number specified
Site license: Allows the installation of an unlimited number of licenses at one location
Buy-out license: Allows the installation of an unlimited number of licenses in one company at all company sites in that country. In addition the software may be used in all products produces by the company that contain WAGO automation technology and therefore form a functional unit.

Accessories	Item No.	Pack. Unit
WAGO USB communication cable, 2.5 m long	750-923	1
WAGO USB communication cable, 5 m long	750-923/000-001	1

Technical Data	
Supported operating systems	Windows 7 (32- and 64-bit), Windows 8, Windows 8.1 (32- and 64-bit)
System requirements	
Processor	Core2Duo
Memory	2 GB
Hard disk storage	1 GB
Graphics resolution	1366 x 768 px
Supported devices	Controllers based on CODESYS 3, I/O modules (750/753)
Supported fieldbuses	CANopen, Modbus TCP/UDP, MODBUS RTU, PROFIBUS
Supported device descriptions	DTP, EDS, GSD
Connectivity	TCP, USB, OPC, CODESYS network variables, CODESYS data server
Programming languages	IEC 61131-3: ST, LD, FBD, IL, FC, CFC
Import/Export formats	CODESYS 3 project files (*.project)
Delivery type	Installation file (download)

Internet connection may be required for license activation.

Configuration and Parameterization

The integrated *e!COCKPIT* configurators provide modern operating tools and workspaces, such as:

- Graphical network topology: Complex dependencies between network participants and their current states are easily and intuitively accessed.
- Drag & Drop: Simplifies interaction with devices.
- Copy & Paste: Individual devices or whole network branches can be duplicated quickly.
- Batch processing: Parameter values are set simultaneously for several devices.

Programming

e!COCKPIT offers multiple software development options:

- IEC 61131-3 PLC programming languages: Structured Text (ST), Ladder Diagram (LD), Function Block Diagram (FBD), Instruction List (IL), Sequential Function Chart (SFC), Continuous Function Chart (CFC).
- For flexibility, all programming languages can be combined with one another.
- Created programs can be easily debugged on the engineering PC via simulation.
- New paradigms such as object-oriented programming are included.

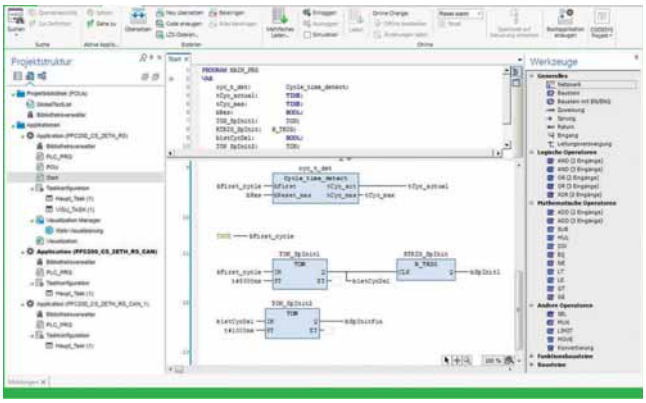

Visualization

Advanced user interfaces for operating and monitoring machines are standard. Today, HMI-based design is a critical factor that influences the purchase of an entire automation line. *e!COCKPIT* employs Drag & Drop to streamline the design of modern user interfaces. The integrated visualization editor provides:

- Access to IEC program variables.
- Closed simulation of HMI and PLC program on the engineering PC.
- Guaranteed language independence via Unicode character set.
- Current standards such as HTML 5 or CSS.

Diagnostics

Being acutely aware of the automation network's current status is an absolute must for the rapid detection and elimination of errors – be it during development in the office or directly on the machine during commissioning.

e!COCKPIT provides comprehensive diagnostic capabilities:

- Individual views always display the controllers' status information, for example, both graphically and in tabular form.
- To keep project on time, error messages are transmitted directly and clearly.
- The structured wiring test function systematically identifies wiring errors.

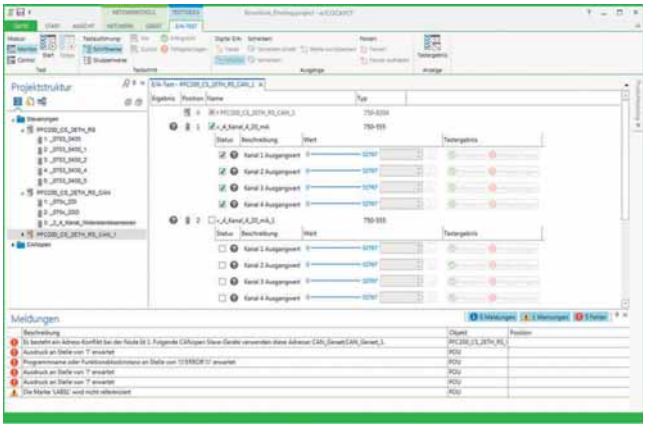

WAGO-I/O-*PRO* V2.3

IEC 61131-3 programming tool

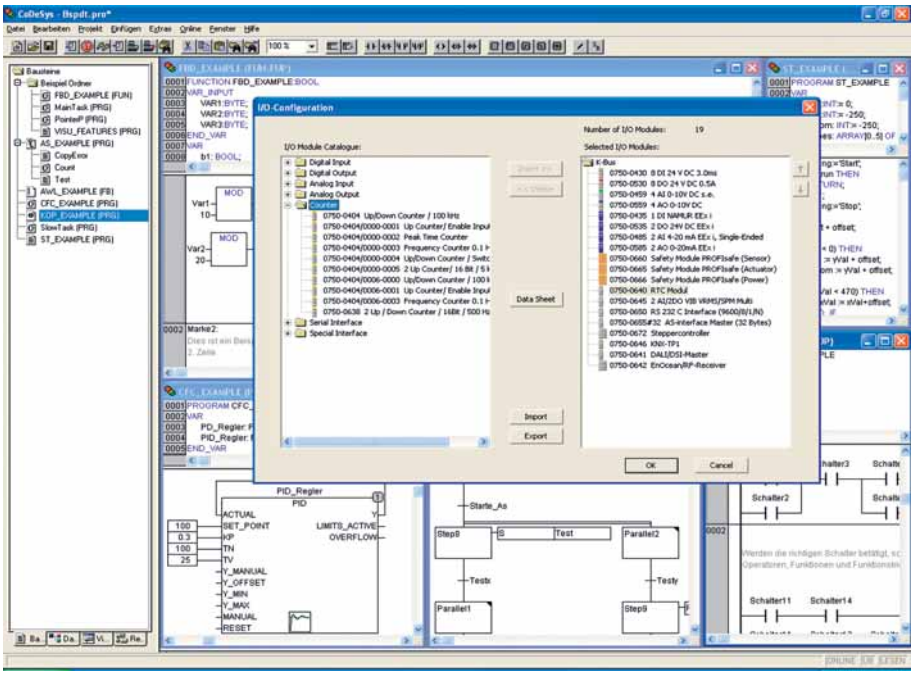

WAGO-I/O-*PRO* is a programming and visualization tool for control programs. This software is used to develop PLC applications for WAGO-I/O-SYSTEM 750 Programmable Fieldbus Controllers.

WAGO-I/O-*PRO* runs in line with the IEC 61131-3 standard. This standard describes the requirements of a programming system. The IL, SFC, LD, FBD and ST programming languages are supported. The optimal programming language can be chosen for each application.

With extensive programming functions, the software readily meets the increasing requirements of control program development (e.g., reusability and modularization).

- Highly efficient translation between programming languages
- Automatic declaration of variables
- Library management

Integrated test and diagnostic functions also streamline and accelerate the implementation of processes for PLC projects.

- Online status indication in program code
- Offline simulation
- Integrated process visualization
- Recording and graphical presentation of project variables

WAGO-I/O-*PRO* also offers the option of programming products from other manufacturers within the CODESYS automation alliance in addition to the standard programmable CODESYS automation alliance products from WAGO.

Description	Item No.	Pack. Unit
WAGO-I/O-*PRO* V2.3, RS-232 Kit	**759-333**	1
WAGO-I/O-*PRO* V2.3, USB Kit	**759-333/000-923**	1
WAGO-I/O-*PRO* V2.3, CD-ROM	**759-911**	1

Approvals

Shipbuilding	ABS, DNV, GL, KR, NKK, RINA

Technical Data

Supported operating systems	Windows XP (SP3 or later), Windows 7
System requirements	
Processor	1 GHz or higher
	32-bit (x86) or 64-bit (x64)
Memory	min. 1 GB RAM
	2 GB RAM or greater recommended
Hard disk storage	min. 300 MB
CD-ROM	required
Graphics resolution	min. 1024 x 786
	1280 x 1024 or higher recommended
Mouse	required
Miscellaneous	Open serial interface
Delivery type	**RS-232 Kit:**
	CD-ROM with software and serial
	750-920 Communication Cable
	USB Kit:
	CD-ROM with software and
	USB communication cable 750-923
	CD-ROM:
	CD-ROM with software, no
	communication cable

Windows® is a registered trademark of Microsoft Corporation.

WAGO-I/O-*CHECK*

Commissioning tool for the WAGO-I/O-SYSTEM 750

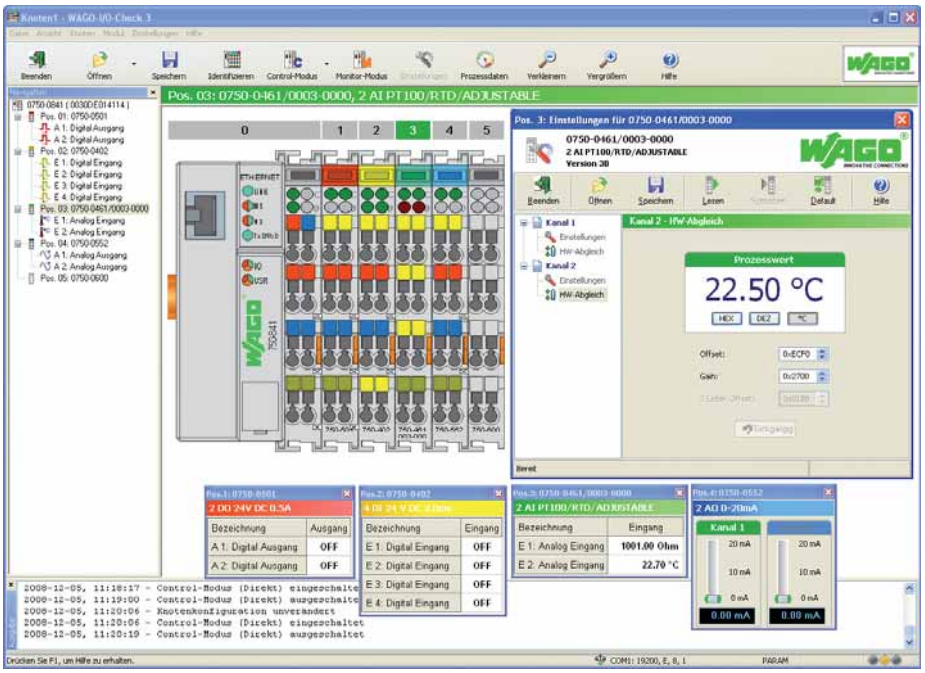

WAGO-I/O-*CHECK* is an easy-to-use Windows application for operating and displaying a WAGO-I/O-SYSTEM 750 node without connecting the node to a fieldbus system.
The software reads the configuration from the node and displays it as an on-screen graphic. The graphic can be printed together with a configuration list as documentation.

With WAGO-I/O-*CHECK*, it is possible to display and determine the process data of the bus modules. The field wiring, including all sensors and actuators, can thus be checked before startup.

Application-specific settings, such as the baud rate or sensor types, can be made with select interface, Pt100 and thermocouple modules.

For communicating between WAGO-I/O-*CHECK* and the node, the coupler must be connected at a PC's vacant serial or USB port using the communication cable supplied in the kit with the system.

Description	Item No.	Pack. Unit
WAGO-I/O-*CHECK*, RS-232 Kit	**759-302**	1
WAGO-I/O-*CHECK*, USB Kit	**759-302/000-923**	1
WAGO-I/O-*CHECK*, CD-ROM	**759-920**	1

Technical Data	
Supported operating systems	Windows XP (SP3 or later), Windows 7
System requirements	
Processor	1 GHz or higher
	32-bit (x86) or 64-bit (x64)
Memory	min. 1 GB RAM
	2 GB RAM or greater recommended
Hard disk storage	min. 150 MB
CD-ROM	required
Graphics resolution	min. 1024 x 786
	1280 x 1024 or higher recommended
Mouse	required
Delivery type	**RS-232 Kit:**
	CD-ROM with software and serial
	750-920 Communication Cable
	USB Kit:
	CD-ROM with software and USB
	communication cable 750-923
	CD-ROM:
	CD-ROM with software, no
	communication cable

Windows® is a registered trademark of Microsoft Corporation.

WAGOframe

FDT frame application for device parameterization, commissioning and diagnostics with DTM device driver

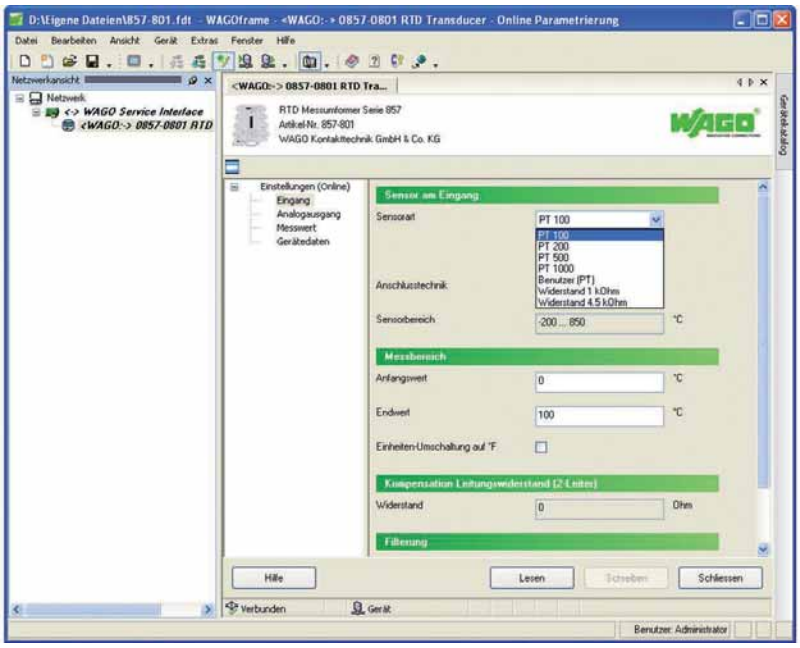

WAGOframe: *JUMPFLEX*® Signal Conditioner parameter setting

WAGOframe: Wizard function

WAGOframe is software based on the FDT/DTM standard for parameterization, commissioning and diagnostics of field devices. DTM device drivers, for the devices employed, are required to use the WAGOframe FDT frame application.

The WAGOframe FDT frame application provides a wizard to simplify the operation of components, such as WAGO *JUMPFLEX*® DTMs. This wizard guides the user through the different operating modes of DTM device drivers.

Depending on the PC communication interface used, an appropriate communication cable including DTM is required.

Description	Item No.	Pack. Unit
WAGOframe	**759-370**	1

Accessories	Item No.	Pack. Unit
WAGO USB communication cable, 2.5 m long	750-923	1
WAGO USB communication cable, 5 m long	750-923/000-001	1

Technical Data	
Supported operating systems	Windows XP (SP3 or later), Windows 7
System requirements	
Processor	1 GHz or higher
	32-bit (x86) or 64-bit (x64)
Memory	min. 1 GB RAM
	2 GB RAM or greater recommended
Hard disk storage	min. 300 MB
CD-ROM	required
Graphics resolution	min. 1024 x 786
	1280 x 1024 or higher recommended
Mouse	required
Miscellaneous	Open interface on the PC for device communication (e.g., USB, serial, ETHERNET, etc.)
Delivery type	CD-ROM with software and documentation
Additional requirements	Cable between PC communication interface and device. DTM software for the PC communication interface used. DTM software for the device.

Windows® is a registered trademark of Microsoft Corporation.

TO-PASS® Configuration Software

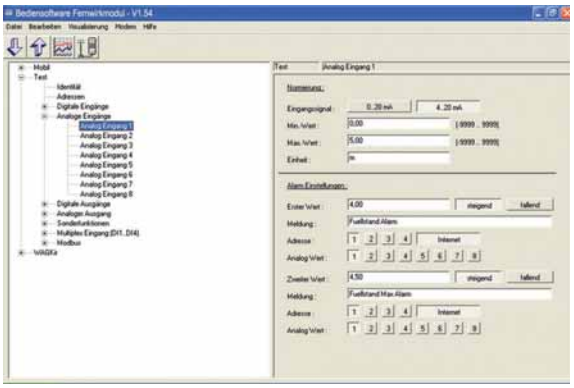

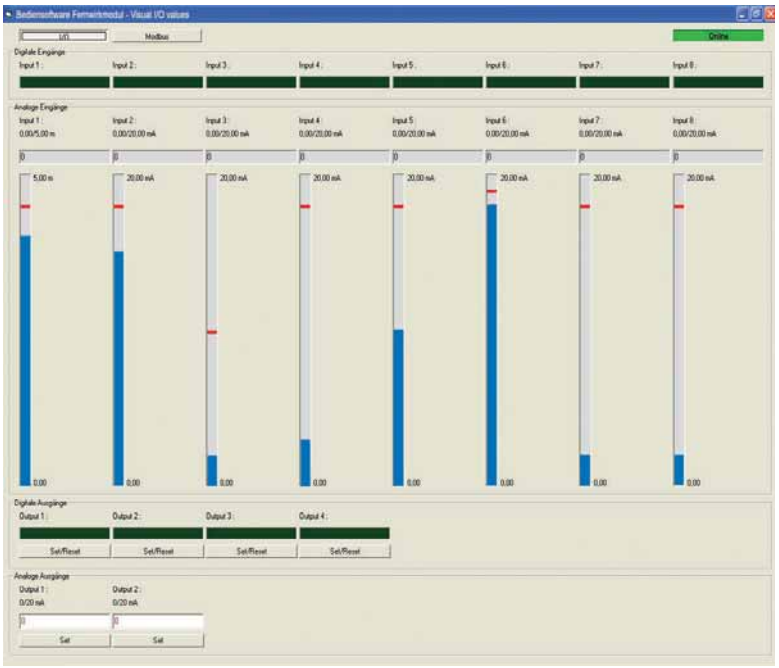

Software for configuring *TO-PASS*® Telecontrol Modules.

Compatible with Windows XP and Windows *7*.
Communication with modules via RS-232 port, USB port (via USB adapter, included in accessories) or external GSM modem.

- Easy module parameterization without programming experience
- Display current process values
- Line diagram for both data and event loggers
- Test module's GSM signal strength
- Documentation and archival of configuration data
- "Fast Copy" function for the multiplication of configuration data
- German and English language interfaces

Description	Item No.	Pack. Unit
Configuration software for Telecontrol Modules 761-11x, 761-21x and 761-31x	**759-930**	1

Accessories	Item No.	Pack. Unit
USB adapter with 1 m connection cable	761-9005	1

Technical Data	
Supported operating systems	Windows XP Professional; Windows *7*
System requirements	
Processor	Pentium 500 MHz or faster
Memory	min. 512 MB (Windows XP); min. 1 GB (Windows *7*)
Hard disk storage	min. 5 MB
CD-ROM	required
Graphics resolution	min. 1024 x 786
Mouse	required
Miscellaneous	Open serial or USB interface
Delivery type	CD-ROM with software and documentation
Additional requirements	Configuration cable

Windows® is a registered trademark of Microsoft Corporation.

IEC 60870 Configurator

Configuration dialog integrated in WAGO-I/O-*PRO* v2.3 for IEC 60870-5-101/103/104 communication parameterization

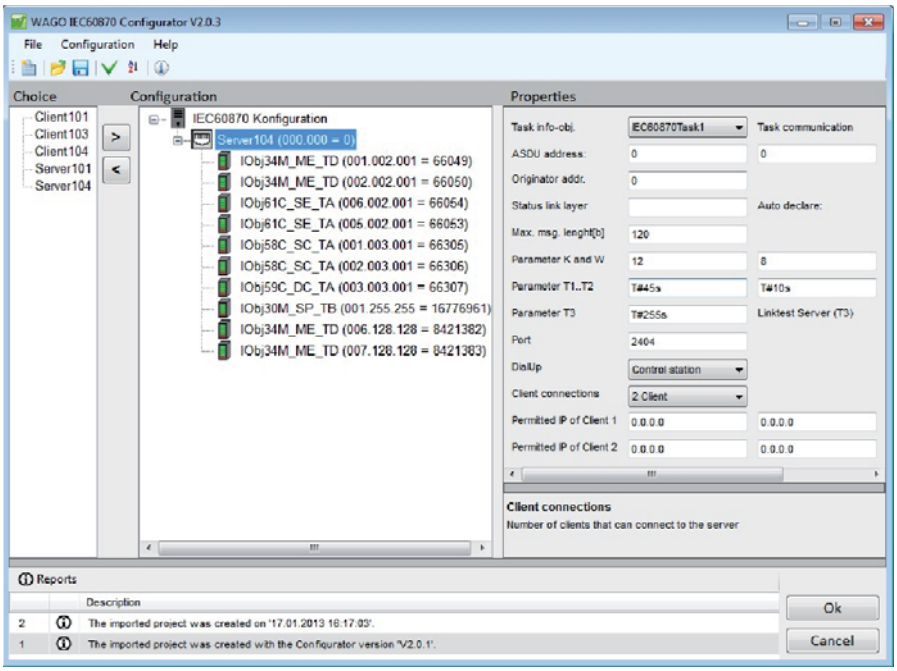

IEC 60870 configuration dialog

The IEC 60870 Configurator is part of the WAGO-I/O-*PRO* v2.3 software. The configurator fully supports the IEC 60870-5-101/103/104 specific functions of all WAGO telecontrollers.

The configurator sets up IEC 60870 objects, while configuring data exchange to the PLC application or I/O modules. Import and export functions in CSV format allow configured data to be transmitted to other engineering tools.

The IEC 60870-5-101 and 104 protocols are supported on both client and server sides, while the IEC 60870-5-103 protocol is exclusively supported on the client side. This permits the creation of gateways that convert one protocol into another, e.g., allowing protection devices to be read out via IEC 60870-5-103 and data to be transmitted to the network control system via IEC 60870-5-104.

Various options are available for the time synchronization of telecontrol substations (server). Time synchronization can be performed either via the IEC 60870 protocol with object 103 or via (S)NTP. Using the WAGO 750-640 Module, clock time can also be synchronized via DCF77 or GPS.

IEC-60870-5-101/104 information objects can be used to monitor the direction of single, double and step messages. Bit patterns, counter values, as well as normalized, scaled and floating-point measurement values can also be used. All information objects can be transmitted with or without a time stamp. This also applies to information objects in control direction.

An IEC 60870-5-104 server can simultaneously maintain up to four connections to the control system (client).

Description
IEC 60870 Configurator

Technical Data		
System requirements	WAGO-I/O-*PRO* Version 2.3.9.40 or higher	
Function	IEC 60870-5-101	Server and client
	IEC 60870-5-103	Client
	IEC 60870-5-104	Server and client
Supported controllers		
Programmable Fieldbus Controllers	0750-0872	
	0750-0880/0025-0001	
	0750-0880/0025-0002	
	0750-0880/0040-0001	
PFC200	0750-8202/0025-0001	
	0750-8202/0040-0001	
	0750-8206/0025-0001	
	0750-8206/0040-0001	

IEC 61850 Configurator

Configuration dialog integrated in WAGO-I/O-*PRO* v2.3 for IEC 61850 communication parameterization

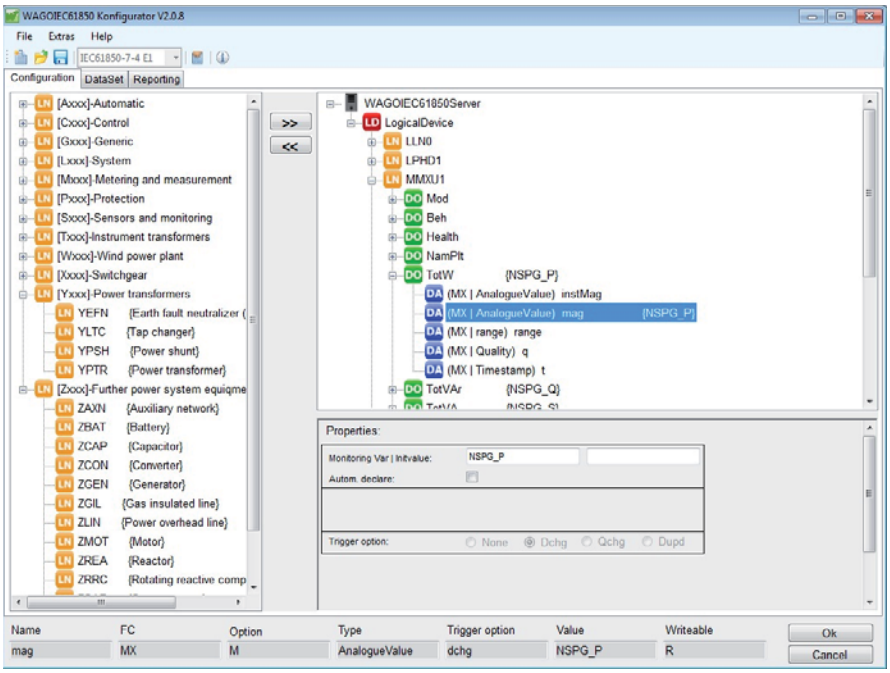

IEC 61850 configuration dialog

The IEC 61850 Configurator is part of the WAGO-I/O-*PRO* v2.3 software. The configurator fully supports the IEC 61850-specific functions of the WAGO telecontrollers.

The configurator sets up IEC 61850 objects, while configuring data exchange to the PLC application or I/O modules. Import and export functions in IEC 61850 SCL exchange format allow configured data to be transmitted to other engineering tools.

On the server side, the IEC 61850 Protocol is supported for MMS* communication to the control system. The controllers can also be operated as a GOOSE publisher or subscriber. This permits the creation of gateways that convert one protocol into another, e.g., allowing data from protection devices to be received via IEC 61850 Client and transmitted to the network control system via IEC 60870-5-104 Protocol.

Time synchronization is performed via SNTP, NTP, DCF77 and GPS (750-640 Module is also required for GPS).
Various options are available for the time synchronization of telecontrol substations (server). Synchronization can be performed via (S)NTP or clock time can be synchronized via DCF77 or GPS using the WAGO 750-640 Module.

The IEC 61850 MMS server can simultaneously maintain up to five connections to the control system (client).

The IEC 61850 Client processes data from up to 10 servers with each 32 requests.

*MMS = Manufacturing Messaging Specification

Description
IEC 61850 Configurator

Technical Data	
System requirements	WAGO-I/O-*PRO* Version 2.3.9.40 or higher
Function	IEC 61850 server
Object types	IEC 61850-7-4 and IEC 61400-25
Data sets	static and dynamic
Reporting	buffered and unbuffered
Supported controllers	
IEC 61850 Server	0750-0872
IEC 61850 Server and Client	0750-0880/0025-0001
	0750-0880/0025-0002
	0750-0880/0040-0001
	0750-8202/0025-0001
	0750-8202/0025-0002
	0750-8202/0040-0001
	0750-8206/0025-0001
	0750-8206/0040-0001
	0750-8207/0025-0001

WAGO BACnet Configurator

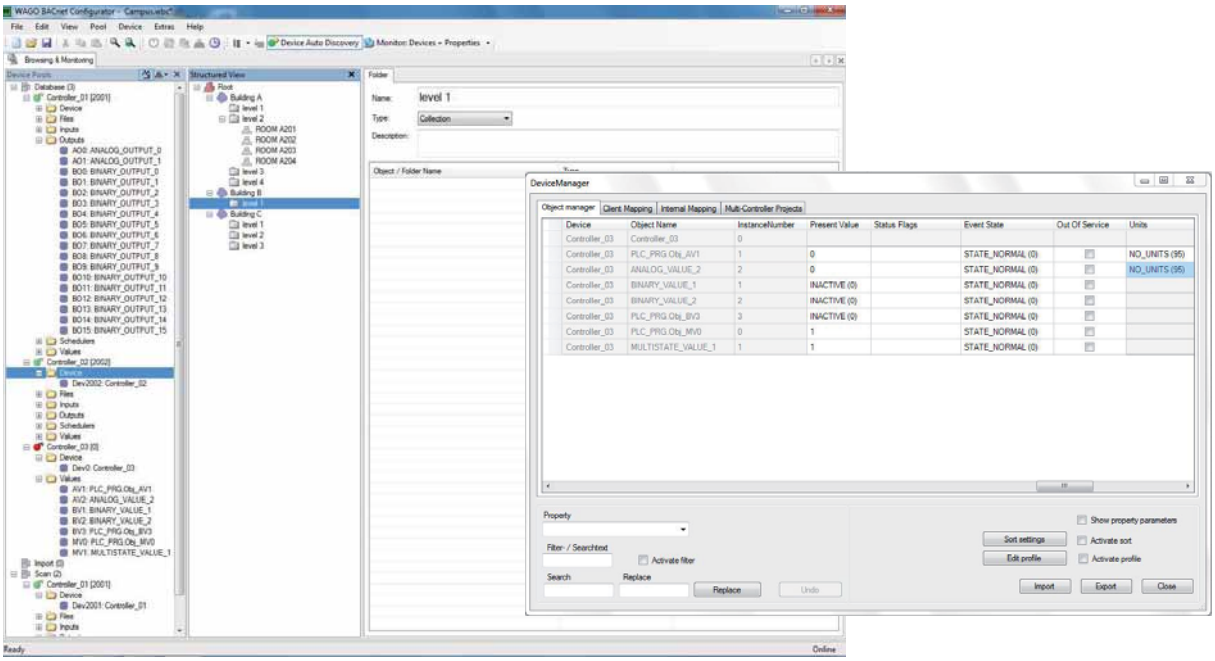

WAGO's BACnet Configurator is an independent commissioning, configuration and management software.
The configurator fully supports the BACnet-specific functions of WAGO's 750-829, 750-830 and 750-831 BACnet Controllers.

The configurator creates and configures WAGO BACnet Controllers and sets up data exchange between the IEC application and BACnet objects. Import and export functions allow further processing of the configuration data.

For integration into existing BACnet networks, the BACnet devices available can be scanned, displayed in a browser and data exchange can be implemented for WAGO devices.

Among the configurator's capabilities are the logical structuring of the project and network, addressing of the controller and client/server configuration in every WAGO BACnet Controller.

The devices, objects and configuration data are displayed in a logical, structured network and browser view.

Depending on the function used, both online and offline operation is possible.

The configurator displays all configuration data. To edit BACnet objects, the configurator offers specific table views in which the corresponding properties of the object can be modified. Typical table editing functions, e.g., search/replace, sort, filter and show/hide, are available. The user can upload the updated configuration data to one or more controllers and save as a project.

The configurator provides a browser to view the BACnet object properties and modify current parameters (communicate value changes, write property values, utilize BACnet services, etc.).
Additionally, a Transaction Log window is available for client services.

Description
WAGO BACnet Configurator
The WAGO BACnet Configurator can be downloaded for free at:
www.wago.com

Technical Data	
Supported operating systems	Windows XP (SP3 or later), Windows 7

Windows® is a registered trademark of Microsoft Corporation.

DALI Configurator

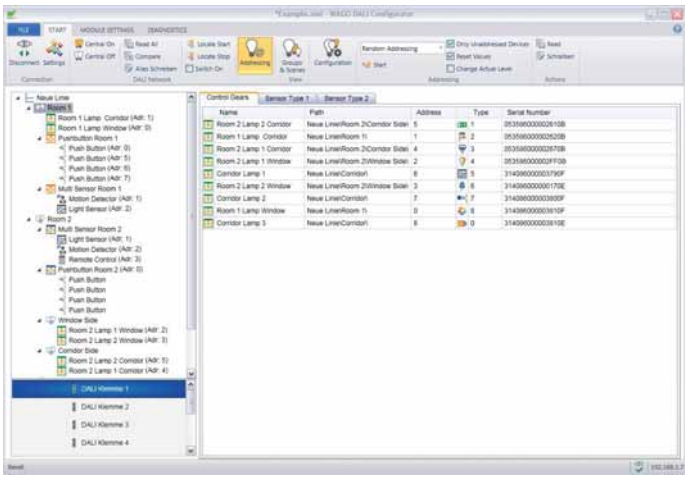

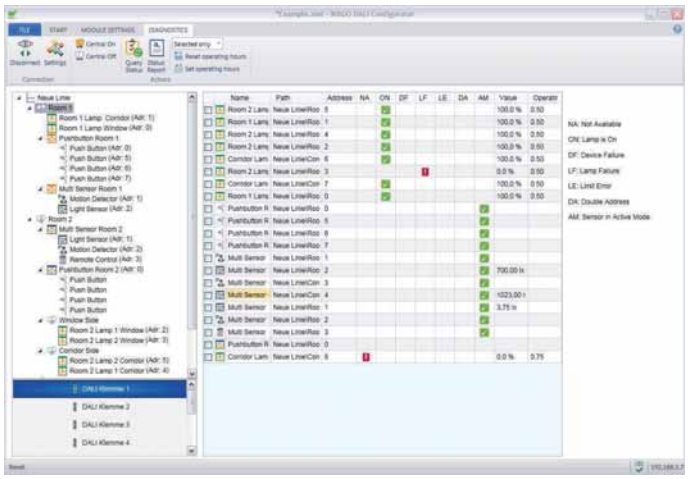

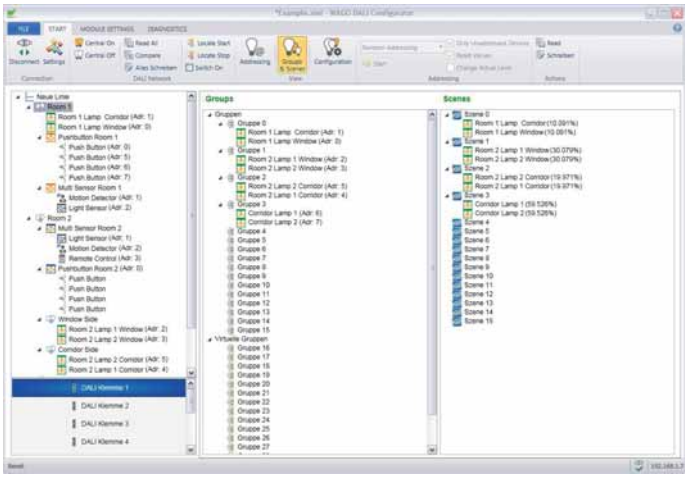

The DALI Configurator simplifies commissioning of a DALI network via 753-647 DALI Multi-Master Module. The configurator is available as a stand-alone Windows application or for use with WAGO-I/O-*CHECK* software.

It provides the following functions: easy commissioning, configuration, service, support and maintenance of a DALI network. Comprehensive backup & restore features, as well as an offline configuration option for the entire DALI network (including ECGs and sensors) are available.

Description
DALI Configurator
The DALI Configurator is available as part of WAGO-I/O-*CHECK* (Version 3.5.1 or higher) or as a stand-alone application (www.wago.com).

Technical Data	
Features	Stand-alone software or for use with WAGO-I/O-*CHECK*
Commissioning function	Addressing
	Scene and group formation
	Control gear configuration
	Offline configuration (option)
	Import and export functions
	Project documentation
Service, support and maintenance functions	Backup & Restore
	Status messages from defective ECGs/lamps
	Double-address identification
	Operating hours display
	Diagnostics report
Windows-compliant user interface	Multiple selection for time-optimized configuration
	Provides clear network view in a tree-like structure
	Supports different commissioning workflows

LON® Configurator

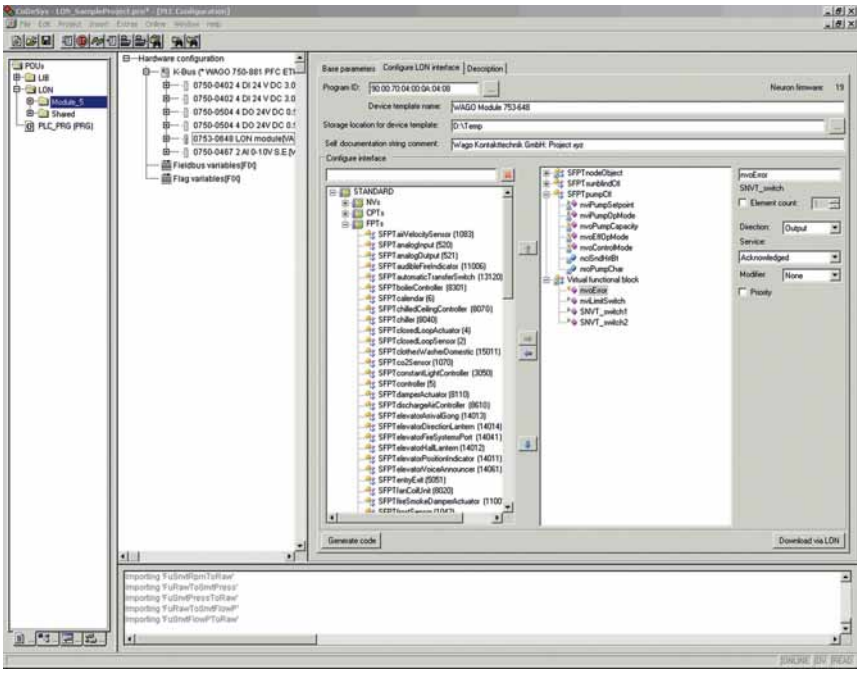

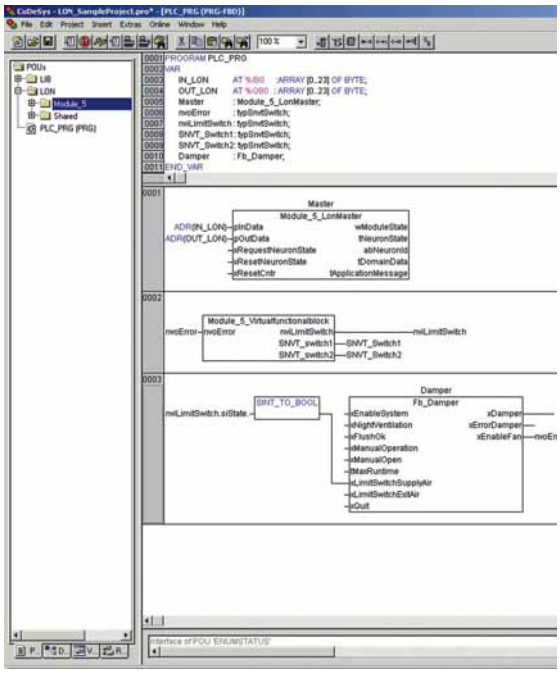

The LON® Configurator is an integral part of the WAGO-I/O-*PRO* IEC 61131-3 programming environment. The configurator supports both the 753-648 LON® Module's LonWorks® network interface configuration and WAGO-I/O-*PRO* project integration.

Network variables of any type can be defined. In addition to standard network variable types (SNVTs) and standard configuration property types (SCPTs), user-defined types (UNVTs/UCPTs) and LonMark® functional profiles (FPTs) are also supported. Network variables are defined using the types and objects of the LonMark® resources installed on your computer.

IEC 61131-3 function blocks are automatically created in the IEC application, simplifying operation. The function blocks represent the LON® network interface in the IEC application. When starting the control unit, both the network variable interface and configuration data are automatically downloaded into the I/O module.
An external interface file (XIF) is created for offline configuration in a network management tool.

Description
LON® Configurator
The LON® Configurator is available as part of WAGO-I/O-*PRO* (Version 2.3.9.34 or higher)

Technical Data
Features
• Integral part of the WAGO-I/O-*PRO* programming software
• Defines and implements a LON® network interface
• Automatically generates IEC 61131-3 function blocks to represent the LON® network interface within an IEC application
• Downloads both network interfaces and configuration data when starting the control unit
• Checks configuration
• Generates XIF files

WAGO ETS Plug-In

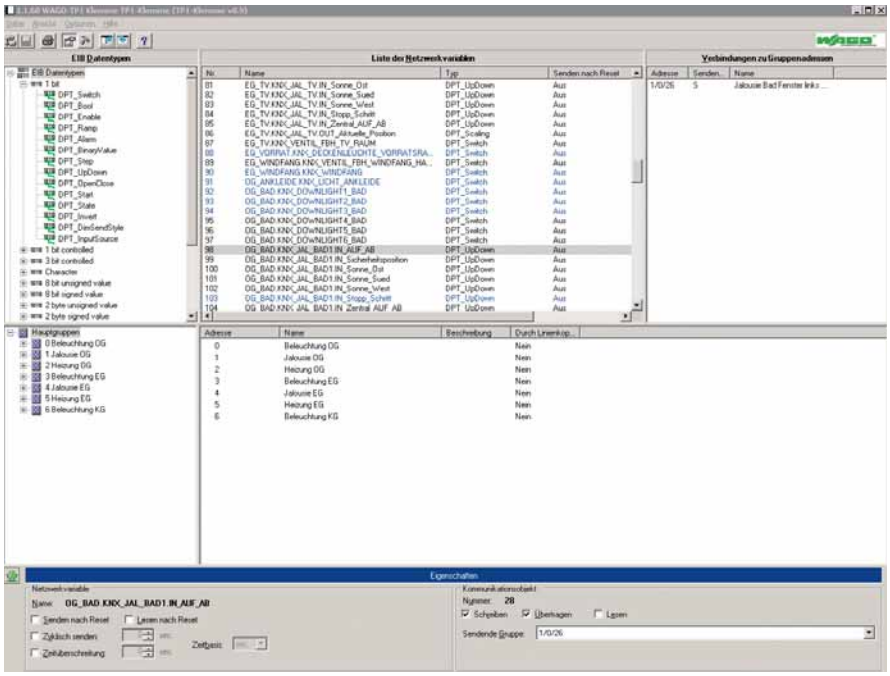

The WAGO ETS Plug-In is a WAGO ETS product database extension that allows the use of WAGO devices, such as the 753-646 KNX/EIB/TP1 Module, 750-889 KNX IP Controller and KNXnet/IP Router (consisting of KNX/EIB/TP1 Module and KNX IP Controller).

The software's enhanced structure offers intuitive navigation, providing both new and experienced ETS users with exceptional usability.

The WAGO ETS Plug-In provides three clear user interfaces for various devices. Depending on the mode selected, either the KNX/EIB/TP1 Module, KNX IP Controller or the KNXnet/IP Router (IP Controller with KNX/EIB/TP1 Module in first position) are supported.

In the graphical interfaces, device parameters are easy to configure and only the options pertaining to the selected device are displayed.

During software development, creating a convenient and time-saving graphical user interface was heavily emphasized – and this is beneficial when assigning communication objects to group addresses.

Two different Drag & Drop options and a context menu with an automatic filter function are available, enabling users to select their preferred method.

Description

WAGO ETS Plug-In

The WAGO ETS Plug-In can be downloaded for free at:
www.wago.com

Technical Data

Supported operating systems	Windows XP, Windows 7
Miscellaneous	The plug-in requires the ETS product database.
Configuration	
KNX/EIB/TP1 Module	Loading/assignment of IEC variables (communication objects)
	Creation/configuration of group addresses
KNX IP Controller	Assigning IP addresses
	Downloading the IEC application into the controller
	Loading/assignment of IEC variables (communication objects)
	Creation/configuration of group addresses
KNXnet/IP Router	Assigning IP addresses
	Setting a routing multicast address
	Filtering/transmitting telegrams

Windows® is a registered trademark of Microsoft Corporation.

Runtime Software — Libraries

e!COCKPIT (based on CODESYS 3)

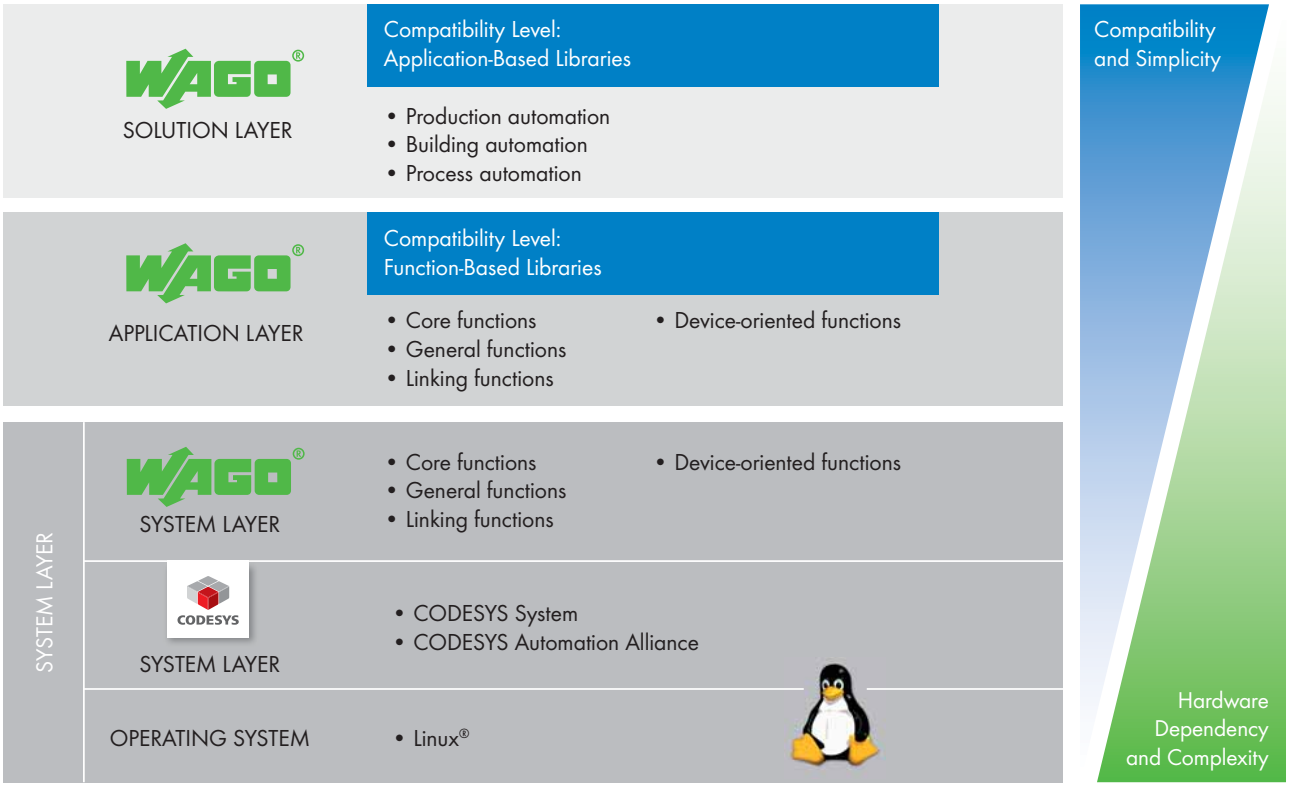

Runtime Software Controls the Machine

Machines and systems are controlled by runtime software that determines behavior, while enabling both operation and current status monitoring for the user. It also transmits operating data to higher-level systems.

Unlike engineering software, runtime software operates continuously – it is a part of the machine and ensures correct operation.

Ready-to-Use Function Blocks Save Development Time

Comprehensive, tried-and-tested software function blocks (IEC libraries) expedite development. Thus, ***e!****COCKPIT* is supplemented with comprehensive IEC libraries.

Essentially, the libraries are divided into three abstraction layers:

- The solution layer primarily contains complete, easy-to-use software solutions for production, building and process automation.
- The application layer contains technology functions, e.g., communication, that are ideal for convenient application.
- The system layer provides experts with complete system access.

The upper layers are separated by compatibility levels. Essentially, this enables software to be developed independently of the hardware it will be used on. This provides the greatest degree of flexibility in selecting the right device for the right application, while retaining a uniform software base. It also provides investment security.

Description
Function modules and libraries

Technical Data	
System requirements	***e!COCKPIT*** Software
	Item No. 2759-0101/1110-xxxx

Runtime Software — Libraries

WAGO-I/O-*PRO* (based on CODESYS 2)

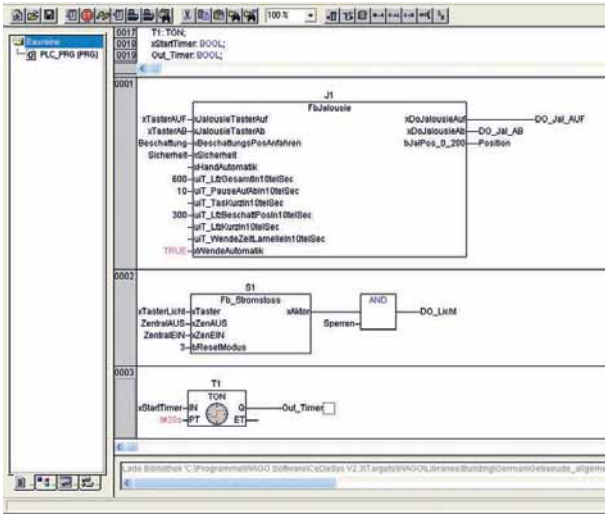

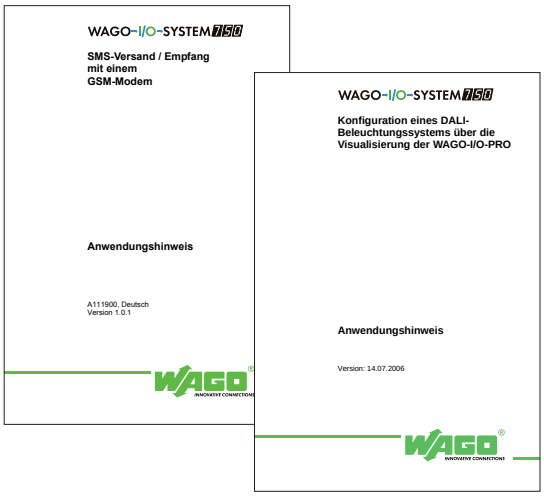

The library contains custom function blocks for building automation; these accelerate the programming of building applications.

- Lighting
- Dimmers
- Lighting scenes
- Lighting control
- Sun protection
- Shading
- And other applications

The application notes contain function blocks (FB) for communication applications.

- KNX/EIB
- DALI
- EnOcean radio technology
- MODBUS
- M-Bus
- MP-Bus
- SMI
- LonWorks®
- Email
- SMS
- And other applications

Description
Room applications

Technical Data	
System requirements	WAGO-I/O-*PRO* V2.3 Software, Item No.: 759-333

Description
Application Notes
Download: Current application notes can be downloaded at: www.wago.com

Runtime Software — Libraries

WAGO-I/O-*PRO* (based on CODESYS 2)

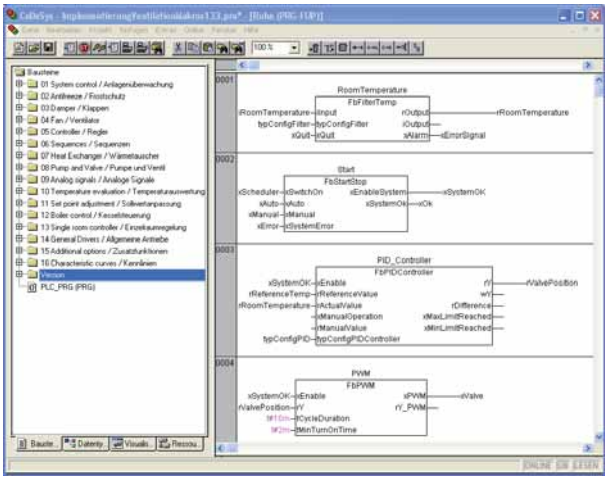

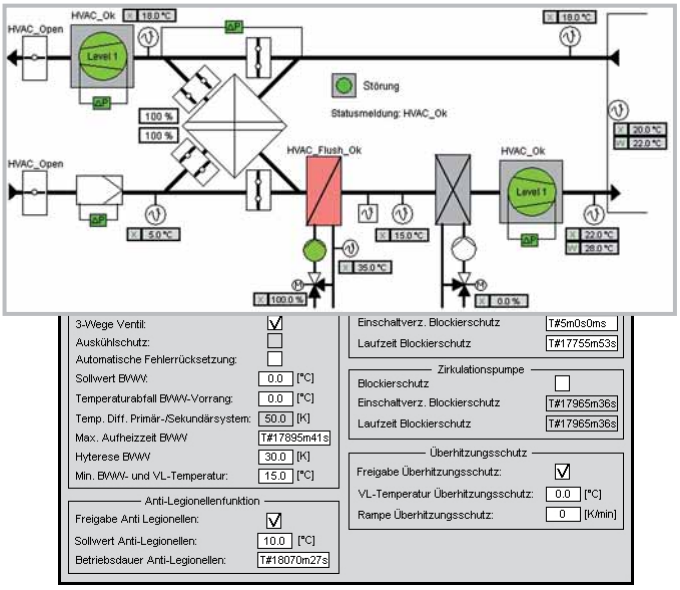

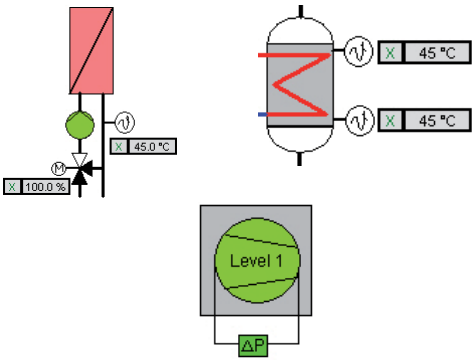

Graphical elements for HVAC applications

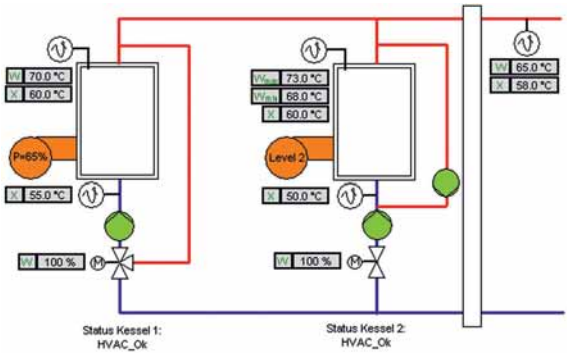

Boiler sequence control

The library contains function blocks (FB) to create automation applications for complex heating, ventilation and air-conditioning systems (HVAC).

These include: fault monitoring, starter circuits, monitoring frost protection systems, fan control (stepped/continuous), air mixture valve control, air heater/cooler control, cascade control of room/feed air temperature, free night cooling, summer/winter compensators, enthalpy calculations, PID controllers, filter monitoring, blockage protection, heating circuit control, heat recovery control, boiler control (stepped/continuous), boiler sequence, domestic hot water control, start/stop optimization, humidification and dehumidification (climate) and more.

- District heating transfer station macros
- Boiler macros
- Heating circuit macros
- Drinking water heating macros
- Ventilation macros

Description
HVAC

Technical Data	
System requirements	WAGO-I/O-*PRO* V2.3 Software, Item No.: 759-333

Description
System macros
Download: Current application notes can be downloaded at: www.wago.com

WAGO WebVisu App

for mobile system operation/monitoring

Using the WAGO WebVisu App, you can access CODESYS 2 WebVisu websites on mobile devices. The desired system or machine can then be operated and monitored at any time. Up to 100 controllers can be predefined for direct and quick access via the URL.

WAGO WebVisu App is available for free as an iOS version for iPhones and iPads in the Apple "App Store", and as an Android version for smartphones and tablets in the "Google Play" store.

Note: An overview of the supported WAGO controllers, operating manuals and application notes can be found on our website or at www.wago.com/webvisu.

QR Code for WebVisu App

Simply scan the QR code with your mobile device and you are automatically directed to the WebVisu App in the "App Store" or "Google Play".

Download on the App Store

GET IT ON Google play

Trademarks

Apple, the Apple logo, iPhone, iPad and iPod touch are registered trademarks of Apple Inc. registered in the USA and other countries. "App Store" is a service mark of Apple Inc.

Google Play™ is a registered trademark of Google Inc.

Description
WAGO WebVisu App

Technical Data	
System requirements	
Operating system	iOS Version 4.3 or higher
	Android Version 2.2 or higher
Compatibility	iPhone, iPad and iPod touch
	Android smartphones and tablets

TO-PASS® Web Portal

WEB portal for visualizing and archiving measured values and messages

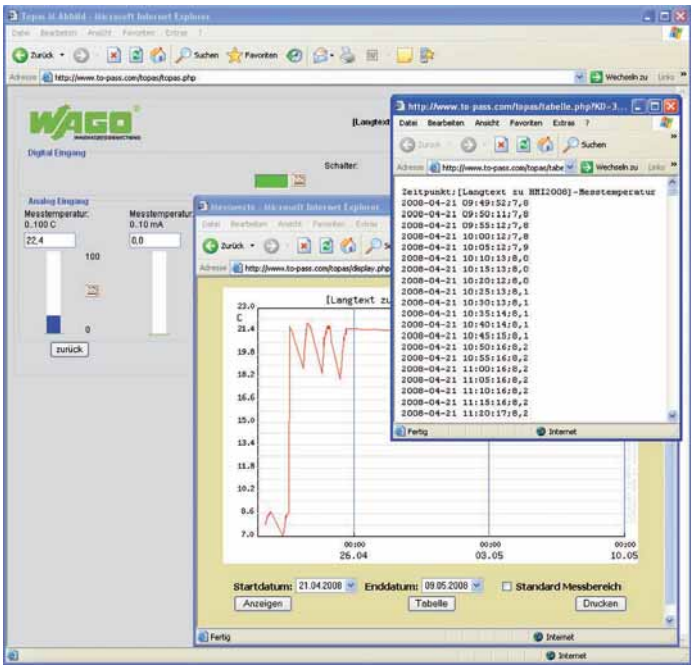

The *TO-PASS*® product family is designed for wireless communication of signals and messages. Connection is established via the GSM global mobile radio network. Beyond other communication channels (e.g., email, SMS or fax), the devices can also transmit data to a Web server. This allows the creation of a permanent GPRS connection that's similar to a dedicated line.

The process image (i.e., states and values of all digital and analog inputs of a *TO PASS*® telecontrol module) is transmitted to the Web server with a time stamp at a configurable interval and then stored in the database. Standard data loggers and the cumbersome process of reading out data are no longer necessary. Controlling and managing data is simplified by using an Internet browser via: http://www.to pass.com.
With the base module, a user receives a designated area on the Web portal. Access is protected with a username and password. Depending on the expansion level (starter, standard, unlimited), a varying number of devices can log into the portal.

The data recorder function allows digital, analog and MODBUS data from connected devices to be recorded and displayed from 90 minutes to 512 days. Data can also be exported in CSV format.

The "Admin" option is an addition to the base module. It allows the user to assign additional usernames with passwords, as well as customers and devices with different access authorizations.
The "Alarm" option is an addition to the base module. It allows the module to display and administer alarms generated from analog, digital and MODBUS values. Using analog values, up to four limit values can be configured for each measurement. An alarm list allows all alarms to be displayed and acknowledged.
This option also allows the user to configure the recipients and the time that an alarm will be sent to them via SMS or e-mail.

The usage rights for the base module with "Admin" and "Alarm" options must be purchased once. Afterward, just a low flat-rate fee will be charged monthly.

Description	Item No.	Pack. Unit
***TO-PASS*® Web Portal "Basic Unlimited"** [1]	**761-700**	1
***TO-PASS*® WEB Portal "Basic Starter"** [2]	**761-700/000-005**	1
***TO-PASS*® Web Portal "Basic Standard"** [3]	**761-700/000-020**	1
***TO-PASS*® Web Portal, monthly user fees, payable one year in advance**	**761-701**	1
***TO-PASS*® Web Portal "Admin Unlimited"** [1]	**761-702**	1
***TO-PASS*® Web Portal "Admin Starter"** [2]	**761-702/000-005**	1
***TO-PASS*® Web Portal "Admin Standard"** [3]	**761-702/000-020**	1
***TO-PASS*® Web Portal "Alarm Unlimited"** [1]	**761-703**	1
***TO-PASS*® Web Portal "Alarm Starter"** [2]	**761-703/000-005**	1
***TO-PASS*® Web Portal "Alarm Standard"** [3]	**761-703/000-020**	1
Individual *TO-PASS*® Web Portal	**761-704**	1

[1] Unlimited number of devices
[2] Maximum 5 devices
[3] Maximum 20 devices

Technical Data	
System requirements	
Web Browser	Microsoft® Internet Explorer with Internet access
User administration	via user name and password
No. of devices	unlimited
Device activation	via Internet
Configuration of measured values	via Internet
History of measured values	unlimited number of data sets
Display of measured values	Table and graphical display
Evaluation of measured values	Graphical evaluation of measured values
Export of measured values	CSV format (MS Excel compatible)

Internet Explorer is a registered trademark of Microsoft Corporation

WAGO Telecontrol Gateway

Connection to control system acc. to IEC 60870-5-101/-104

Max. 12 RS-232/-485 I/O modules and ISDN/analog modem (19'' plug-in card)

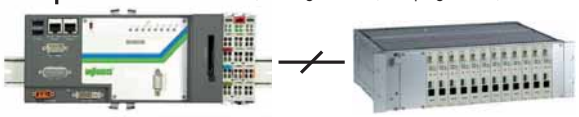

Max. 64 substations can be connected via fieldbus controller acc. to IEC 60870-5:
- 101 via analog, GSM or ISDN dial-up connections
- 103 via RS-485 I/O module
- 104 via ETHERNET or GPRS

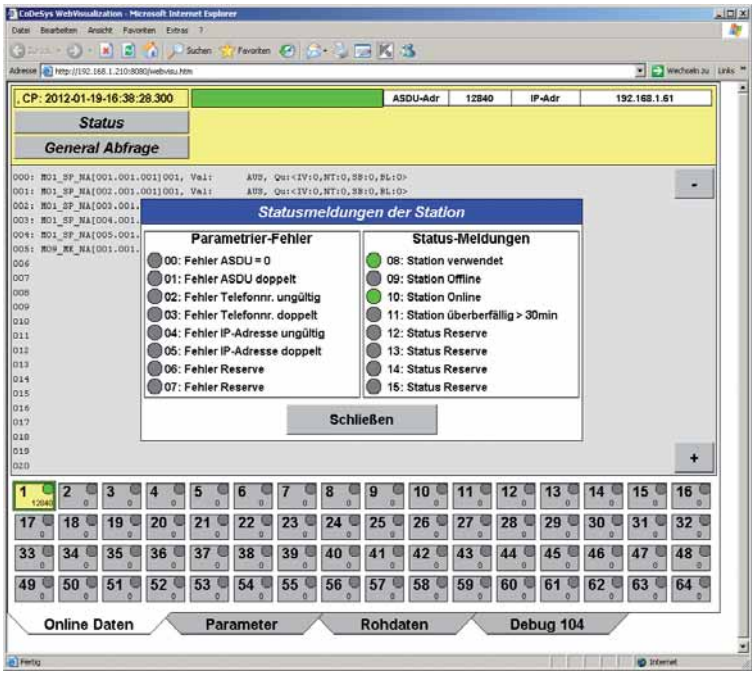

Parameter setting and diagnostics via Web server

WAGO Telecontrol Gateway (WTG), in connection with the controllers mentioned below, is a gateway software for communication between a maximum of 64 telecontrol substations (IEC 60870-5-101/-103/-104) and a control system equipped with an interface (IEC 60870-5-101/-104).

This gateway is ideal for connecting both telecontrol substations and for control system applications restricted by a transmission protocol or the number of connections.

In addition to data transfer bundling, the WAGO Telecontrol Gateway also supports coordination of incoming and outgoing analog, GSM or ISDN dial-up connections to substations.

Accessories for WAGO Telecontrol Gateway:
I/O-IPC-C10 Telecontrol: 758-874/000-130 or Controller 750-8202/025-001
RS-232/485 Module, WAGO-I/O-SYSTEM: 750-652
End Module, WAGO-I/O-SYSTEM: 750-600
19" rack, INSYS: 11-02-05-01-01.006
19" plug-in card (ISDN modem), INSYS: 11-02-05-03-01.003
Alternative: 19" plug-in card (analog modem), INSYS: 11-02-05-02-03.003

Telecontrol substation with ISDN dial-up modem:
WAGO Telecontroller: 750-872; additional 750/753 Series I/O Modules, if necessary
End Module, WAGO-I/O-SYSTEM: 750-600
RS-232 Null Modem Cable: 761-9011
ISDN modem (DIN-rail mount), INSYS ISDN-TA 4.0: 11-02-01-02-00.018

Telecontrol substation with an analog dial-up modem
WAGO Telecontroller: 750-872; additional 750/753 Series I/O Modules, if necessary
End Module, WAGO-I/O-SYSTEM: 750-600
RS-232 Null Modem Cable: 761-9011
Analog modem (DIN-rail mount), INSYS modem 56k 4.2: 11-02-01-01-40.039

Telecontrol substation with GSM connection
WAGO Telecontroller: 750-872; additional 750/753 Series I/O Modules, if necessary
End Module, WAGO-I/O-SYSTEM: 750-600
RS-232 Null Modem Cable: 761-9011
GSM modem (DIN-rail mount), INSYS GSM 4.3: 11-02-01-03-01.042
Magnetic foot antenna for INSYS GSM 4.3: 31-01-01.007

Telecontrol substation with DSL/ETHERNET connection:
WAGO Telecontroller: 750-872
Alternative: WAGO Telecontroller: 750-880/025-001
Additional 750/753 Series I/O Modules, if necessary
End Module, WAGO-I/O-SYSTEM: 750-600

Description	Item No.	Pack. Unit
WAGO Telecontrol Gateway Software		
for 758-874/000-130	**759-200**	1
for 750-8202/025-001	**759-200/000-002**	1

Technical Data	
Number of I/O modules	
for 758-874/000-130	max. 12 750-652 Modules
for 750-8202/025-001	max. 4 750-652 Modules
Number of connectable telecontrol substations	
for 758-874/000-130	max. 64
for 750-8202/025-001	max. 16

Accessories

Description	Item No.	Pack. Unit
WAGO USB communication cable, length 2.5 m	750-923	1
WAGO USB communication cable, length 5 m	750-923/000-001	1
USB communication cable	756-4101/042-030	1

Description	Item No.	Pack. Unit
USB adapter with 1 m connection cable	761-9005	1

Description	Item No.	Pack. Unit
RS-232 communication cable	750-920	1

Description	Item No.	Pack. Unit
Bluetooth® Adapter	750-921	1

PERSPECTO®

***PERSPECTO*® Web Panels**

- Web-based visualization
- 8.9 cm ... 30.7 cm (3.5″ ... 12″)

***PERSPECTO*® Control Panels**

- Merging of control and visualization
- 8.9 cm ... 38.1 cm (3.5″ ... 15″)

Section 3.1 ▶

PFC200

- Maximum performance in a minimum space
- High processing speed
- Additional operating controls (e.g., start/stop switch)
- Based on Linux® also in high-level language

Section 3.2 ▶ ▶

Programmable Fieldbus Controllers

- Decentralized intelligence based on fieldbus couplers
- Programmable to IEC 61131-3
- WAGO-I/O-SYSTEM 750, modular

Section 3.3 ▶ ▶ ▶

Programmable Fieldbus Controller XTR

For demanding applications where the following are critical:

- Extreme temperature stability
- Immunity to interference and impulse-voltage withstand
- Vibration and shock resistance

	Page
General Product Information	34
Versions	35
Item Number Keys	35
Interfaces and Configurations	36
Application and Installation Instructions	37
Standards and Rated Conditions	37

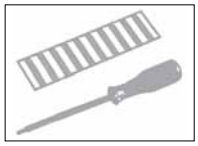

	Screen Diagonal	Screen Resolution	ETHERNET/ MODBUS TCP	CANopen	Others	Item No.	
PERSPECTO®, Web Panels	8.9 cm (3.5″)	320 x 240 pixels			Web browser	762-1035	38
	14.5 cm (5.7″)	320 x 240 pixels			Web browser	762-1057	38
	26.4 cm (10.4″)	640 x 480 pixels			Web browser	762-1104	39
	30.7 cm (12.1″)	800 x 600 pixels			Web browser	762-1121	39
PERSPECTO®, Control Panels	8.9 cm (3.5″)	320 x 240 pixels	x	M/S	MODBUS RTU	762-3035/000-001	40
	14.5 cm (5.7″)	320 x 240 pixels	x	M/S	MODBUS RTU	762-3057/000-001	40
	26.4 cm (10.4″)	640 x 480 pixels	x	M/S	MODBUS RTU	762-3104/000-001	41
	30.7 cm (12.1″)	800 x 600 pixels	x	M/S	MODBUS RTU	762-3121/000-001	41
	38.1 cm (15″)	1024 x 768 pixels	x		MODBUS RTU	762-3150/000-001	41
	38.1 cm (15″)	1024 x 768 pixels	x	M/S	MODBUS RTU	762-3150/000-003	41

Accessories

Memory card, connecting cables, mounting sets — 42

M: Master, S: Slave

PERSPECTO®
General Product Information

PERSPECTO® is WAGO's comprehensive panel system for operating and monitoring process data for machines, systems and control technology.

Speed through Optimization
Enhanced runtime systems and programs provide consistently high performance.

Programmability Optional
The control panels are programmable in the five programming languages of the IEC 61131 international standard. In addition to pure programming, the WAGO-I/O-*PRO* programming system built on the CODESYS international standard allows offline simulation, fieldbus configuration, recipe management and much more.

Web Visualization
Displaying a visualization in a Web browser makes flexible options available. In addition to the *PERSPECTO*® Web panel version, visualizations can be displayed on nearly any device with a browser including smartphones and tablets using the WebVisu app.

Flexibility through Design Options
Available in a variety of sizes as a Web, visualization or automation panel model, *PERSPECTO*® provides solutions to suit any customer need.

Adaptable Design
Customer-driven designs and reconfigurable displays enable *PERSPECTO*® monitors and panels to seamlessly integrate into virtually any application.

Fully Integrated Visualization
Complete integration of the visualization system in a control system allows direct integration of variables.
In addition, created masks can easily be reused in various controller configurations.

- Short boot time
- High computing power
- Outstanding energy efficiency
- Monitor sizes from 3.5″ to 15″
- Flat design
- Multiple interfaces
- Optional IEC-61131-compatible control functionality

PERSPECTO®
Versions

***PERSPECTO*® WP,**
Web Panel

Featuring specialized software, the Web Panel functions as a Web browser, connecting a controller with its own Web server. The CODESYS 2.3 Web visualization has been specifically optimized for the Web Panel.

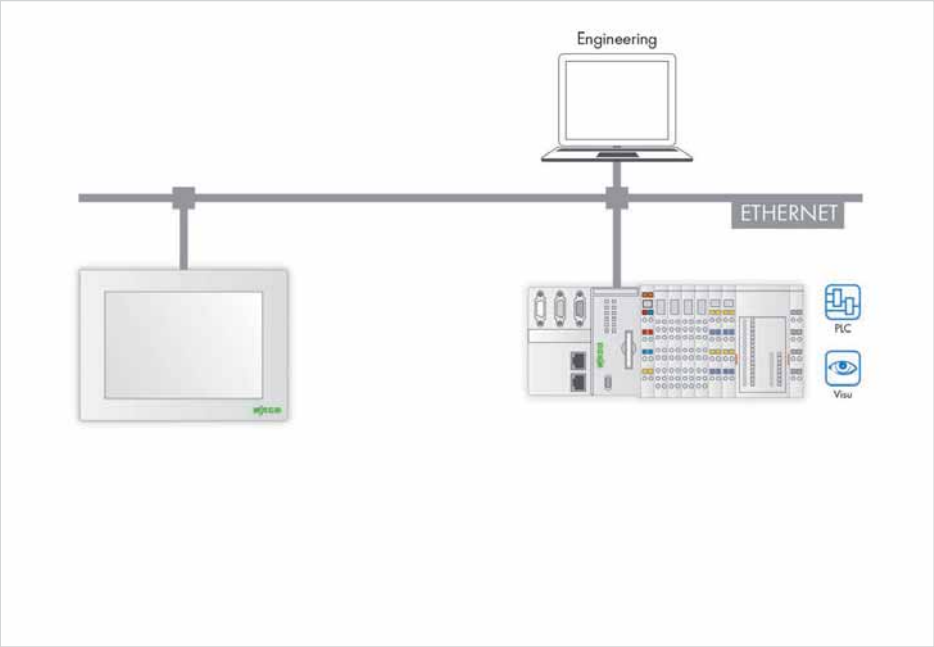

***PERSPECTO*® CP,**
Control Panel with Target Visualization

The Control Panel (CP) with Target Visu (TV) features full CODESYS runtime. The CODESYS development environment allows full application programming in CODESYS. Existing projects may be almost entirely converted and upgraded.

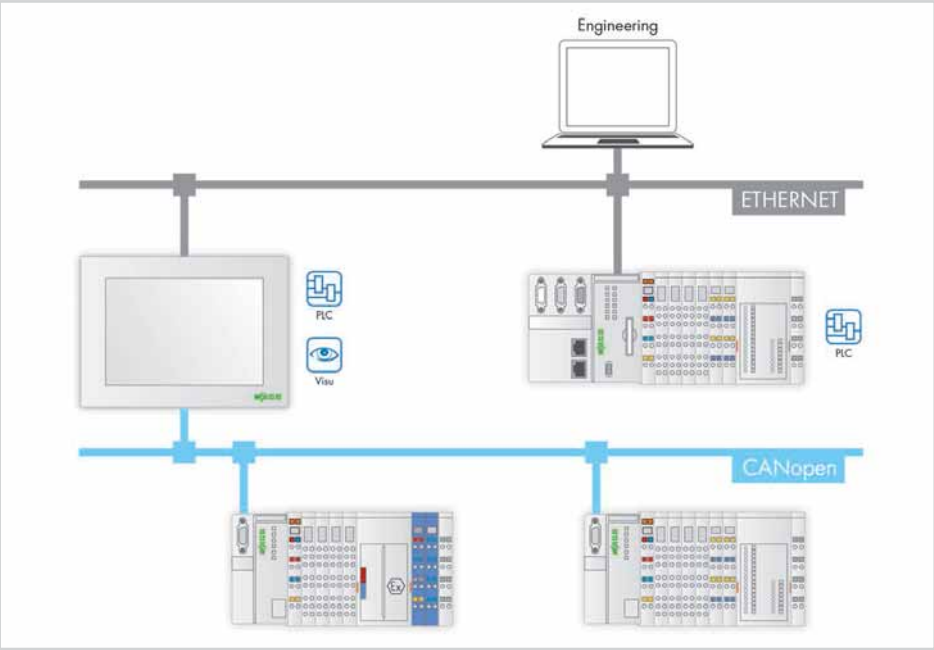

Item Number Keys

Explanation of the components for the item number key

Item No. : 762-xyyy

- Screen size
  - x035 = 8.9 cm (3.5″)
  - x057 = 14.5 cm (5.7″)
  - x104 = 26.4 cm (10.4″)
  - x121 = 30.7 cm (12.1″)
  - x150 = 38.1 cm (15″)
- Web Panel = 1
  Control Panel = 3
- Series

Out of Sight, but Always in Reach

PERSPECTO® offers multiple interfaces, connection ports and other important elements on the back side for maximized connectivity with minimized clutter.

10.4″ version

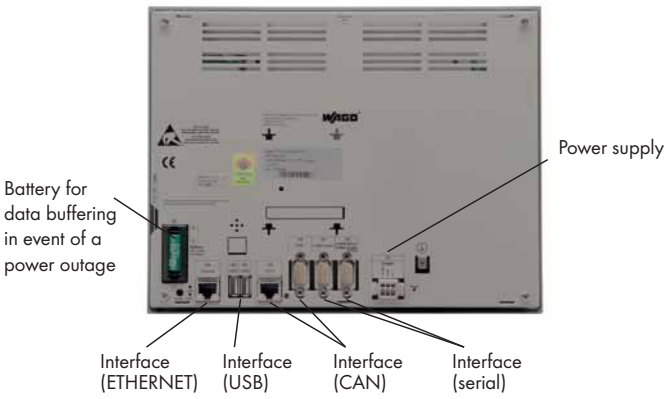

Interface (USB): 2 x USB 2.0 Host (Type A)
Interface (ETHERNET): 1 x 10/100 Mbit RJ-45
Interface (CAN): 1 x CAN0 RJ-45, 1 x CAN1 D-Sub 9
Interface (serial): 1 x RS-232 D-Sub 9, 1 x RS-232 + RS-485/-422 D-Sub 9

3.5″ version

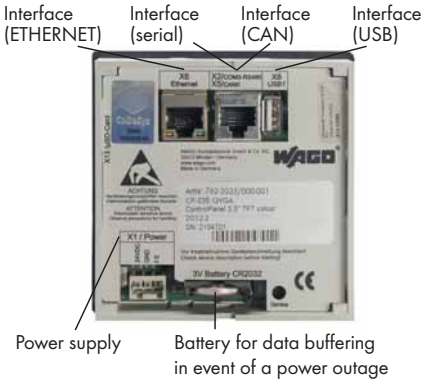

Interface (USB): 1 x USB 2.0 Host (Type A)
Interface (ETHERNET): 1 x 10/100 Mbit RJ-45
Interface (CAN): 1 x CANopen RJ-45
Interface (serial): RS-485 integrated in CAN

12.1″ version

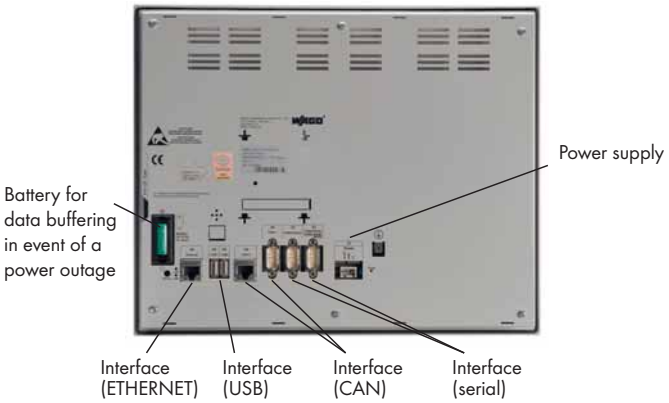

Interface (USB): 2 x USB 2.0 Host (Type A)
Interface (ETHERNET): 1 x 10/100 Mbit RJ-45
Interface (CAN): 1 x CAN0 RJ-45, 1 x CAN1 D-Sub 9
Interface (serial): 1 x RS-232 D-Sub 9, 1 x RS-232 + RS-485/-422 D-Sub 9

5.7″ version

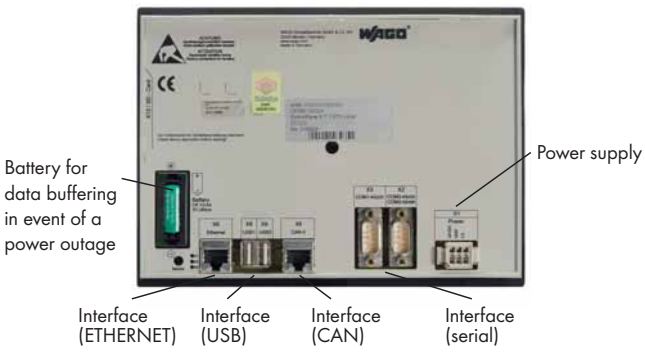

Interface (USB): 2 x USB 2.0 Host (Type A)
Interface (ETHERNET): 1 x 10/100 Mbit RJ-45
Interface (CAN): 1 x CANopen RJ-45
Interface (serial): 1 x RS-232 D-Sub 9, 1 x RS-232 + RS-485 D-Sub 9

15″ version

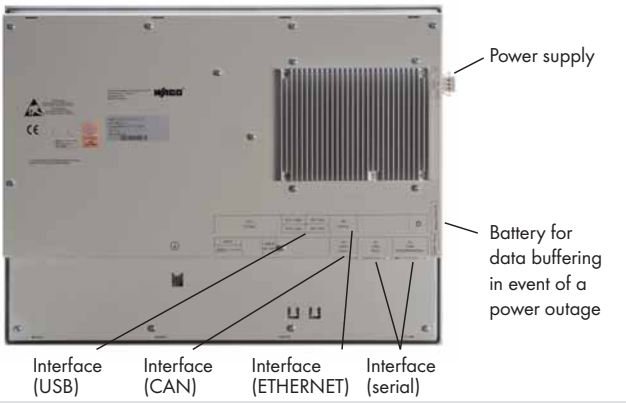

Interface (USB): 4 x USB 2.0 Host (Type A)
Interface (ETHERNET): 1 x 10/100 Mbit RJ-45
Interface (CAN): Option (RJ-45)
Interface (serial): 1 x RS-232 D-Sub 9, 1 x RS-232 + RS-485/-422 D-Sub 9

Protection type: Front IP65, back IP20

Standards and Rated Conditions

General Specifications	
HBT (Half Brightness Time)	50000 hrs.
Operating system	Windows CE
Control elements	Touch, analog, resistive
Power supply	24 VDC (18 V ... 30 V)
Operating temperature	0 °C ... +50 °C
Storage temperature	-10 °C ... +60 °C
Relative humidity (without condensation)	10 % ... 85 %
Protection type	Front IP65, back IP20

PERSPECTO WP - Web Panel

Specifically configured as a Web browser, the Web Panel connects to controllers with their own Web servers. The CoDeSys 2.3 Web visualization has been specially optimized for the Web Panel.

Software configuration:
- **Internet browser**
- **Java virtual machine**
- **Panel configuration software**

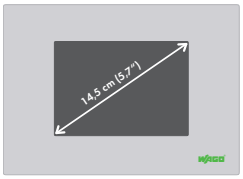

Description	Description	Item No.	Pack. Unit	Description	Item No.	Pack. Unit
***PERSPECTO* WP, Web Panel**	WP 35 QVGA	**762-1035**	1	WP 57 QVGA	**762-1057**	1

Technical Data

Display	TFT	CSTN
Screen size (diagonal)	8.9 cm (3.5")	14.5 cm (5.7")
Display colors	32.768 colors	4.096 colors
Graphics resolution	320 x 240 pixels	320 x 240 pixels
Contrast ratio	250:1	35:1
Viewing angle, horizontal/vertical	-45° ... 45° / -15° ... 35°	-10° ... 30° / -30° ... 30°
Brightness	560 cd/m²	350 cd/m²
HBT *	50000 hrs.	50000 hrs.
Operating system	Windows CE 6.0	Windows CE 6.0
Processor	32-bit ARM9 200 MHz	32-bit ARM9 200 MHz
RAM / Flash / SRAM	64 Mbytes / 64 Mbytes / 1 MB	64 Mbytes / 64 Mbytes / 1 MB
Memory expansion	MicroSD card (max. 2 GB)	SD card (max. 2 GB)
Panel	Touch screen (analog, resistive)	Touch screen (analog, resistive)
Light transmission	Typ. 80 %	Typ. 75 %
Durability	100.000 stylus touches	100.000 stylus touches
Interfaces (USB)	1 x USB 2.0 Host (Type A)	2 x USB 2.0 Host (Type A)
Interface (ETHERNET)	1 x 10/100 Mbits RJ45	1 x 10/100 Mbits RJ45
Interface (CAN)	1 x CANopen RJ-45	1 x CANopen RJ-45
Interface (serial)	RS-485 integrated in CAN	1 x RS-232 D-Sub 9, 1 x RS-232 + RS-485 D-Sub 9
Front panel	Plastic, polyester film	Plastic, polyester film
Housing material	plastic	plastic
Dimensions (W x H x L)	96 x 96 x 29	208 x 150 x 42
Panel cutout (W x H)	91 x 91	198 x 140
Fixing	4 x clamping elements	4 x clamping elements
Power supply	24 V DC (18 V ... 30 V)	24 V DC (18 V ... 30 V)
Max. input current (24 V)	250 mA	250 mA
Operating power	8 - 12 W	8 - 12 W
Operating temperature	0 °C ... +50 °C	0 °C ... +50 °C
Storage temperature	-10 °C ... +60 °C	-10 °C ... +60 °C
Relative air humidity (no condensation)	10 - 85 %	10 - 85 %
Weight	165 g	570 g
Degree of protection	Front IP65, back IP20	Front IP65, back IP20
Approvals	CE, cULus UL 508, GL, KC	CE, cULus UL 508, GL, KC
Accessories	see page 42	see page 42

CAN and serial interfaces are not supported by software

* The HBT (Half Brightness Time) is defined as the LED chip brightness decreases to 50% than original brightness, based an Ta = 25 ± 2 °C; RH = 60 ± 10 % condition.

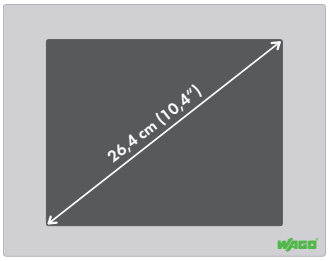

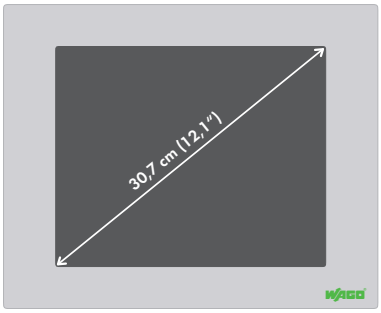

Description	Description	Item No.	Pack. Unit	Description	Item No.	Pack. Unit
***PERSPECTO* WP, Web Panel**	WP 104 VGA	**762-1104**	1	WP 121 SVGA	**762-1121**	1

Technical Data

Display	TFT	TFT
Screen size (diagonal)	26.4 cm (10.4")	30.7 cm (12.1")
Display colors	65.536 colors	65.536 colors
Graphics resolution	640 x 480 pixels	800 x 600 pixels
Contrast ratio	500:1	500:1
Viewing angle, horizontal/vertical	-65° ... 65° / -45° ... 65°	-65° ... 65° / -75° ... 45°
Brightness	430 cd/m²	400 cd/m²
HBT *	50000 hrs.	50000 hrs.
Operating system	Windows CE 5.0	Windows CE 5.0
Processor	32-bit XScale 520 MHz	32-bit XScale 520 MHz
RAM / Flash / SRAM	64 Mbytes / 32 Mbytes / 1 MB	64 Mbytes / 32 Mbytes / 1 MB
Memory expansion	CF card (max. 2 GB)	CF card (max. 2 GB)
Panel	Touch screen (analog, resistive)	Touch screen (analog, resistive)
Light transmission	Typ. 80 %	Typ. 80 %
Durability	10 million finger touches	10 million finger touches
Interfaces (USB)	2 x USB 2.0 Host (Type A)	2 x USB 2.0 Host (Type A)
Interface (ETHERNET)	1 x 10/100 Mbits RJ45	1 x 10/100 Mbits RJ45
Interface (CAN)	1 x CAN0 RJ-45, 1 x CAN1 D-Sub 9	1 x CAN0 RJ-45, 1 x CAN1 D-Sub 9
Interface (serial)	1 x RS-232 D-Sub 9, 1 x RS-232 + RS-485/-422 D-Sub	1 x RS-232 D-Sub 9, 1 x RS-232 + RS-485/-422 D-Sub
Front panel	Anodized aluminum, natural, polyester film	Anodized aluminum, natural, polyester film
Housing material	Sheet steel, painted	Sheet steel, painted
Dimensions (W x H x L)	284 x 222 x 46	330 x 268 x 47
Panel cutout (W x H)	268 x 206	312 x 250
Fixing	6 x clamping elements	6 x clamping elements
Power supply	24 VDC (18 V ... 30 V)	24 VDC (18 V ... 30 V)
Max. input current (24 V)	500 mA	500 mA
Operating power	10 - 18 W	10 - 18 W
Operating temperature	0 °C ... +50 °C	0 °C ... +50 °C
Storage temperature	-10 °C ... +60 °C	-10 °C ... +60 °C
Relative air humidity (no condensation)	10 - 85 %	10 - 85 %
Weight	2100 g	2600 g
Degree of protection	Front IP65, back IP20	Front IP65, back IP20
Approvals	CE, KC	CE, KC
Accessories	see page 42	see page 42

CAN and serial interfaces are not supported by software

* The HBT (Half Brightness Time) is defined as the LED chip brightness decreases to 50% than original brightness, based an Ta = 25 ± 2 °C; RH = 60 ± 10 % condition.

PERSPECTO CP, Control-Panel mit Target Visualisierung

In addition to HMI runtime, the control panel also features PLC runtime, making it a full-fledged automation device. It provides configurable functions for operation and monitoring, and can independently process control tasks.

Software configuration:
- **WAGO runtime (PLC, HMI)**
- **Panel configuration software**
- **CoDeSys PLC with CoDeSys Target Visualization**

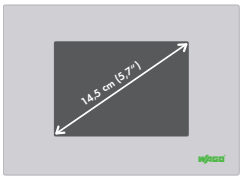

Description	Description	Item No.	Pack. Unit	Description	Item No.	Pack. Unit
***PERSPECTO* CP, Control Panel with Target Visualisation**	CP 35 QVGA TV	**762-3035/000-001**	1	CP 57 QVGA TV	**762-3057/000-001**	1
Technical Data						
Display	TFT			TFT		
Screen size (diagonal)	8.9 cm (3.5")			14.5 cm (5.7")		
Display colors	32768 colors			4096 colors		
Graphics resolution	320 x 240 pixels			320 x 240 pixels		
Contrast ratio	250:1			35:1		
Viewing angle, horizontal/vertical	-45° ... 45° / -15° ... 35°			-10° ... 30° / -30° ... 30°		
Brightness	560 cd/m²			350 cd/m²		
HBT *	50000 hrs.			50000 hrs.		
Operating system	Windows CE 6.0			Windows CE 6.0		
Processor	32-bit ARM9 200MHz			32-bit ARM9 200MHz		
RAM / Flash / SRAM	64 MB / 64 Mbytes / 1 MB			64 MB / 64 Mbytes / 1 MB		
Program memory	1024 Kbytes			1024 Kbytes		
Data memory	1024 Kbytes			1024 Kbytes		
Non-volatile memory (retain)	128 KB			128 KB		
Memory expansion	MicroSD (max. 2 GB)			SD card (max. 2 GB)		
Panel	Touch screen (analog, resistive)			Touch screen (analog, resistive)		
Light transmission	Typ. 80 %			Typ. 75 %		
Durability	100,000 activations with touch pen			100,000 activations with touch pen		
Interfaces (USB)	1 x USB 2.0 Host (type A)			2 x USB 2.0 Host (type A)		
Interface (ETHERNET)	1 x 10/100 Mbits RJ45			1 x 10/100 Mbits RJ45		
Interface (CAN)	1 x CAN RJ-45			1 x CAN RJ-45		
Interface (serial)	RS-485 integrated into CAN			1 x RS-232 D-Sub 9, 1 x RS-232 + RS-485 D-Sub 9		
Front panel	Plastic, polyester film			Plastic, polyester film		
Housing material	plastic			plastic		
Dimensions (W x H x L)	96 x 96 x 29			208 x 150 x 42		
Panel cutout (W x H)	91 x 91			198 x 140		
Fixing	4 x clamping elements			4 x clamping elements		
Power supply	24 VDC (18 - 30 V)			24 VDC (18 - 30 V)		
Max. input current (24 V)	250 mA			250 mA		
Operating power	8 - 12 W			8 - 12 W		
Operating temperature	0 °C ... +50 °C			0 °C ... +50 °C		
Storage temperature	-10 °C ... +60 °C			-10 °C ... +60 °C		
Relative air humidity (no condensation)	10 - 85 %			10 - 85 %		
Weight	165 g			570 g		
Degree of protection	Front IP65, back IP20			Front IP65, back IP20		
Approvals	CE, cULus UL 508, GL, KC			CE, cULus UL 508, GL, KC		
Accessories	see page 42			see page 42		

* The HBT (Half Brightness Time) is defined as the LED chip brightness decreases to 50% than original brightness, based an Ta = 25 ± 2 °C; RH = 60 ± 10 % condition.

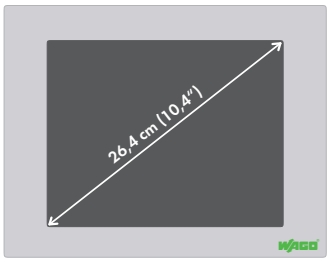

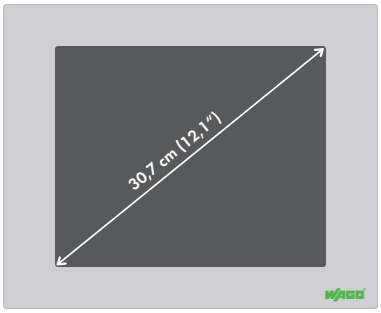

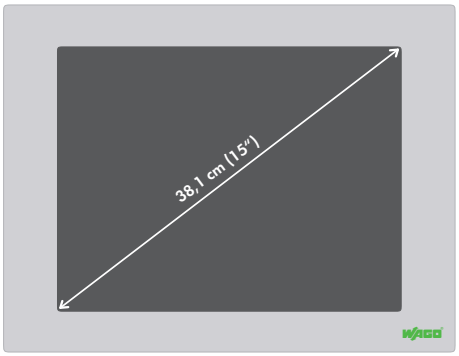

Description	Item No.	Pack. Unit	Description	Item No.	Pack. Unit	Description	Item No.	Pack. Unit
CP 104 VGA TV	**762-3104/000-001**	1	CP 121 SVGA TV	**762-3121/000-001**	1	CP 150 XGA TV	**762-3150/000-001**	1
						CP 150 XGA CAN TV	**762-3150/000-003**	1
TFT			TFT			TFT		
26.4 cm (10.4")			30.7 cm (12.1")			38.1 cm (15")		
65536 colors			65536 colors			16 million colors		
640 x 480 pixels			800 x 600 pixels			1024 x 768 pixels		
500:1			500:1			500:1		
-65° ... 65° / -45° ... 65°			-65° ... 65° / -75° ... 45°			-75° ... 75° / -60° ... 60°		
430 cd/m²			400 cd/m²			250 cd/m²		
50000 hrs.			50000 hrs.			50000 hrs.		
Windows CE 5.0			Windows CE 5.0			Windows CE 6.0		
32-bit XScale 520 MHz			32-bit XScale 520 MHz			Intel Atom® N270; 1.6 GHz		
64 MB / 32 Mbytes / 1 MB			64 MB / 32 Mbytes / 1 MB			256 MB / 128 Mbytes / -		
1024 Kbytes			1024 Kbytes			1024 Kbytes		
1024 Kbytes			1024 Kbytes			1024 Kbytes		
128 KB			128 KB			128 KB		
CF card (max. 2 GB)			CF card (max. 2 GB)			CF card (max. 2 GB)		
Touch screen (analog, resistive)			Touch screen (analog, resistive)			Touch screen (analog, resistive)		
Typ. 80 %			Typ. 80 %			Typ. 80 %		
10 million activations with finger			10 million activations with finger			35 million activations with finger		
2 x USB 2.0 Host (type A)			2 x USB 2.0 Host (type A)			4 x USB 2.0 Host (type A)		
1 x 10/100 Mbits RJ45			1 x 10/100 Mbits RJ45			1 x 10/100/1000 Mbits RJ45		
1 x CAN0 RJ-45, 1 x CAN1 D-Sub 9			1 x CAN0 RJ-45, 1 x CAN1 D-Sub 9			Option (RJ-45)		
1 x RS-232 D-Sub 9, 1 x RS-232 + RS-485/-422 D-Sub			1 x RS-232 D-Sub 9, 1 x RS-232 + RS-485/-422 D-Sub			1 x RS-232 D-Sub 9, 1 x RS-232 + RS-485/-422 D-Sub		
Anodized aluminum, natural, polyester film			Anodized aluminum, natural, polyester film			Anodized aluminum, natural, polyester film		
Sheet steel, painted			Sheet steel, painted			Sheet steel, painted		
284 x 222 x 46			330 x 268 x 47			398 x 306 x 77		
268 x 206			312 x 250			383 x 291		
6 x clamping elements			6 x clamping elements			6 x clamping elements		
24 VDC (18 - 30 V)			24 VDC (18 - 30 V)			24 VDC (18 - 30 V)		
500 mA			500 mA			1300 mA		
10 - 18 W			10 - 18 W			28 - 35 W		
0 °C ... +50 °C			0 °C ... +50 °C			0 °C ... +45 °C		
-10 °C ... +60 °C			-10 °C ... +60 °C			-10 °C ... +60 °C		
10 - 85 %			10 - 85 %			10 - 85 %		
2100 g			2600 g			4500 g		
Front IP65, back IP20			Front IP65, back IP20			Front IP65, back IP20		
CE, KC			CE, KC			CE, KC		
see page 42			see page 42			see page 42		

Accessories

Memory cards, connection cables and mounting sets

Memory Cards	Item No.	Pack. Unit	Technical Data
CF memory card, 1 GB	**758-879/000-000**	1	Flash memory: 1 GByte
			Write/Read cycles max.:
			Single: 20 Mbytes/s (max.) / 10 Mbytes/s (max.);
			Dual: 40 Mbytes/s (max.) / 20 Mbytes/s (max.)
			MTBF: 300,000 hrs.
			Service life: 2,000,000 program/operating cycles
			Operating temperature: -40 °C ... +85°C
			Storage temperature: -55 °C ... +95 °C
			Relative humidity (without condensation): 95 %
			Dimensions (mm) W x H x L: 42.8 x 36.4 x 3.3
			Vibration resistance: acc. to IEC 60068-2-6
SD memory card, 2 GB	**758-879/000-001**	1	Memory: 2 GByte
			Write/Read cycles max.: 16 Mbytes/s / 22 Mbytes/s
			MTBF: 4,000,000 hrs.
			Service life: 2,000,000 program/operating cycles
			Operating temperature: -45 °C ... +90°C
			Storage temperature: -45 °C ... +90 °C
			Relative humidity (without condensation): 95 %
			Dimensions (mm) W x H x L: 24 x 32 x 2.1
			Vibration resistance: 15 G
			Shock resistance: 50 G (operating), 1000 G (not operating)
			Data transmission rate: Up to 22 Mbytes/s
MicroSD memory card, 1 GB	**758-879/000-002**	1	Memory: 1 GByte
			Write/Read cycles max.: 18 Mbytes/s / 16 Mbytes/s
			MTBF: 5,000,000 hrs.
			Service life: 2,000,000 program/operating cycles
			Operating temperature: -40 °C ... +85°C
			Storage temperature: -40 °C ... +85 °C
			Relative humidity (without condensation): 95 %
			Dimensions (mm) W x H x L: 15 x 11 x 1
			Vibration resistance: 15 G
			Shock resistance: 1000 G Data transmission rate: Up to 18 Mbytes/s

Connection Cables	Item No.	Pack. Unit
DVI-D cable, 3 m	**758-879/000-100**	1
USB A-B cable, 3 m	**758-879/000-101**	1

Befestigungsset (als Ersatzteil für das dem Produkt beiliegende Set)	Item No.	Pack. Unit
Mounting set for WP, CP 35	**758-879/000-300**	1
Mounting set for WP, CP 57	**758-879/000-301**	1
Mounting set for WP, CP 104	**758-879/000-302**	1
Mounting set for WP, CP 121	**758-879/000-303**	1
Mounting set for CP 150	**758-879/000-304**	1

Controllers

◀ Section 2

PERSPECTO® Control Panels

- Merging control and visualization
- 8.9 cm ... 38.1 cm (3.5″ ... 15″)

Section 3.1

PFC200

- Maximum performance in a minimum space
- High processing speed
- Additional operating controls (e.g., start/stop switch)
- Based on Linux® also in high-level language

Section 3.2

Programmable Fieldbus Controllers

- Decentralized intelligence based on fieldbus couplers
- Programmable to IEC 61131-3
- WAGO-I/O-SYSTEM 750, modular

Section 3.3

Programmable Fieldbus Controller XTR

For demanding applications where the following are critical:

- Extreme temperature stability
- Immunity to interference and impulse-voltage withstand
- Vibration and shock resistance

Controllers
Overview

			Page
	***PERSPECTO*®, Control Panels** Combining controller and visualization into one device	**2**	33
	PFC200 Scalable IP20 controller family with various interfaces	**3.1**	47
	Programmable Fieldbus Controllers IP20 Microcontrollers	**3.2**	61
	Programmable Fieldbus Controller XTR IP20 Microcontrollers for eXTReme environmental conditions	**3.3**	107

- Fieldbus-independent – compatible with all standard fieldbus protocols & ETHERNET standards
- Scalable performance – Fieldbus Controllers, Control Panels, PFC200
- Programmable to IEC 61131-3
- Flexible platform adapts to diverse applications and environments
- Combinable with the WAGO-I/O-SYSTEM 750 – modular, compact, versatile

PFC200

◀ Section 2

PERSPECTO® Control Panels

- Merging control and visualization
- 8.9 cm ... 38.1 cm (3.5″ ... 15″)

PFC200

- Maximum performance in a minimum space
- High processing speed
- Additional operating controls (e.g., start/stop switch)
- Based on Linux® also in high-level language

Section 3.2 ▶

Programmable Fieldbus Controllers

- Decentralized intelligence based on fieldbus couplers
- Programmable to IEC 61131-3
- WAGO-I/O-SYSTEM 750, modular

Section 3.3 ▶▶

Programmable Fieldbus Controller XTR

For demanding applications where the following are critical:

- Extreme temperature stability
- Immunity to interference and impulse-voltage withstand
- Vibration and shock resistance

	Page
General Product Information	48
Versions	49
Interfaces and Configurations	49
Installation Instructions	50
Item Number Keys	51
Standards and Rated Conditions	51

	CPU	ETHERNET MODBUS TCP	PROFIBUS	CANopen	Others	Description	Item No.	Page
	Cortex A8, 600 MHz	x	S	M/S	MODBUS RTU	PFC200 CS 2ETH RS CAN DPS	750-8206	52
						PFC200 CS 2ETH RS CAN DPS /T Extended temperature range: -20 °C ... +60 °C	750-8206/025-000	
	Cortex A8, 600 MHz	x	S	M/S	MODBUS RTU IEC 60870-5 IEC 61850 IEC 61400-25	PFC200 CS 2ETH RS CAN DPS TELE/T Extended temperature range: -20 °C ... +60 °C	750-8206/025-001	52
	Cortex A8, 600 MHz	x		M/S	MODBUS RTU	PFC200 CS 2ETH RS CAN	750-8204	54
						PFC200 CS 2ETH RS CAN /T Extended temperature range: -20 °C ... +60 °C	750-8204/025-000	
	Cortex A8, 600 MHz	x		M/S		PFC200 CS 2ETH CAN	750-8203	56
						PFC200 CS 2ETH CAN /T Extended temperature range: -20 °C ... +60 °C	750-8203/025-000	
	Cortex A8, 600 MHz	x			MODBUS RTU	PFC200 CS 2ETH RS	750-8202	58
						PFC200 CS 2ETH RS/T Extended temperature range: -20 °C ... +60 °C	750-8202/025-000	
	Cortex A8, 600 MHz	x			MODBUS RTU IEC 60870-5 IEC 61850 IEC 61400-25	PFC200 CS 2ETH RS Telecontrol/T PFC200 CS 2ETH RS Telecontrol ECO/T Extended temperature range: -20 °C ... +60 °C	750-8202/025-001 750-8202/025-002	58

M: Master, S: Slave

PFC200
General Product Information

PFC200:
Maximum Performance in a Minimum Space

As the newest member of the WAGO control family, the PFC200 Controller excels with high processing speed and multiple interfaces for parallel communication. All PFC200 Controllers feature two ETHERNET ports and – depending on the model – additional interfaces. The CANopen, PROFIBUS DP and MODBUS TCP/UPD/RTU protocols provide flexible connection to fieldbus systems and external input/output devices. These fieldbus systems can be easily configured directly in WAGO's easy-to-use **e!***COCKPIT* development environment. The ETHERNET interfaces with an integrated switch also support all major IT protocols. In addition to multiple interfaces, the PFC200 provides memory for your applications thanks to the internal Flash memory and an integrated interface for SD/SDHC cards.

Telecontrol technology
Standardized telecontrol protocols according to IEC 60870-5, IEC 61850 or IEC 61400-25 ensure use of the PFC200 in telecontrol technology.

Link between Process Data and IT Application
The PFC200 ideally combines real-time requirements with IT functionality. It supports both MODBUS/TCP and ETHERNET/IP for use in industrial environments. HTTP, SNTP, SNMP, FTP, BootP, DHCP, DNS, telnet, SSH and other protocols simplify integration into IT environments. Integrated Web pages and Web-based visualization provide IT applications with real-time process data. Furthermore, the PLC incorporates library functions for email, SOAP, ASP, IP configuration, ETHERNET sockets and file system.

Security on Board
The topics of ETHERNET communication and security are closely linked. To provide PFC200 users with a high level of security, mechanisms for secure connections such as HTTPS, FTPS , SSH and SSL/TLS are standard.

Modular Expandability
With the WAGO-I/O-SYSTEM 750, the PFC200 can be expanded to almost any input/output interface. The modular, DIN-rail mount design allows for easy installation, expansion and modification of the I/O node. The streamlined design reduces installation errors. In addition, proven CAGE CLAMP® technology offers fast, vibration-proof and maintenance-free connections that are independent of operator skill. Depending on the I/O module's granularity, the field peripherals can be directly wired using 1-, 2-, 3- or 4-wire technology.

Maximum Reliability and Ruggedness
The PFC200 is engineered and tested for use in the most demanding environmental conditions (e.g., temperature cycling, shock/vibration loading and ESD) according to the highest standards. Spring Pressure Connection Technology guarantees reliable operation. Integrated QA measures in the production process and 100 % function testing ensure consistent quality.

- Programmable to IEC 61131-3
- Can be combined with high-level languages
- Linux® real-time operating system
- Robust and maintenance-free
- Integrated IT security standards

PFC200
Versions

Extended Temperature Range

Industrial automation technology is typically operated in temperatures ranging from 0 °C to 55 °C. However, there are applications, e.g., telecontrol, that require an extended temperature range. These version are available in an extended temperature range of -20 °C to +60 °C.

ECO

The ECO version of the PFC200 limits the number of stackable I/O modules to four.

Interfaces and Configurations

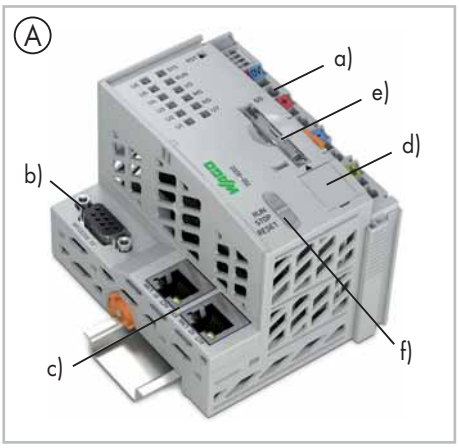

- Includes supply module (a)
- Technical differences on the connection level (b)
- ETHERNET 2 x RJ-45 (c)
- Service port (d)
- SD card slot for external storage media (e)
- Mode switch (f)

Housing design (A)
- W x H* x L (mm) 79 x 65 x 100

Housing design (B)
- W x H* x L (mm) 112 x 65 x 100

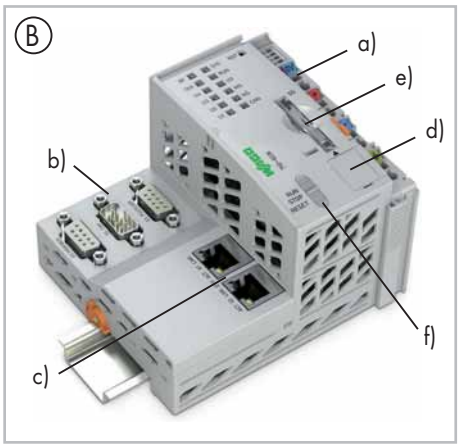

*Height from upper edge of the DIN-rail

Power Supply

The internal electronics are powered by the PFC200's supply module. The power supply to the field-side supply is electrically isolated. The division enables a separate supply for sensors and actuators. The I/O modules' connections automatically lead to transferring the supply voltages. Supply modules with diagnostics enable additional power supply monitoring. This ensures a flexible, user-specific supply design for a station. The current supply to the electronics is limited by a maximum value. If the sum of the internal current demand of all the I/O modules should exceed this value, an additional bus supply module is necessary. Even in this case, power supply to the field-side supply of 10 A may not be exceeded. However, different power supply modules allow a new power supply, formation of potential groups and the implementation of emergency stops.

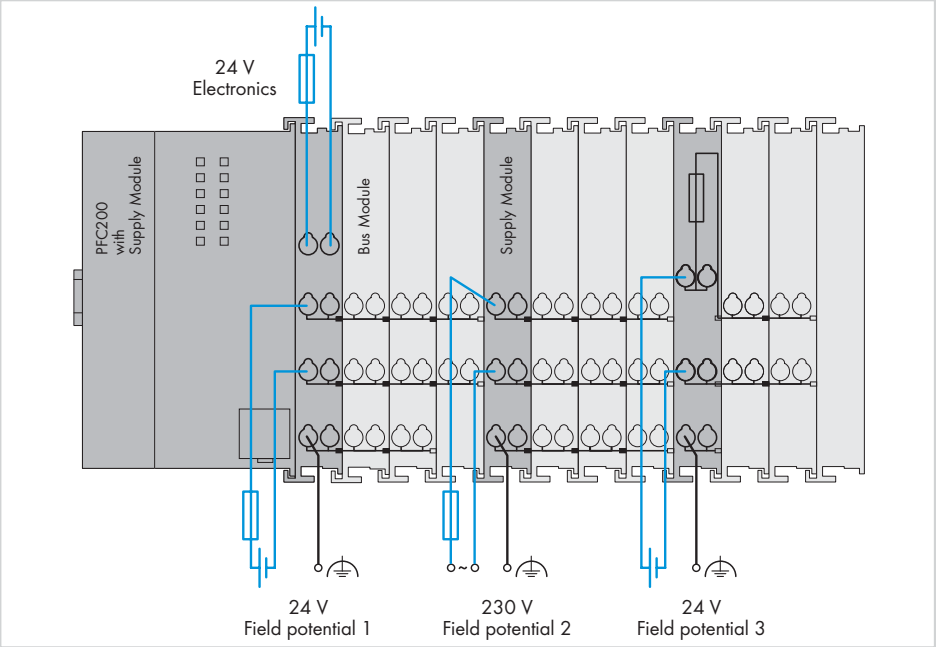

Notes

Additional steps must be implemented based on where the I/O-System is installed:

- Specific power and field-side power supply filters (750-624/626) are required for **marine** and onshore/offshore applications.
- A specific supply module (750-625) is required to operate **intrinsically safe Ex i modules**. Additionally, both a supply module and a field-side power supply filter are recommended when operating **intrinsically safe Ex i modules for marine** and onshore/offshore applications.
- As part of operating **safety-related I/O modules,** PELV/SELV power supply units must be used for 24 VDC supply of electronics and field. In addition, specific power and field-side power supply filters must be provided (750-626).

Please refer to the manual for details about the power supply's design.

Explanation of the components for the item number key

Item No. : 750-82xx

02: 2 x ETHERNET, RS-232
03: 2 x ETHERNET, CAN
04: 2 x ETHERNET, RS-232, CAN
06: 2 x ETHERNET, RS-232, CAN, PROFIBUS-DP Slave

.../025-yyy: Extended temperature range of -20 °C ... +60 °C
y00: Standard
y01: Telecontrol standard
y02: Telecontrol ECO

Standards and Rated Conditions

General Specifications	
Operating voltage	24 VDC (-25 % ... +30 %)*; *for all shipbuilding-certified PFC200s
Operating temperature	0 °C ... +55 °C
Operating temperature for versions with an extended temperature range	-20 °C ... +60 °C
Storage temperature	-25 °C ... +85 °C
Storage temperature for versions with extended temperature range	-40 °C ... +85 °C
Relative humidity (without condensation)	95 %
Operating altitude	without temperature derating: 0 m ... 2000 m; with temperature derating: 2000 m ... 5000 m (0.5 K/100 m); max.: 5000 m
Degree of contamination	2 acc. to IEC 61131-2
Vibration resistance	0.5g (4g for all shipbuilding-certified PFC200s) acc. to IEC 60068-2-6
Shock resistance	15g acc. to IEC 60068-2-27
EMC immunity to interference	acc. to EN 61000-6-2 / marine applications
EMC emission of interference	acc. to EN 61000-6-3 / EN 61000-6-4 / marine applications
Protection type	IP20
Mounting position	any
Type of mounting	DIN-rail
Housing material	Polycarbonate, polyamide 6.6
Stress due to contaminants	acc. to IEC 60068-2-42 and IEC 60068-2-43
Maximum pollutant concentration with a relative humidity < 75 %	SO2 ≤ 25 ppm; H2S ≤ 10 ppm
Connection technology	CAGE CLAMP®
Conductor cross-section; stripped lengths	0.08 mm² ... 2.5 mm²/28 ... 14 AWG; 8 ... 9 mm/0.33 in.
Current via power jumper contacts	max. 10 A

PLC – PFC200 Controller

PFC200 CS 2ETH RS CAN DPS

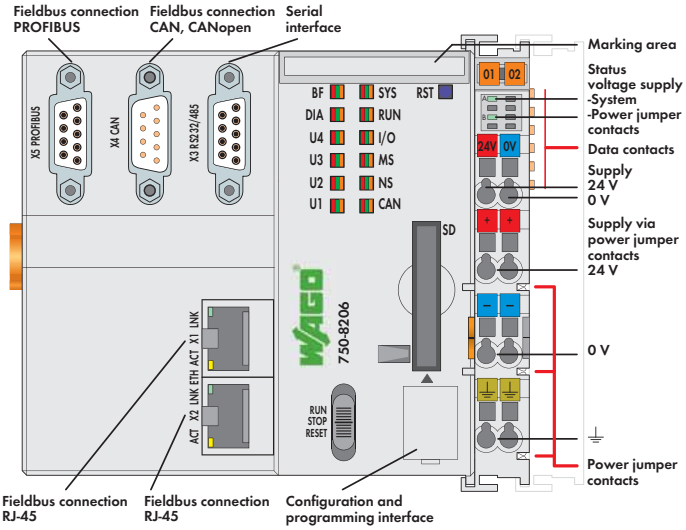

The PFC200 Controller is a compact PLC for the modular WAGO-I/O-SYSTEM. Besides network and fieldbus interfaces, the controller supports all digital, analog and specialty modules found within the 750/753 Series.
Two ETHERNET interfaces and integrated switch enable line topology wiring. An integrated Web server provides the user with configuration options and status information from the PFC200.
Besides the processing industry and building automation, typical markets for the PFC200 include the standard machine and plant industries (e.g., packaging, bottling, textiles, production and metal & wood processing).

Programmable to IEC 61131-3
- Programmable via WAGO-I/O-PRO V2.3
- Direct connection of WAGO I/O modules
- 2 x ETHERNET (configurable), RS-232/-485, CAN, CANopen, PROFIBUS DP Slave
- Linux operating system with RT-Preemption patch
- Configuration via CODESYS, ***e!****COCKPIT* or Web-based management interface
- Maintenance-free

Description	Item No.	Pack. Unit
PFC200 CS 2ETH RS CAN DPS	**750-8206**	1
PFC200 CS 2ETH RS CAN DPS/T	**750-8206/025-000**	1
Extended temperature range: -20 °C ... +60 °C		
PFC200 CS 2ETH RS CAN DPS TELE/T	**750-8206/025-001**	1
Extended temperature range: -20 °C ... +60 °C		

Accessories		Item No.	Pack. Unit
WAGO-I/O-PRO V2.3, RS-232 kit		**759-333**	1
SD memory card, 2 GB		**758-879/000-001**	1
Miniature WSB Quick marking system			
	plain	**248-501**	5
	with marking	see Section 11	

Approvals	
Conformity marking	CE
Korea Certification	(750-8206)
Marine applications (versions upon request)	GL
UL 508	
ANSI/ISA 12.12.01	Class I, Div. 2, Grp. ABCD, T4
TÜV 14 ATEX 148929 X	II 3 G Ex nA IIC T4 Gc (750-8206)
IECEx TUN 14.0035 X	Ex nA IIC T4 Gc (750-8206)

System Data	
CPU	Cortex A8, 600 MHz
Operating system	Real-time Linux (with RT-Preemption patch)
Main memory (RAM)	256 Mbytes
Internal memory (flash)	256 Mbytes
Retain memory	128 Kbytes
ETHERNET	2 x RJ-45 (switched)
Transmission medium	Twisted Pair S-UTP
	100 Ω, Cat 5;
	Max. line length: 100 m
Baud rate	10/100 Mbit/s; 10Base-T/100Base-TX
Interface (serial)	RS-232/-485 (switchable)
Fieldbus	PROFIBUS DP Slave, CAN, CANopen
Protocols	DHCP, DNS, NTP, FTP, FTPS, SNMP, HTTP,
	HTTPS, SSH, MODBUS (TCP, UDP, RTU)
750-8206/025-001	IEC 60870-5-101/-103/-104,
	IEC 61850-7-4, IEC 61400-25, DNP3
Programming	WAGO-I/O-PRO V2.3, ***e!****COCKPIT*
IEC 61131-3	IL, LD, FBD (CFC), ST, FC
SD card slot	Push-push mechanism, sealable cover lid
Type of memory card	SD and SDHC up to 32 GB (All
	guaranteed properties are only valid in
	connection with the WAGO 758-879/
	000-001 memory card.)

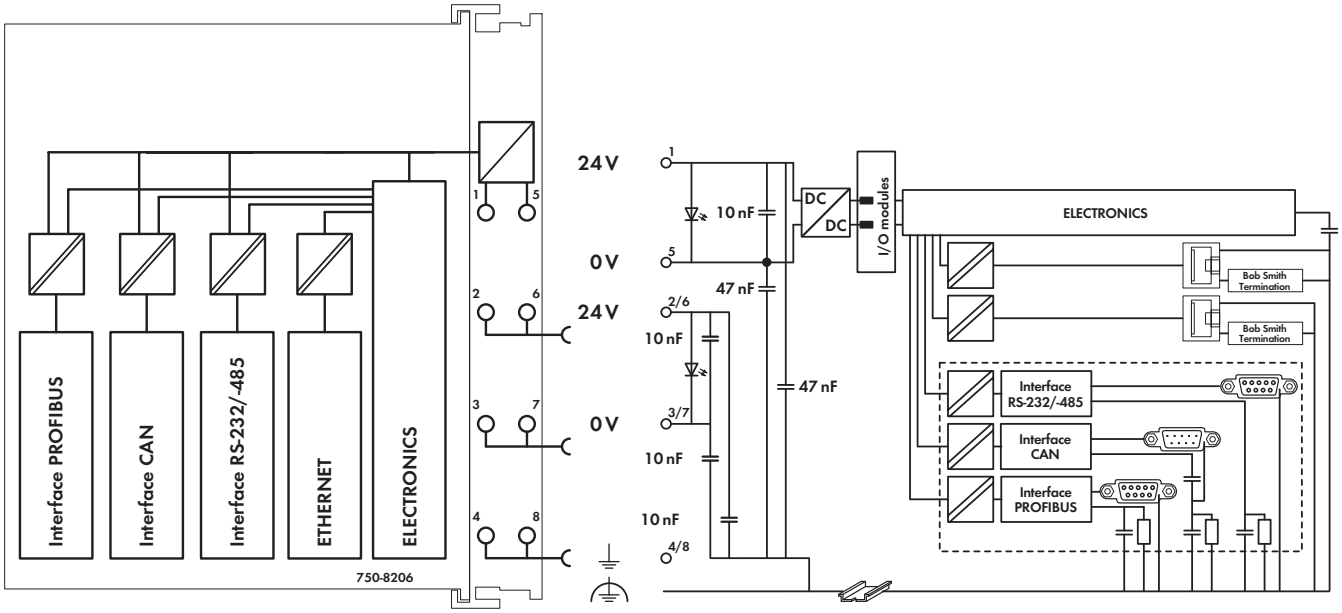

Technical Data

Number of I/O modules (per node)	64
with bus extension	250
Input and output process image (max.)	
Internal data bus	1000 words
MODBUS	1000 words
PROFIBUS	244 bytes in 80 slots
CAN	2000 words
I/O interfaces (serial)	1 x serial interface per TIA/EIA 232 and
	TIA/EIA 485 (switchable), 9-pole D-sub
	female connector
Diagnostic LEDs	Power supply;
	SYS; RUN;
	FIELDBUS (MS, NS, CAN, DIA, BF);
	USER (U1 ... U4);
	Internal data bus
User LEDs	via CODESYS library
Memory configuration CODESYS 2.3	
Program memory	16 MB
Data memory	64 MB
Non-volatile memory (retain)	128 KB
Memory configuration **e!**RUNTIME	
Program and data memory	60 MB (dynamically distributed)
Non-volatile memory (retain)	128 KB
Power supply	24 V DC (-25 % ... +30 %)
Max. input current (24 V)	550 mA
Total current for I/O modules (5 V)	1700 mA
Isolation	500 V system/supply

General Specifications

Dimensions (mm) W x H x L	112 x 65 x 100
	Height from upper-edge of DIN 35 rail
Weight	171.5 g
EMC immunity of interference	acc. to EN 61000-6-2, marine applications
EMC emission of interference	acc. to EN 61000-6-3, marine applications
Degree of protection	IP20 acc. to DIN 60529
Type of mounting	DIN 35 rail
Housing material	PC
Ambient conditions	
Operating temperature	0 °C ... +55 °C
Storage temperature	-25 °C ... +85 °C
Relative air humidity (no condensation)	95 %
Wire connection	CAGE CLAMP®
Cross sections	0.08 mm² ... 2.5 mm² / AWG 28 ... 14
Strip lengths	8 ... 9 mm / 0.33 in

PLC – PFC200 Controller

PFC200 CS 2ETH RS CAN

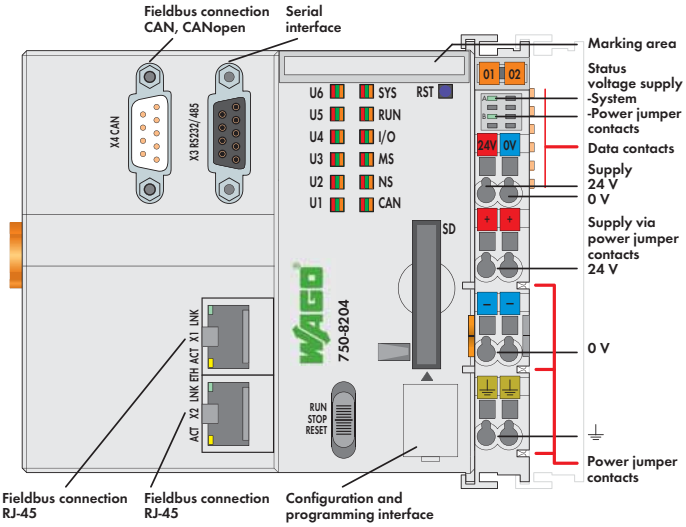

The PFC200 Controller is a compact PLC for the modular WAGO-I/O-SYSTEM. Besides network and fieldbus interfaces, the controller supports all digital, analog and specialty modules found within the 750/753 Series.
Two ETHERNET interfaces and integrated switch enable line topology wiring. An integrated Web server provides the user with configuration options and status information from the PFC200.
Besides the processing industry and building automation, typical markets for the PFC200 include the standard machine and plant industries (e.g., packaging, bottling, textiles, production and metal & wood processing).

Programmable to IEC 61131-3
- Programmable via WAGO-I/O-PRO V2.3
- Direct connection of WAGO I/O modules
- 2 x ETHERNET (configurable), RS-232/-485, CAN, CANopen
- Linux operating system with RT-Preemption patch
- Configuration via CODESYS, ***e!****COCKPIT* or Web-based management interface
- Maintenance-free

Description	Item No.	Pack. Unit
PFC200 CS 2ETH RS CAN	**750-8204**	1
PFC200 CS 2ETH RS CAN/T	**750-8204/025-000**	1
Extended temperature range: -20 °C ... +60 °C		

Accessories		Item No.	Pack. Unit
WAGO-I/O-PRO V2.3, RS-232 kit		**759-333**	1
SD memory card, 2 GB		**758-879/000-001**	1
Miniature WSB Quick marking system			
	plain	**248-501**	5
	with marking	see Section 11	

Approvals

Conformity marking	CE
Korea Certification	(750-8204)
Marine applications (versions upon request)	BV, GL
UL 508	
ANSI/ISA 12.12.01	Class I, Div. 2, Grp. ABCD, T4
TÜV 14 ATEX 148929 X	II 3 G Ex nA IIC T4 Gc (750-8204)
IECEx TUN 14.0035 X	Ex nA IIC T4 Gc (750-8204)

System Data

CPU	Cortex A8, 600 MHz
Operating system	Real-time Linux (with RT-Preemption patch)
Main memory (RAM)	256 Mbytes
Internal memory (flash)	256 Mbytes
Retain memory	128 Kbytes
ETHERNET	2 x RJ-45 (switched)
Transmission medium	Twisted Pair S-UTP
	100 Ω, Cat 5;
	Max. line length: 100 m
Baud rate	10/100 Mbit/s; 10Base-T/100Base-TX
Interface (serial)	RS-232/-485 (switchable)
Fieldbus	CAN, CANopen
Protocols	DHCP, DNS, NTP, FTP, FTPS, SNMP, HTTP,
	HTTPS, SSH, MODBUS (TCP, UDP, RTU)
Programming	WAGO-I/O-PRO V2.3, ***e!****COCKPIT*
IEC 61131-3	IL, LD, FBD (CFC), ST, FC
SD card slot	Push-push mechanism, sealable cover lid
Type of memory card	SD and SDHC up to 32 GB (All
	guaranteed properties are only valid in
	connection with the WAGO 758-879/
	000-001 memory card.)

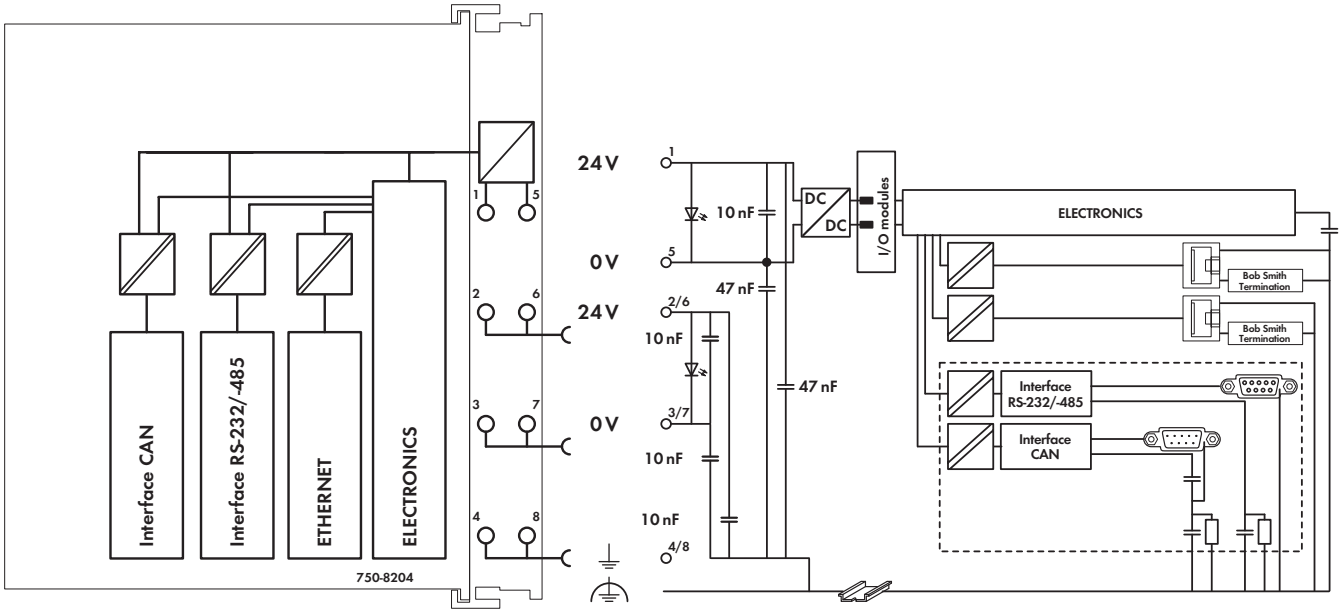

Technical Data

Number of I/O modules (per node)	64
with bus extension	250
Input and output process image (max.)	
Internal data bus	1000 words
MODBUS	1000 words
CAN	2000 words
I/O interfaces (serial)	1 x serial interface per TIA/EIA 232 and TIA/EIA 485 (switchable), 9-pole D-sub female connector
Diagnostic LEDs	Power supply; SYS; RUN; FIELDBUS (MS, NS, CAN); USER (U1 ... U6); Internal data bus
User LEDs	via CODESYS library
Memory configuration CODESYS 2.3	
Program memory	16 MB
Data memory	64 MB
Non-volatile memory (retain)	128 KB
Memory configuration **e!**RUNTIME	
Program and data memory	60 MB (dynamically distributed)
Non-volatile memory (retain)	128 KB
Power supply	24 V DC (-25 % ... +30 %)
Max. input current (24 V)	550 mA
Total current for I/O modules (5 V)	1700 mA
Isolation	500 V system/supply

General Specifications

Dimensions (mm) W x H x L	112 x 65 x 100
	Height from upper-edge of DIN 35 rail
Weight	246.6 g
EMC immunity of interference	acc. to EN 61000-6-2, marine applications
EMC emission of interference	acc. to EN 61000-6-3, marine applications
Degree of protection	IP20 acc. to DIN 60529
Type of mounting	DIN 35 rail
Housing material	PC
Ambient conditions	
Operating temperature	0 °C ... +55 °C
Storage temperature	-25 °C ... +85 °C
Relative air humidity (no condensation)	95 %
Wire connection	CAGE CLAMP®
Cross sections	0.08 mm² ... 2.5 mm² / AWG 28 ... 14
Strip lengths	8 ... 9 mm / 0.33 in

PLC – PFC200 Controller

PFC200 CS 2ETH CAN

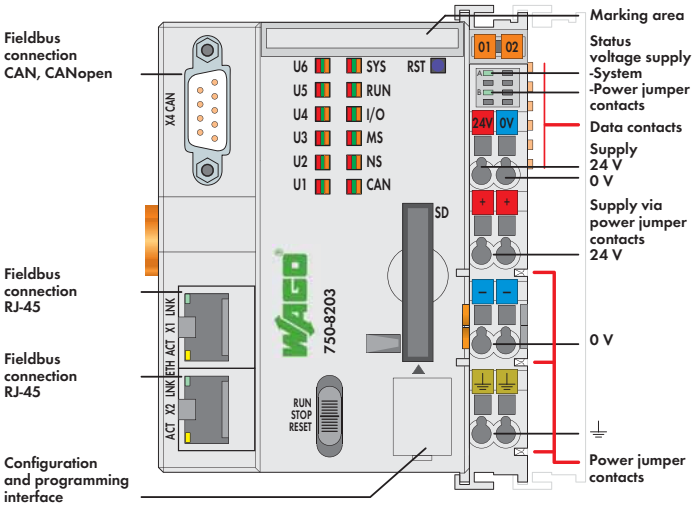

The PFC200 Controller is a compact PLC for the modular WAGO-I/O-SYSTEM. Besides network and fieldbus interfaces, the controller supports all digital, analog and specialty modules found within the 750/753 Series.
Two ETHERNET interfaces and integrated switch enable line topology wiring. An integrated Web server provides the user with configuration options and status information from the PFC200.
Besides the processing industry and building automation, typical markets for the PFC200 include the standard machine and plant industries (e.g., packaging, bottling, textiles, production and metal & wood processing).

Programmable to IEC 61131-3
- Programmable via WAGO-I/O-PRO V2.3
- Direct connection of WAGO I/O modules
- 2 x ETHERNET (configurable), CAN, CANopen
- Linux operating system with RT-Preemption patch
- Configuration via CODESYS, ***e!***COCK*PIT* or Web-based management interface
- Maintenance-free

Description	Item No.	Pack. Unit
PFC200 CS 2ETH CAN	**750-8203**	1
PFC200 CS 2ETH CAN/T	**750-8203/025-000**	1
Extended temperature range: -20 °C ... +60 °C		

Accessories		Item No.	Pack. Unit
WAGO-I/O-PRO V2.3, RS-232 kit		**759-333**	1
SD memory card, 2 GB		**758-879/000-001**	1
Miniature WSB Quick marking system			
	plain	**248-501**	5
	with marking	see Section 11	

Approvals

Conformity marking	CE
Korea Certification	(750-8203)
Marine applications (versions upon request)	GL
UL 508	
ANSI/ISA 12.12.01	Class I, Div. 2, Grp. ABCD, T4
TÜV 14 ATEX 148929 X	II 3 G Ex nA IIC T4 Gc (750-8203)
IECEx TUN 14.0035 X	Ex nA IIC T4 Gc (750-8203)

System Data

CPU	Cortex A8, 600 MHz
Operating system	Real-time Linux (with RT-Preemption patch)
Main memory (RAM)	256 Mbytes
Internal memory (flash)	256 Mbytes
Retain memory	128 Kbytes
ETHERNET	2 x RJ-45 (switched)
Transmission medium	Twisted Pair S-UTP
	100 Ω, Cat 5;
	Max. line length: 100 m
Baud rate	10/100 Mbit/s; 10Base-T/100Base-TX
Fieldbus	CAN, CANopen
Protocols	DHCP, DNS, NTP, FTP, FTPS, SNMP, HTTP,
	HTTPS, SSH, MODBUS (TCP, UDP)
Programming	WAGO-I/O-PRO V2.3, ***e!***COCK*PIT*
IEC 61131-3	IL, LD, FBD (CFC), ST, FC
SD card slot	Push-push mechanism, sealable cover lid
Type of memory card	SD and SDHC up to 32 GB (All
	guaranteed properties are only valid in
	connection with the WAGO 758-879/
	000-001 memory card.)

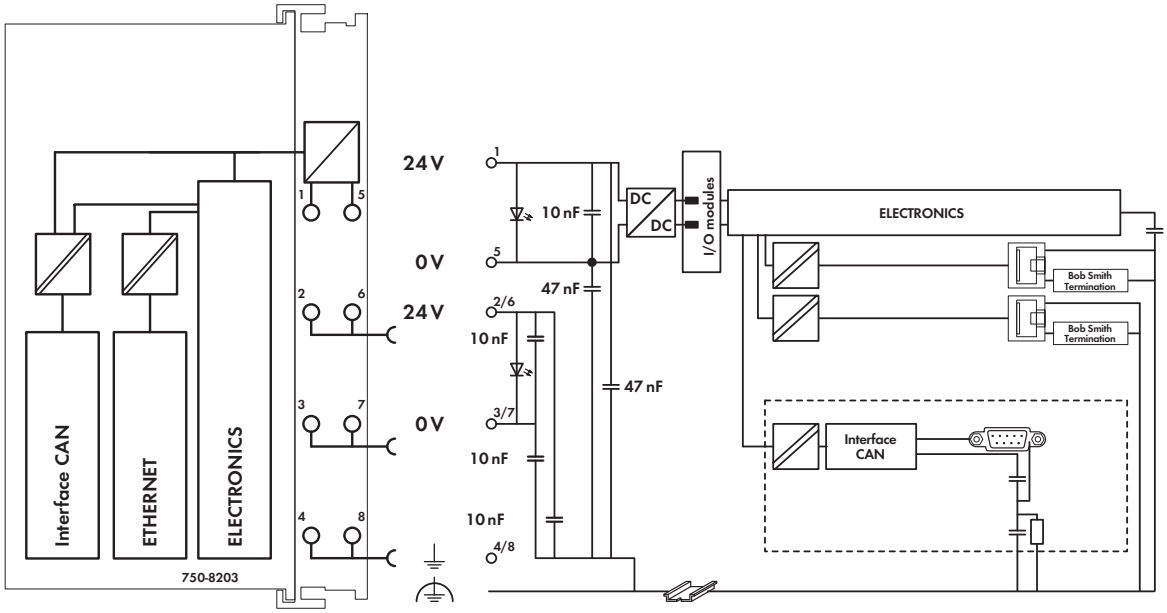

Technical Data

Number of I/O modules (per node)	64
with bus extension	250
Input and output process image (max.)	
Internal data bus	1000 words
MODBUS	1000 words
CAN	2000 words
Diagnostic LEDs	Power supply;
	SYS; RUN; FELDBUS (CAN, MS, NS);
	USER (U1 ... U6);
	Internal data bus
User LEDs	via CODESYS library
Memory configuration CODESYS 2.3	
Program memory	16 MB
Data memory	64 MB
Non-volatile memory (retain)	128 KB
Memory configuration **e!**RUNTIME	
Program and data memory	60 MB (dynamically distributed)
Non-volatile memory (retain)	128 KB
Power supply	24 V DC (-25 % ... +30 %)
Max. input current (24 V)	550 mA
Total current for I/O modules (5 V)	1700 mA
Isolation	500 V system/supply

General Specifications

Dimensions (mm) W x H x L	79 x 65 x 100
	Height from upper-edge of DIN 35 rail
Weight	208.5 g
EMC immunity of interference	acc. to EN 61000-6-2, marine applications
EMC emission of interference	acc. to EN 61000-6-3, marine applications
Degree of protection	IP20 acc. to DIN 60529
Type of mounting	DIN 35 rail
Housing material	PC
Ambient conditions	
Operating temperature	0 °C ... +55 °C
Storage temperature	-25 °C ... +85 °C
Relative air humidity (no condensation)	95 %
Wire connection	CAGE CLAMP®
Cross sections	0.08 mm² ... 2.5 mm² / AWG 28 ... 14
Strip lengths	8 ... 9 mm / 0.33 in

PLC – PFC200 Controller

PFC200 CS 2ETH RS

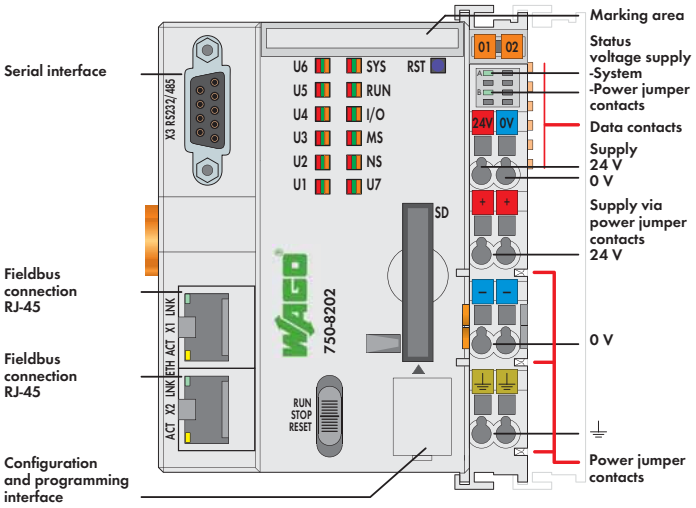

The PFC200 Controller is a compact PLC for the modular WAGO-I/O-SYSTEM. Besides network and fieldbus interfaces, the controller supports all digital, analog and specialty modules found within the 750/753 Series.
Two ETHERNET interfaces and integrated switch enable line topology wiring. An integrated Web server provides the user with configuration options and status information from the PFC200.
Besides the processing industry and building automation, typical markets for the PFC200 include the standard machine and plant industries (e.g., packaging, bottling, textiles, production and metal & wood processing).

Programmable to IEC 61131-3
- Programmable via WAGO-I/O-PRO V2.3
- Direct connection of WAGO I/O modules
- 2 x ETHERNET (configurable), RS-232/-485
- Linux operating system with RT-Preemption patch
- Configuration via CODESYS, ***e!****COCKPIT* or Web-based management interface
- Maintenance-free

Description	Item No.	Pack. Unit
PFC200 CS 2ETH RS	**750-8202**	1
PFC200 CS 2ETH RS/T	**750-8202/025-000**	1
Extended temperature range: -20 °C ... +60 °C		
PFC200 CS 2ETH RS Telecontrol/T	**750-8202/025-001**	1
Extended temperature range: -20 °C ... +60 °C		
PFC200 CS 2ETH RS Telecontrol ECO/T	**750-8202/025-002**	1
Extended temperature range: -20 °C ... +60 °C		

Accessories		Item No.	Pack. Unit
WAGO-I/O-PRO V2.3, RS-232 kit		**759-333**	1
SD memory card, 2 GB		**758-879/000-001**	1
Miniature WSB Quick marking system			
	plain	**248-501**	5
	with marking	see Section 11	

Approvals

Conformity marking	CE
Korea Certification	(750-8202)
Marine applications (versions upon request)	GL
UL 508	
ANSI/ISA 12.12.01	Class I, Div. 2, Grp. ABCD, T4
TÜV 14 ATEX 148929 X	II 3 G Ex nA IIC T4 Gc (750-8202)
IECEx TUN 14.0035 X	Ex nA IIC T4 Gc (750-8202)

System Data

CPU	Cortex A8, 600 MHz
Operating system	Real-time Linux (with RT-Preemption patch)
Main memory (RAM)	256 Mbytes
Internal memory (flash)	256 Mbytes
Retain memory	128 Kbytes
ETHERNET	2 x RJ-45 (switched)
Transmission medium	Twisted Pair S-UTP
	100 Ω, Cat 5;
	Max. line length: 100 m
Baud rate	10/100 Mbit/s; 10Base-T/100Base-TX
Interface (serial)	RS-232/-485 (switchable)
Protocols	DHCP, DNS, NTP, FTP, FTPS, SNMP, HTTP,
	HTTPS, SSH, MODBUS (TCP, UDP, RTU)
750-8202/025-001 and -002	IEC 60870-5-101/-103/-104,
	IEC 61850-7-4, IEC 61400-25, DNP3
Programming	WAGO-I/O-PRO V2.3, ***e!****COCKPIT*
IEC 61131-3	IL, LD, FBD (CFC), ST, FC
SD card slot	Push-push mechanism, sealable cover lid
Type of memory card	SD and SDHC up to 32 GB (All
	guaranteed properties are only valid in
	connection with the WAGO 758-879/
	000-001 memory card.)

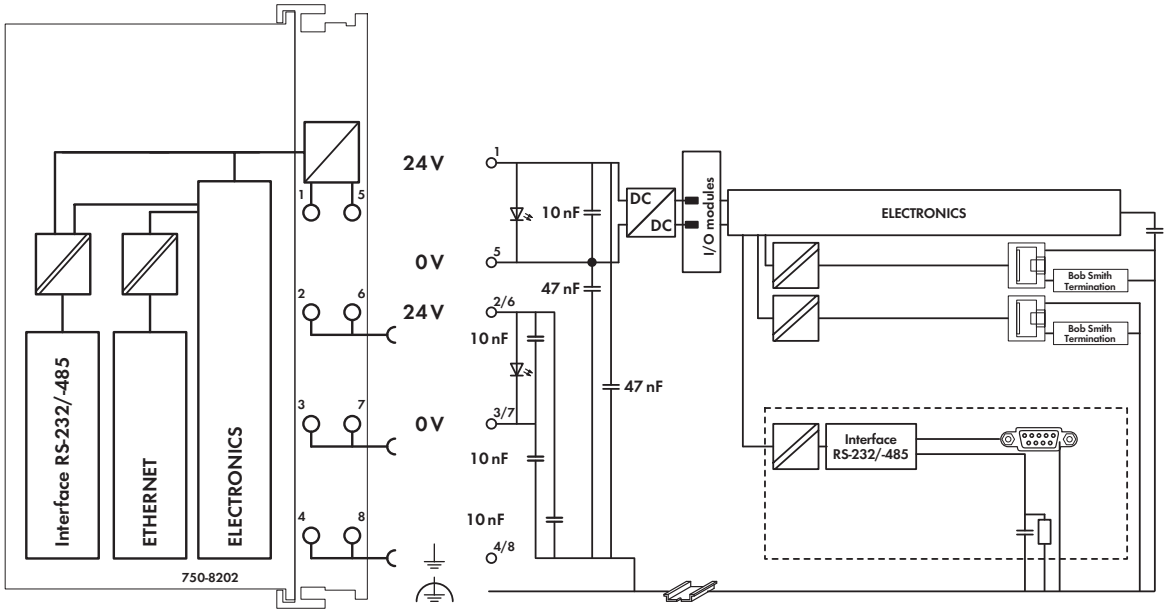

Technical Data

Number of I/O modules (per node)	64
with bus extension	250
750-8202/025-002	4
Input and output process image (max.)	
Internal data bus	1000 words
MODBUS	1000 words
I/O interfaces (serial)	1 x serial interface per TIA/EIA 232 and TIA/EIA 485 (switchable), 9-pole D-sub female connector
Diagnostic LEDs	Power supply; SYS; RUN; FIELDBUS (MS, NS); USER (U1 ... U7); Internal data bus
User LEDs	via CODESYS library
Memory configuration CODESYS 2.3	
Program memory	16 MB
Data memory	64 MB
Non-volatile memory (retain)	128 KB
Memory configuration **e!**RUNTIME	
Program and data memory	60 MB (dynamically distributed)
Non-volatile memory (retain)	128 KB
Power supply	24 V DC (-25 % ... +30 %)
Max. input current (24 V)	550 mA
Total current for I/O modules (5 V)	1700 mA
Isolation	500 V system/supply

General Specifications

Dimensions (mm) W x H x L	79 x 65 x 100
	Height from upper-edge of DIN 35 rail
Weight	209.7 g
EMC immunity of interference	acc. to EN 61000-6-2, marine applications
EMC emission of interference	acc. to EN 61000-6-3, marine applications
Degree of protection	IP20 acc. to DIN 60529
Type of mounting	DIN 35 rail
Housing material	PC
Ambient conditions	
Operating temperature	0 °C ... +55 °C
Storage temperature	-25 °C ... +85 °C
Relative air humidity (no condensation)	95 %
Wire connection	CAGE CLAMP®
Cross sections	0.08 mm² ... 2.5 mm² / AWG 28 ... 14
Strip lengths	8 ... 9 mm / 0.33 in

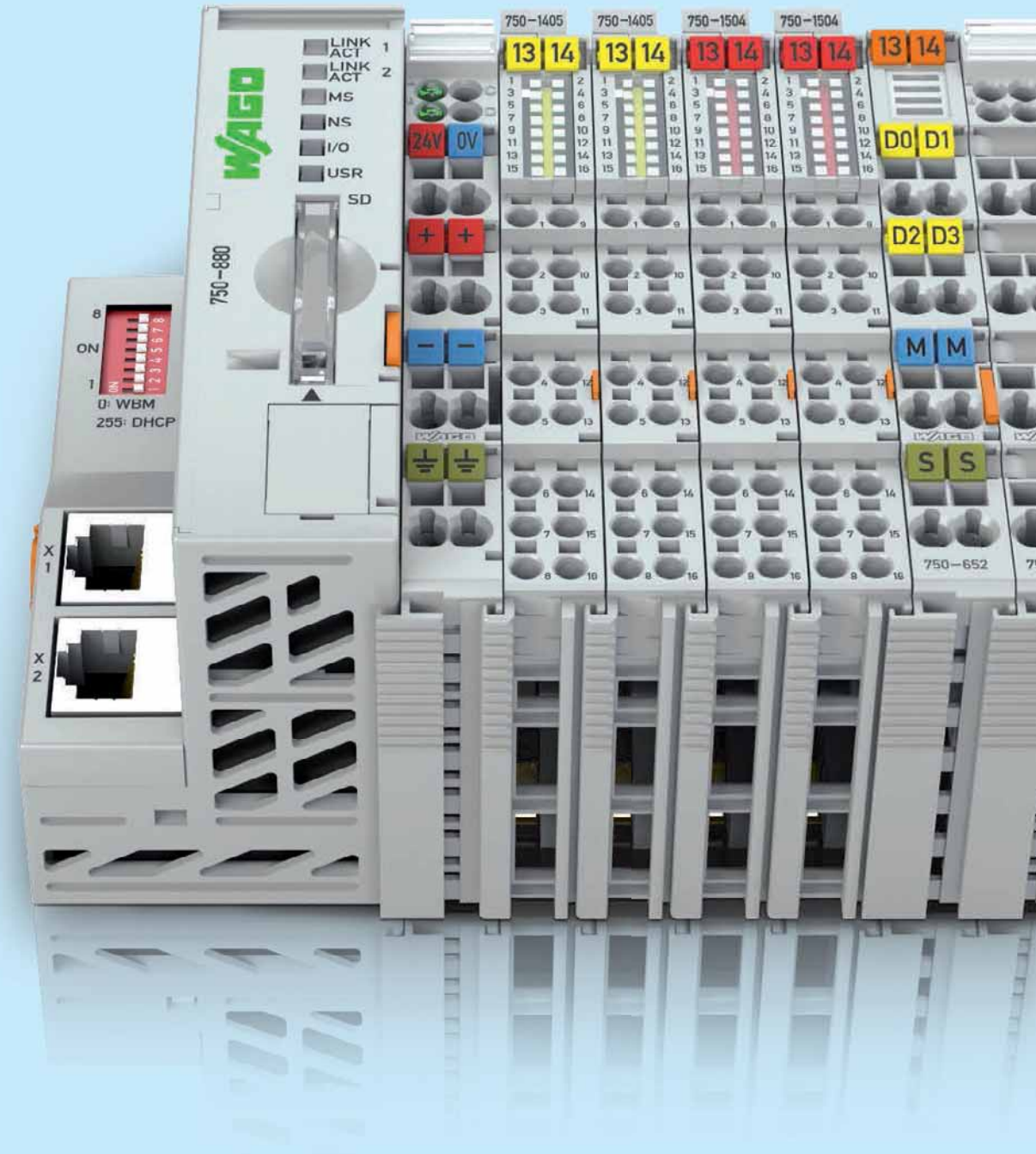

Programmable Fieldbus Controllers

◀◀ Section 2

PERSPECTO® Control Panels

- Merging control and visualization
- 8.9 cm ... 38.1 cm (3.5″ ... 15″)

◀ Section 3.1

PFC200

- Maximum performance in a minimum space
- High processing speed
- Additional operating controls (e.g., start/stop switch)
- Based on Linux® also in high-level language

Programmable Fieldbus Controllers

- Decentralized intelligence based on fieldbus couplers
- Programmable to IEC 61131-3
- WAGO-I/O-SYSTEM 750, modular

Section 3.3 ▶

Programmable Fieldbus Controller XTR

For demanding applications where the following are critical:

- Extreme temperature stability
- Immunity to interference and impulse-voltage withstand
- Vibration and shock resistance

Controllers
Programmable Fieldbus Controllers

	Page
General Product Information	62
Versions	63
Interfaces and Configurations	63
Installation Instructions	64
Item Number Keys	65
Standards and Rated Conditions	65

	CPU	ETHERNET				MODBUS RTU	Telecontrol protocols: IEC 60870, IEC 61850/61400, DNP3	BACnet MS/TP	DeviceNet	PROFIBUS	CANopen	INTERBUS	Description	Item No. Standard	Item No. /T Extended operating temperature range: -20 °C ... +60 °C	
		MODBUS TCP	EtherNet/IP	BACnet/IP	KNX IP											
	32-bit	x	x				x x						ETHERNET Controller	750-880	750-880/025-000 750-880/025-001 750-880/025-002	66
	32-bit	x	x										ETHERNET Controller	750-881		68
	32-bit	x	x										ETHERNET Controller, Media redundancy	750-885 750-882	750-885/025-000	70 72
	32-bit	x	x			x	x						Telecontrol Controller	750-872		74
	32-bit	x	x			x							ETHERNET TCP/IP Controller, RS-232	750-873		76
	32-bit	x	x										ETHERNET Controller	750-852		78
	32-bit	x			x								KNX IP Controller	750-889		80
	32-bit	x		x									BACnet/IP Controller	750-831		82
		x		x									BACnet/IP Controller	750-830		84
	32-bit	x						x					BACnet MS/TP Controller	750-829		86
	16-bit	x											ETHERNET TCP/IP Controller	750-843 750-842		88 90
	16-bit								x				DeviceNet Controller	750-806		92
	16-bit					x							MODBUS Controller	750-815/300-000 750-816/300-000	750-815/325-000	94 96
	16-bit									Slave			PROFIBUS Controller	750-833	750-833/025-000	98
	16-bit										Master/ Slave		CANopen Controller	750-837 750-837/02x-000 750-838 750-838/02x-000		100 102
												x	INTERBUS Controller	750-804		104

Programmable Fieldbus Controllers
General Product Information

Programmable Fieldbus Controllers: Open — Flexible — Compact

WAGO controllers are suitable for various tasks in industry, process and building automation, e.g., measurement and production data acquisition. Based on the fieldbus couplers for all standard fieldbus systems, they are programmable to IEC 61131-3. Direct connection to a wide range of I/O modules from the WAGO-I/O-SYSTEM 750 optimizes adaptation to the application.

Building Automation
Thanks to specific characteristics, the controllers for the BACnet/IP and KNX IP bus systems are optimized for building automation. The diverse portfolio of stackable I/O modules allows the integration of external systems such as lighting control (DALI), sun protection (SMI), wireless switches (EnOcean) and much more.

Marine Systems and Onshore/Offshore Industry
International approvals coupled with industry-specific features permit use in shipbuilding and other harsh sectors. Meeting stringent criteria permits operation on marine diesels and in the EMC-sensitive area of a vessel's bridge. Because WAGO meets the marine industry's significantly greater requirements for immunity to interference or emission of interference and mechanical performance, WAGO I/O is well-suited to other industries.

Telecontrol technology
Standardized telecontrol protocols according to IEC 60870-5, IEC 61850 or IEC 61400-25 ensure the use of the programmable fieldbus controllers in telecontrol technology.

Link between Process Data and IT Application
The controllers ideally combine real-time requirements with IT functionality. They support both MODBUS/TCP and ETHERNET/IP for use in industrial environments. HTTP, SNTP, SNMP, FTP, BootP, DHCP, DNS and other protocols simplify integration into IT environments. Integrated Web pages and Web-based visualization provide IT applications with real-time process data. Furthermore, the PLC incorporates library functions for email, SOAP, ASP, IP configuration, ETHERNET sockets and file system.

Worldwide Approvals
International approvals for building and industrial automation, as well as the process and shipbuilding sectors guarantee worldwide use even under harsh operating conditions, e.g., ATEX, BR-Ex, IECEx, UL 508, UL ANSI/ISA and shipbuilding.

Modular Expandability
With the WAGO-I/O-SYSTEM 750, the programmable fieldbus controllers can be expanded to almost any input/output interface. The modular, DIN-rail mount design allows for easy installation, expansion and modification of the I/O node. The streamlined design prevents installation errors. In addition, proven CAGE CLAMP® technology offers fast, vibration-proof and maintenance-free connections that are independent of operator skill. Depending on the I/O module's granularity, the field peripherals can be directly wired using 1-, 2-, 3- or 4-wire technology.

Maximum Reliability and Ruggedness
The WAGO-I/O-SYSTEM is engineered and tested for use in the most demanding environmental conditions (e.g., temperature cycling, shock/vibration loading and ESD) according to the highest standards. Spring Pressure Connection Technology guarantees reliable operation. Integrated QA measures in the production process and 100 % function testing ensure consistent quality.

- Controllers for all standard fieldbus systems
- Include industry-specific features
- Programmable via CODESYS per IEC 61131-3
- Expandable with the WAGO-I/O-SYSTEM 750's broad portfolio
- Extensive IT integration possibilities
- Flexible platform adapts to diverse applications and environments
- Tested and approved worldwide
- Maintenance-free

Programmable Fieldbus Controllers
Versions

Extended Temperature Range

Industrial automation technology is typically operated in temperatures ranging from 0 °C to 55 °C. However, there are applications that require an extended temperature range. Select fieldbus controllers are available in an extended temperature range of -20 °C to +60 °C.

For extreme cases – when even the extended temperature range is not sufficient – the WAGO-I/O-SYSTEM 750 XTR is available.

Interfaces and Configurations

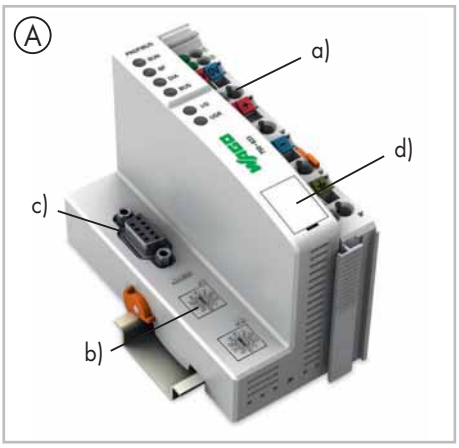

- Technical differences on the connection level. Optional address switch (b) and fieldbus interface (c)
- Service port (d)

Housing design (A)
- Includes supply module (a)
- W x H* x L (mm) 51 x 65 x 100

Housing design ECO (B)
- W x H* x L (mm) 50 x 65 x 97

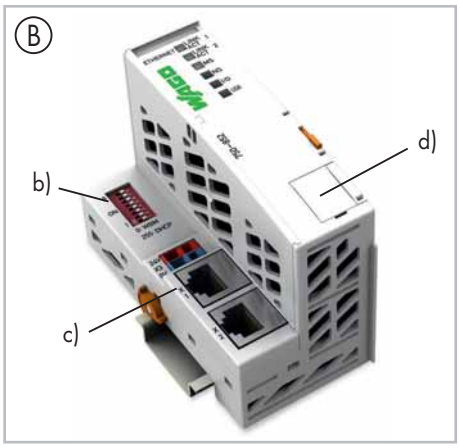

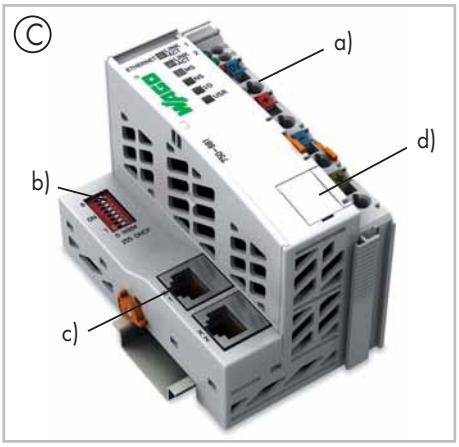

Housing design (C)
- Includes supply module (a)
- W x H* x L (mm) 62 x 65 x 100

Housing design (D)
- Includes supply module (a)
- SD card slot for external storage media (e)
- W x H* x L (mm) 62 x 65 x 100

*Height from upper edge of the DIN-rail

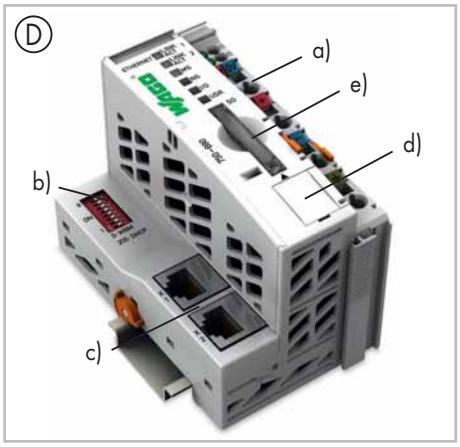

Programmable Fieldbus Controllers
Installation Instructions

Power Supply

Power is always channeled to the internal electronics power supply by the fieldbus coupler. The power supply to the field-side supply is electrically isolated via the supply module on the fieldbus coupler or a separate potential supply module. The division enables a separate supply for sensors and actuators. Snapping the I/O modules together automatically routes the supply voltages (system power supply 5 VDC via the data contacts and field supply via the optional power jumper contacts). Supply modules with diagnostics enable additional power supply monitoring. This ensures a flexible, user-specific supply design for a station.

The current supply to the electronics is limited by a maximum value. This value is dependent on the coupler used. If the sum of the internal current demand of all the I/O modules should exceed this value, an additional bus supply module is necessary. Even in this case, power supply to the field-side supply of 10 A may not be exceeded. However, different power supply modules allow a new power supply, formation of potential groups and the implementation of emergency stops.

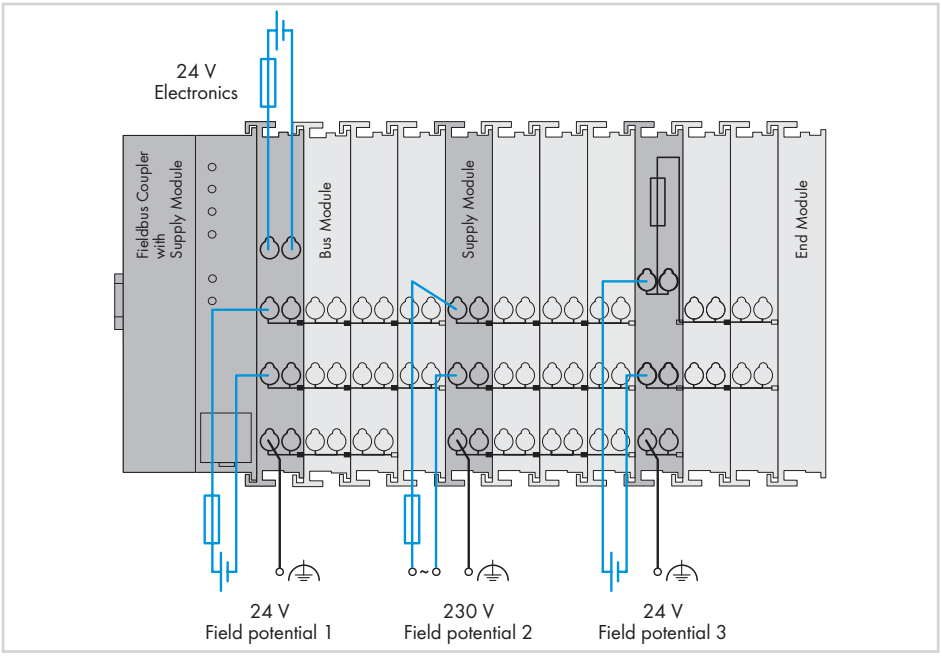

Notes

Additional steps must be implemented based on where the I/O-System is installed:

- Specific power and field-side power supply filters (750-624/626) are required for **marine** and onshore/offshore applications.
- A specific supply module (750-625) is required to operate **intrinsically safe Ex i modules**. Additionally, both a supply module and a field-side power supply filter are recommended when operating **intrinsically safe Ex i modules for marine** and onshore/offshore applications.
- As part of operating **safety-related I/O modules,** PELV/SELV power supply units must be used for 24 VDC supply of electronics and field. In addition, specific power and field-side power supply filters must be provided (750-626).

Please refer to the manual for details about the power supply's design.

Interference-Free in Safety-Related Applications

To safely and easily perform cost-effective, centralized deactivation of complete actuator groups, the actuator's power supply can be switched off using a safety switching device. This can either be performed for each individual actuator or by turning off the power supply to a group of control outputs.

In the event of failure, ensure that no interference from other current or power circuits occurs – even when the control voltage is switched off – so the defined safety function properties (logic and time response) remain unchanged.

Some modules are designed to provide interference-free safety functionality. These modules comply with safety requirements up to Category 4 of DIN EN ISO 13849-1:2007. The safety category and performance level depend solely on the safety components and their wiring.

Notice:

Interference-free WAGO I/O modules have no active influence on the safety function, they are not an active part of the safety application and are not a substitute for the safety switching device! When using the components in safety functions, the corresponding notes must be observed in the relevant manual.

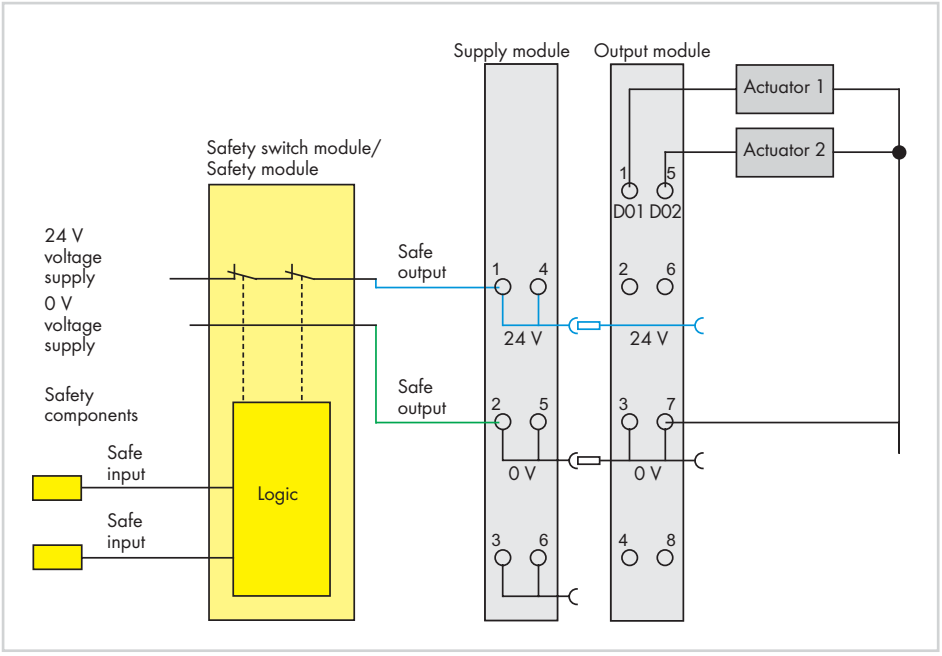

Example: Two-channel, double-pole power supply disconnection

Programmable Fieldbus Controllers
Item Number Keys

Explanation of the components for the item number key

Item No. : 750-8xx

0x, 1x:	16-bit CPU	INTERBUS, DeviceNet, MODBUS
2x, 3x:		BACnet, PROFIBUS, CANopen
4x:		ETHERNET
5x:	32-bit	ETHERNET ECO
7x, 8x:	32-bit Multitasking	ETHERNET, Telecontrol Protocols
		ETHERNET, Media Redundancy
		KNX IP

.../025-000: Extended temperature range of -20 °C ... +60 °C

Standards and Rated Conditions

General Specifications	
Operating voltage	24 VDC (-25 % ... +30 %)*; *for all shipbuilding-certified couplers
Operating temperature	0 °C ... +55 °C
Operating temperature for versions with an extended temperature range	-20 °C ... +60 °C
Storage temperature	-25 °C ... +85 °C
Storage temperature for versions with extended temperature range	-40 °C ... +85 °C
Relative humidity (without condensation)	95 %
Operating altitude	without temperature derating: 0 m ... 2000 m; with temperature derating: 2000 m ... 5000 m (0.5 K/100 m); max.: 5000 m
Degree of contamination	2 acc. to IEC 61131-2
Vibration resistance	0.5g (4g for all shipbuilding certified controllers) acc. to IEC 60068-2-6
Shock resistance	15g acc. to IEC 60068-2-27
EMC immunity to interference	acc. to EN 61000-6-2 / marine applications
EMC emission of interference	acc. to EN 61000-6-3 / EN 61000-6-4 / marine applications
Protection type	IP20
Mounting position	any
Type of mounting	DIN-rail
Housing material	Polycarbonate, polyamide 6.6
Stress due to contaminants	acc. to IEC 60068-2-42 and IEC 60068-2-43
Maximum pollutant concentration with a relative humidity < 75 %	SO2 ≤ 25 ppm; H2S ≤ 10 ppm
Connection technology	CAGE CLAMP®
Conductor cross-section; stripped lengths for standard controllers: ECO controllers:	 0.08 mm² ... 2.5 mm²/28 ... 14 AWG; 8 ... 9 mm/0.33 in. 0.08 mm² ... 1.5 mm²/28 ... 16 AWG; 5 ... 6 mm/0.22 in.
Current via power jumper contacts	max. 10 A

PLC - ETHERNET Programmable Fieldbus Controller

32-bit CPU, multitasking

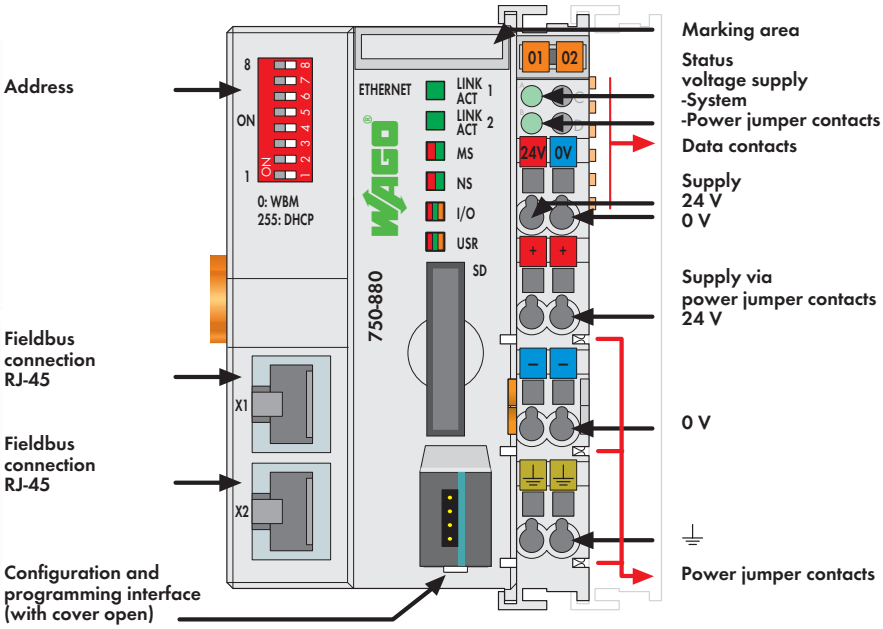

In conjunction with the WAGO-I/O-SYSTEM, the ETHERNET PLC can be used as a programmable controller within ETHERNET networks.
The PLC supports all digital, analog, and specialty modules within the 750/753 Series, and is suitable for data rates of 10/100 Mbit/s.
Two ETHERNET interfaces and an integrated switch allow the fieldbus to be wired in a line topology. This eliminates additional network devices, such as switches or hubs. Both interfaces support Auto-Negotiation and Auto-MDI(X).
The DIP switch configures the last byte of the IP address and may be used for IP address assignment.
The PLC supports both MODBUS/TCP and ETHERNET/IP for use in industrial environments. It also supports a wide variety of standard ETHERNET protocols for easy integration into IT environments (e.g., HTTP, BootP, DHCP, DNS, SNTP, SNMP, FTP).
For use in telecontrol applications; the 750-880/025-001 and -002 Controllers support the IEC 60870-5-101/-103-104, IEC 61850-7, and IEC 61400-25 communication protocols.
An integrated Web server provides the user with configuration options and status information from the controller.
The controller is programmable according to IEC 61131-3, capable of multitasking, and features a battery-backed RTC.
1 MB data memory is available.
The 750-880 PLC has a slot for a removable memory card, allowing device parameters or files (e.g., boot files) to be transferred from one controller to another. The memory card can be accessed via FTP and be used as an additional drive.

Description	Item No.	Pack. Unit
ETHERNET Controller	**750-880**	1
ETHERNET Controller/T	**750-880/025-000**	1
Extended temperature range: -20 °C ... +60 °C		
ETHERNET Controller Telecontrol/T	**750-880/025-001**	1
Extended temperature range: -20 °C ... +60 °C		
ETHERNET-Controller Telecontrol ECO/T	**750-880/025-002**	1
Extended temperature range: -20 °C ... +60 °C		

Accessories	Item No.	Pack. Unit
SD memory card, 2 GB	**758-879/000-001**	1
WAGO-I/O-PRO V2.3, RS-232 kit	**759-333**	1
Miniature WSB Quick marking system		
plain	**248-501**	5
with marking	see Section 11	

Approvals

Conformity marking	CE
Korea Certification	(750-880, 750-880/025-000, 750-880/025-001)
Marine applications (versions upon request)	ABS, BV, DNV, GL, KR, LR, NKK, PRS, RINA
UL 508	
ANSI/ISA 12.12.01	Class I, Div. 2, Grp. ABCD, T4
TÜV 07 ATEX 554086 X	I M2 Ex d I Mb, II 3 G Ex nA IIC T4 Gc, II 3 D Ex tc IIIC T135°C Dc
IECEx TUN 09.0001 X	Ex d I Mb, Ex nA IIC T4 Gc, Ex tc IIIC T135°C Dc

System Data

No. of controllers connected to Master	limited by ETHERNET specification
Transmission medium	Twisted Pair S-UTP
	100 Ω, Cat 5;
	Max. line length: 100 m
Baud rate	10/100 Mbit/s
Transmission performance	Class D acc. to EN 50173
Buscoupler connection	2 x RJ-45
Protocols	EtherNet/IP, MODBUS/TCP (UDP), HTTP,
	BootP, DHCP, DNS, SNTP, FTP, SNMP
750-880/025-001 and -002	IEC 60870-5-101/-103/-104,
	IEC 61850-7, IEC 61400-25, DNP3
Programming	WAGO-I/O-PRO V2.3
IEC 61131-3	IL, LD, FBD (CFC), ST, FC
SD card slot	Push-push mechanism, sealable cover lid
Type of memory card	SD and SDHC up to 32 GB (All
	guaranteed properties are only valid in
	connection with the WAGO 758-879/
	000-001 memory card.)

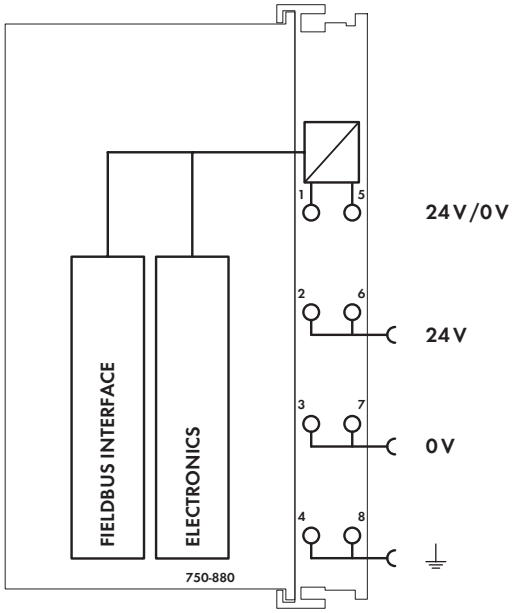

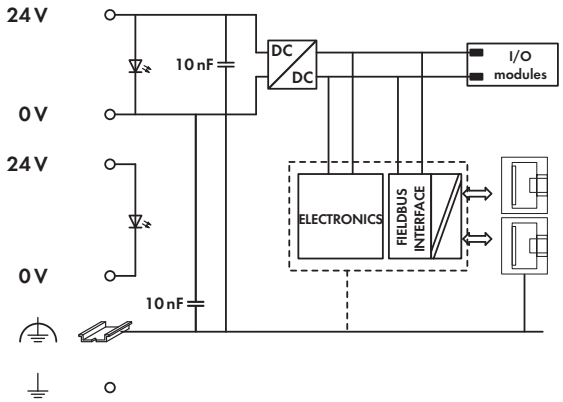

Technical Data

Number of I/O modules	64
with bus extension	250
750-880/025-002	4
Max. input process image	1020 words
Max. output process image	1020 words
Configuration	via PC
Program memory	1024 Kbytes
Data memory	1024 Kbytes
Non-volatile memory (retain)	32 Kbytes
Power supply	24 V DC (-25 % ... +30 %)
Input current typ. at rated load (24 V)	500 mA
Efficiency of the power supply (typ.) at	
nominal load (24 V)	90 %
Internal current consumption (5 V)	450 mA
Total current for I/O modules (5 V)	1700 mA
Isolation	500V system/supply

General Specifications

Operating temperature	0 °C ... +55 °C
Wire connection	CAGE CLAMP®
Cross sections	0.08 mm² ... 2.5 mm² / AWG 28 ... 14
Strip lengths	8 ... 9 mm / 0.33 in
Dimensions (mm) W x H x L	62 x 65 x 100
	Height from upper-edge of DIN 35 rail
Weight	161.8 g
Storage temperature	-25 °C ... +85 °C
Relative air humidity (no condensation)	95 %
Vibration resistance	acc. to IEC 60068-2-6
Shock resistance	acc. to IEC 60068-2-27
Degree of protection	IP20
EMC immunity of interference	acc. to EN 61000-6-2, marine applications
EMC emission of interference	acc. to EN 61000-6-3, marine applications

PLC - ETHERNET Programmable Fieldbus Controller

32-bit CPU, multitasking

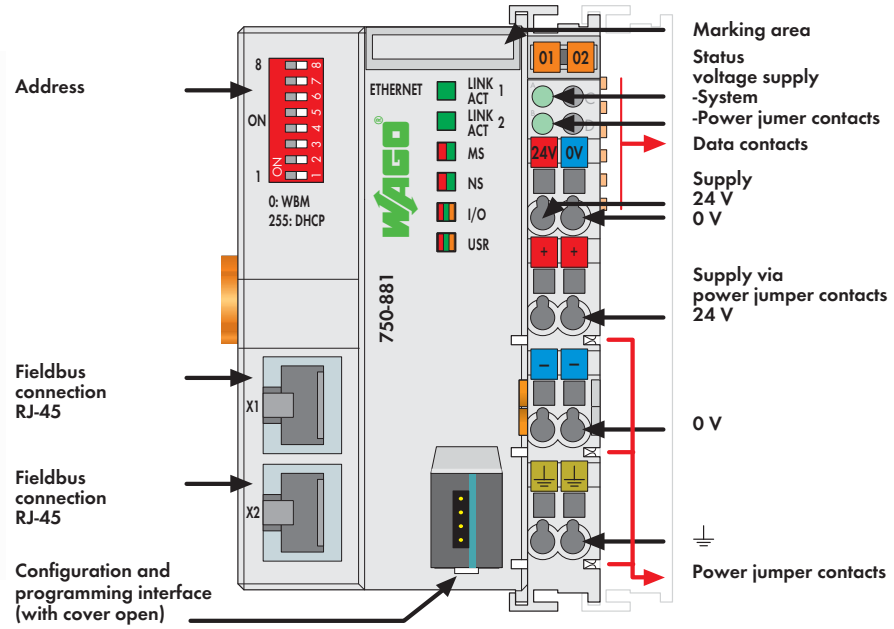

The 750-881 ETHERNET PLC connects ETHERNET to the modular WAGO-I/O-SYSTEM.

The PLC automatically configures, creating a local process image which may include analog, digital or specialty modules. Analog and specialty module data is sent via words and/or bytes; digital data is sent bit by bit.

Two ETHERNET interfaces and an integrated switch allow the fieldbus to be wired in a line topology. This eliminates additional network devices, such as switches or hubs. Both interfaces support Auto-Negotiation and Auto-MDI(X).

The DIP switch configures the last byte of the IP address and may be used for IP address assignment.

The PLC is designed for fieldbus communication in both EtherNet/IP and MODBUS networks. It also supports a wide variety of standard ETHERNET protocols (e.g., HTTP, BootP, DHCP, DNS, SNTP, SNMP, FTP). An integrated Web server provides the user with configuration options and status information from the controller. The IEC 61131-3 programmable controller is multitasking-capable and features a battery-backed RTC.

Description	Item No.	Pack. Unit
ETHERNET Controller	**750-881**	1

Accessories	Item No.	Pack. Unit
WAGO-I/O-PRO V2.3, RS-232 kit	**759-333**	1
Miniature WSB Quick marking system		
plain	**248-501**	5
with marking	see Section 11	

Approvals

Conformity marking	CE
Korea Certification	
Marine applications	ABS, BV, DNV, GL, KR, LR, NKK, PRS, RINA
UL 508	
ANSI/ISA 12.12.01	Class I, Div. 2, Grp. ABCD, T4
TÜV 07 ATEX 554086 X	I M2 Ex d I Mb, II 3 G Ex nA IIC T4 Gc, II 3 D Ex tc IIIC T135°C Dc
IECEx TUN 09.0001 X	Ex d I Mb, Ex nA IIC T4 Gc, Ex tc IIIC T135°C Dc

System Data

No. of controllers connected to Master	limited by ETHERNET specification
Transmission medium	Twisted Pair S-UTP
	100 Ω, Cat 5;
	Max. line length: 100 m
Baud rate	10/100 Mbit/s
Transmission performance	Class D acc. to EN 50173
Buscoupler connection	2 x RJ-45
Protocols	EtherNet/IP, MODBUS/TCP (UDP), HTTP,
	BootP, DHCP, DNS, SNTP, FTP, SNMP
Programming	WAGO-I/O-PRO V2.3
IEC 61131-3	IL, LD, FBD (CFC), ST, FC

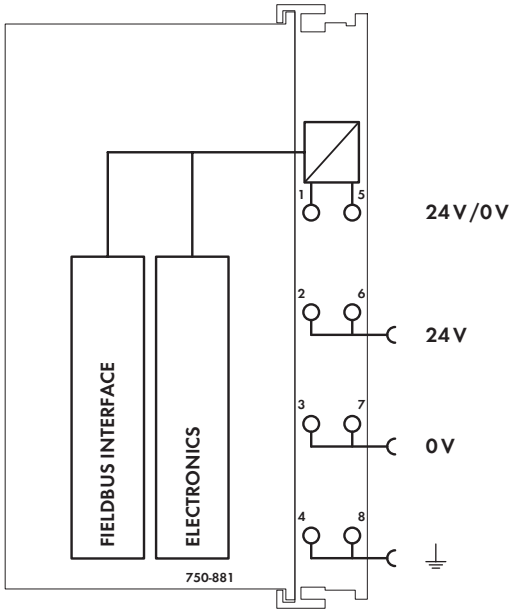

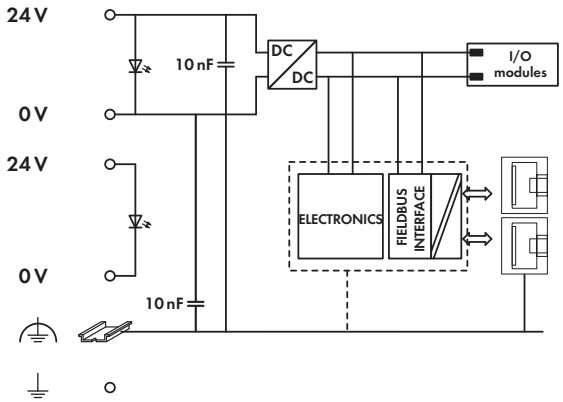

Technical Data

Number of I/O modules	64
with bus extension	250
Max. input process image	1020 words
Max. output process image	1020 words
Configuration	via PC
Program memory	1024 Kbytes
Data memory	512 Kbytes
Non-volatile memory (retain)	32 Kbytes
Power supply	24 V DC (-25 % ... +30 %)
Input current typ. at rated load (24 V)	500 mA
Efficiency of the power supply (typ.) at nominal load (24 V)	90 %
Internal current consumption (5 V)	450 mA
Total current for I/O modules (5 V)	1700 mA
Isolation	500V system/supply

General Specifications

Operating temperature	0 °C ... +55 °C
Wire connection	CAGE CLAMP®
Cross sections	0.08 mm² ... 2.5 mm² / AWG 28 ... 14
Strip lengths	8 ... 9 mm / 0.33 in
Dimensions (mm) W x H x L	62 x 65 x 100
	Height from upper-edge of DIN 35 rail
Weight	161 g
Storage temperature	-25 °C ... +85 °C
Relative air humidity (no condensation)	95 %
Vibration resistance	acc. to IEC 60068-2-6
Shock resistance	acc. to IEC 60068-2-27
Degree of protection	IP20
EMC immunity of interference	acc. to EN 61000-6-2, marine applications
EMC emission of interference	acc. to EN 61000-6-3, marine applications

PLC - ETHERNET Programmable Media Redundancy Fieldbus Controller

32-bit CPU, multitasking, with memory card slot

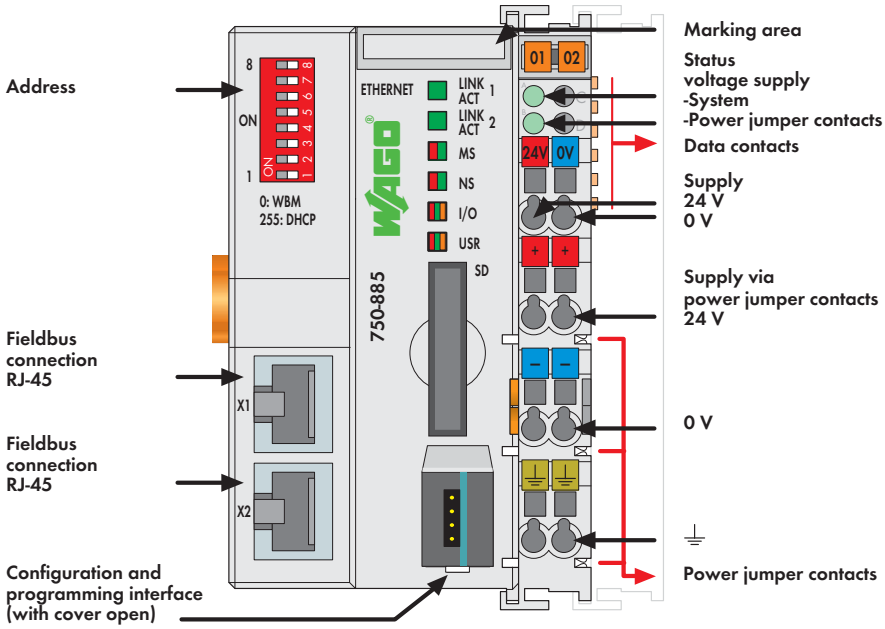

In conjunction with the WAGO-I/O-SYSTEM, the 750-885 ETHERNET PLC serves ETHERNET networks requiring fast and safe media redundancy. The PLC supports all digital, analog and specialty modules found within the 750/753 Series, and is suitable for data rates of 10/100 Mbit/s.
Media redundancy is achieved by operating the controller in two separate networks – which is accessible via two different IP addresses (including two MAC IDs). Cross communication between separate channels is not possible. The two separate ETHERNET interfaces allow redundant connection of two transmission paths (no hub or switch required). Both interfaces support Auto-Negotiation and Auto-MDI(X). The DIP switch configures the last byte of both default IP addresses and may be used for IP address assignment (DHCP, BootP).

The media redundancy PLC is designed for fieldbus communication via MODBUS/TCP in ETHERNET networks. It also supports a wide variety of standard ETHERNET protocols (e.g., HTTP, BootP, DHCP, DNS, FTP).
An integrated Web server provides configuration options to the user, while displaying PLC status information.
The IEC 61131-3 programmable controller is multitasking-capable and features a battery-backed RTC.
A data memory of 1 Mbyte is available.
For memory expansion, the 750-885 PLC is equipped with a removable memory card slot.

Description	Item No.	Pack. Unit
ETHERNET MR/SD Fieldbus Controller	**750-885**	1
ETHERNET MR/SD Fieldbus Controller/T	**750-885/025-000**	1
Extended temperature range: -20 °C ... +60 °C		

Accessories	Item No.	Pack. Unit
SD memory card, 2 GB	**758-879/000-001**	1
WAGO-I/O-PRO V2.3, RS-232 kit	**759-333**	1
Miniature WSB Quick marking system		
plain	**248-501**	5

Approvals

Conformity marking	CE
Marine applications (versions upon request)	GL
UL 508	
ANSI/ISA 12.12.01	Class I, Div. 2, Grp. ABCD, T4
TÜV 07 ATEX 554086 X	I M2 Ex d I Mb, II 3 G Ex nA IIC T4 Gc, II 3 D Ex tc IIIC T135°C Dc
IECEx TUN 09.0001 X	Ex d I Mb, Ex nA IIC T4 Gc, Ex tc IIIC T135°C Dc

System Data

No. of controllers connected to Master	limited by ETHERNET specification
Transmission medium	Twisted Pair S-UTP
	100 Ω, Cat 5;
	Max. line length: 100 m
Baud rate	10/100 Mbit/s
Transmission performance	Class D acc. to EN 50173
Buscoupler connection	2 x RJ-45
Protocols	EtherNet/IP, MODBUS/TCP (UDP), HTTP,
	BootP, DHCP, DNS, SNTP, FTP, SNMP
Programming	WAGO-I/O-PRO V2.3
IEC 61131-3	IL, LD, FBD (CFC), ST, FC
Redundancy function	via two logically separated ETHERNET
	interfaces
SD card slot	Push-push mechanism, sealable cover lid
Type of memory card	SD and SDHC up to 32 Gbytes (All
	guaranteed properties are only valid in
	combination with the WAGO 758-879/
	000-001 memory card.)

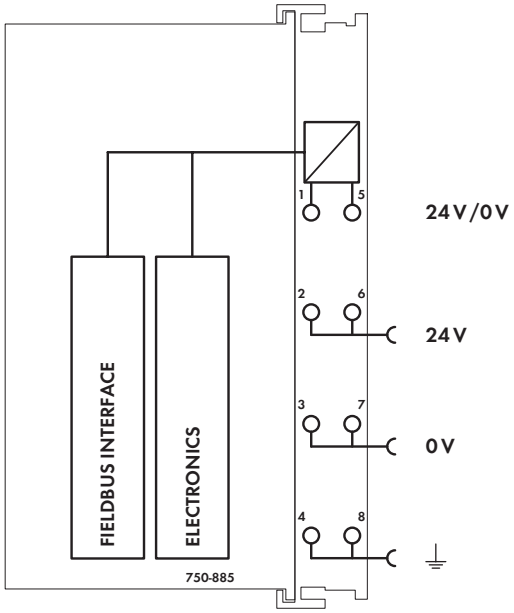

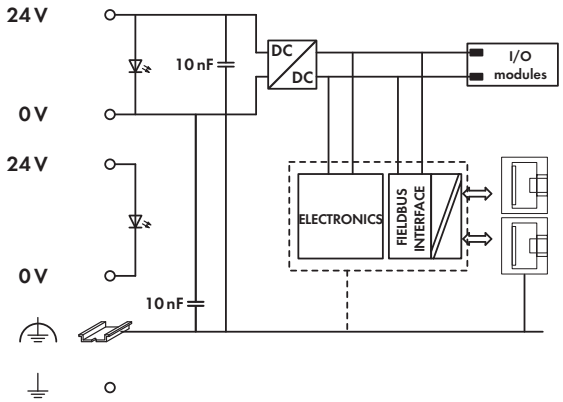

Technical Data

Number of I/O modules	64
with bus extension	250
Max. input process image	1020 words
Max. output process image	1020 words
Configuration	via PC
Program memory	1024 Kbytes
Data memory	1024 Kbytes
Non-volatile memory (retain)	32 Kbytes
Power supply	24 V DC (-25 % ... +30 %)
Input current typ. at rated load (24 V)	500 mA
Efficiency of the power supply (typ.) at nominal load (24 V)	90 %
Internal current consumption (5 V)	450 mA
Total current for I/O modules (5 V)	1700 mA
Isolation	500V system/supply

General Specifications

Operating temperature	0 °C ... +55 °C
Wire connection	CAGE CLAMP®
Cross sections	0.08 mm² ... 2.5 mm² / AWG 28 ... 14
Strip lengths	8 ... 9 mm / 0.33 in
Dimensions (mm) W x H x L	62 x 65 x 100
	Height from upper-edge of DIN 35 rail
Weight	164 g
Storage temperature	-25 °C ... +85 °C
Relative air humidity (no condensation)	95 %
Vibration resistance	acc. to IEC 60068-2-6
Shock resistance	acc. to IEC 60068-2-27
Degree of protection	IP20
EMC immunity of interference	acc. to EN 61000-6-2, marine applications
EMC emission of interference	acc. to EN 61000-6-3, marine applications

PLC - ETHERNET Media Redundancy Programmable Fieldbus Controller

32-bit CPU, multitasking

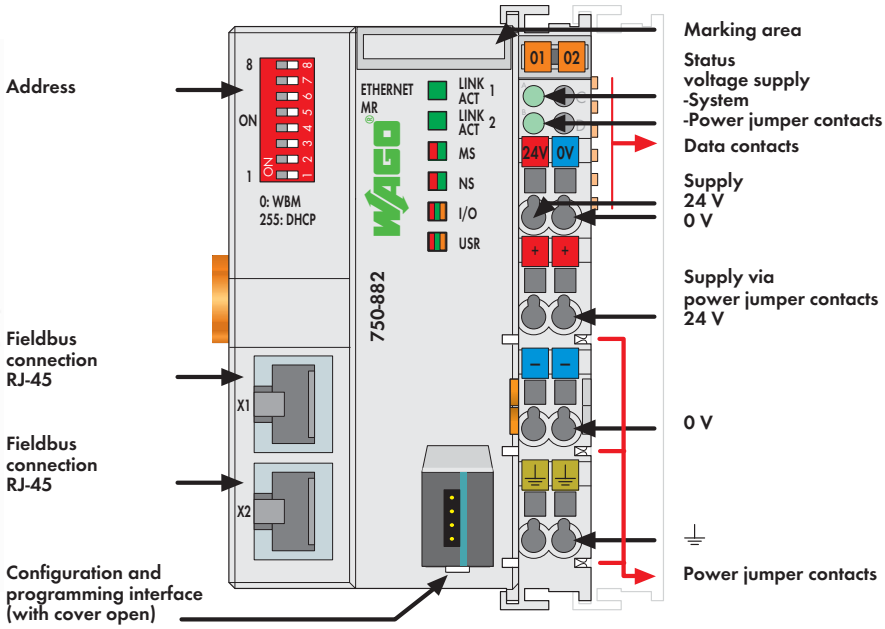

In conjunction with the WAGO-I/O-SYSTEM, the 750-882 ETHERNET PLC is used in ETHERNET networks requiring fast and safe media redundancy.
The PLC supports all digital, analog and specialty modules found within the 750/753 Series, and is suitable for data rates of 10/100 Mbit/s.
Media redundancy is achieved by operating the controller in two separate networks, in which it is accessible via two different IP addresses (including two MAC IDs). Cross communication between separate channels is not possible.
The two separate ETHERNET interfaces allow redundant connection of two transmission paths (no hub or switch required). Both interfaces support Auto-Negotiation and Auto-MDI(X). The DIP switch configures the last byte of both default IP address and may be used for IP address assignment (DHCP, BootP).

The media redundancy controller is designed for fieldbus communication via MODBUS in ETHERNET networks. It also supports a wide variety of standard ETHERNET protocols (e.g., HTTP, BootP, DHCP, DNS, FTP). An integrated Web server provides the user with configuration options and status information from the controller.
The IEC 61131-3 programmable controller is multitasking-capable and features a battery-backed RTC.

Description	Item No.	Pack. Unit
Media Redundancy ETHERNET Controller	**750-882**	1

Accessories		Item No.	Pack. Unit
WAGO-I/O-PRO V2.3, RS-232 kit		**759-333**	1
Miniature WSB Quick marking system			
	plain	**248-501**	5
	with marking	see Section 11	

Approvals

Conformity marking	CE
Korea Certification	
Marine applications	ABS, BV, DNV, GL, KR, LR, NKK, PRS, RINA
UL 508	
ANSI/ISA 12.12.01	Class I, Div. 2, Grp. ABCD, T4
TÜV 07 ATEX 554086 X	I M2 Ex d I Mb, II 3 G Ex nA IIC T4 Gc, II 3 D Ex tc IIIC T135°C Dc
IECEx TUN 09.0001 X	Ex d I Mb, Ex nA IIC T4 Gc, Ex tc IIIC T135°C Dc

System Data

No. of controllers connected to Master	limited by ETHERNET specification
Transmission medium	Twisted Pair S-UTP 100 Ω, Cat 5; Max. line length: 100 m
Baud rate	10/100 Mbit/s
Transmission performance	Class D acc. to EN 50173
Buscoupler connection	2 x RJ-45
Protocols	EtherNet/IP, MODBUS/TCP (UDP), HTTP, BootP, DHCP, DNS, SNTP, FTP, SNMP
Programming	WAGO-I/O-PRO V2.3
IEC 61131-3	IL, LD, FBD (CFC), ST, FC
Redundancy function	via two logically separated ETHERNET interfaces

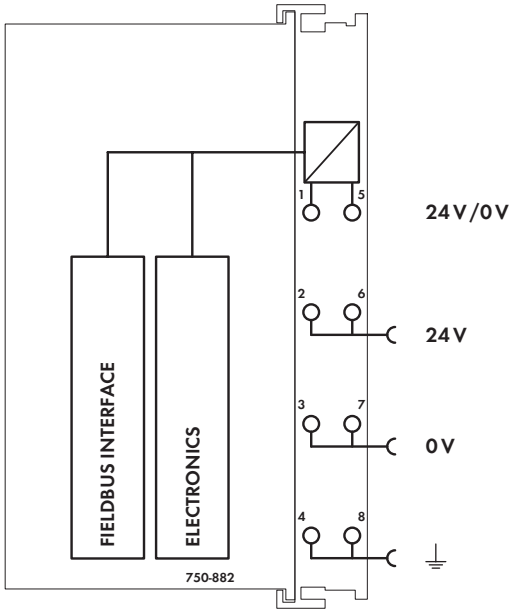

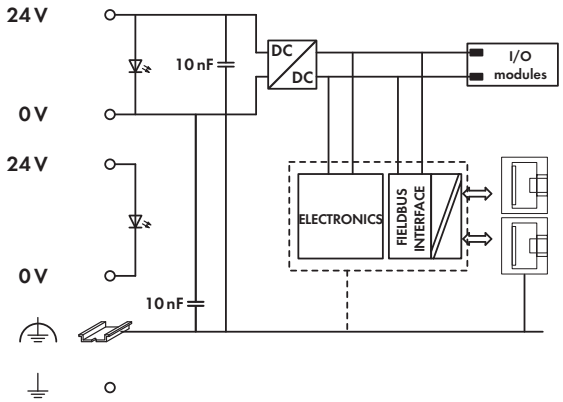

Technical Data

Number of I/O modules	64
with bus extension	250
Max. input process image	1020 words
Max. output process image	1020 words
Configuration	via PC
Program memory	1024 Kbytes
Data memory	512 Kbytes
Non-volatile memory (retain)	32 Kbytes
Power supply	24 V DC (-25 % ... +30 %)
Input current typ. at rated load (24 V)	500 mA
Efficiency of the power supply (typ.) at nominal load (24 V)	90 %
Internal current consumption (5 V)	450 mA
Total current for I/O modules (5 V)	1700 mA
Isolation	500V system/supply

General Specifications

Operating temperature	0 °C ... +55 °C
Wire connection	CAGE CLAMP®
Cross sections	0.08 mm² ... 2.5 mm² / AWG 28 ... 14
Strip lengths	8 ... 9 mm / 0.33 in
Dimensions (mm) W x H x L	62 x 65 x 100
	Height from upper-edge of DIN 35 rail
Weight	164 g
Storage temperature	-25 °C ... +85 °C
Relative air humidity (no condensation)	95 %
Vibration resistance	acc. to IEC 60068-2-6
Shock resistance	acc. to IEC 60068-2-27
Degree of protection	IP20
EMC immunity of interference	acc. to EN 61000-6-2, marine applications
EMC emission of interference	acc. to EN 61000-6-3, marine applications

PLC - Programmable Fieldbus Telecontroller

32-bit CPU, multitasking

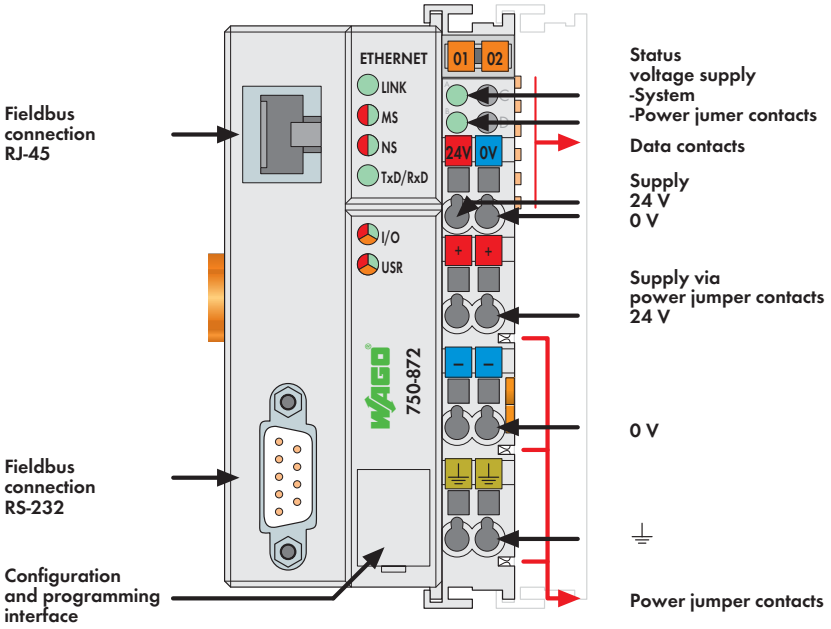

This PLC from the WAGO-I/O-SYSTEM meets all requirements for telecontrol technology applications.

The controller offers many different application protocols for I/O data control (MODBUS TCP/-RTU, IEC 60870-5-101/-104, 3964R, RK512, Ethernet/IP) or for system management and diagnostics (HTTP, BootP, DHCP, DNS, SNTP, FTP, SNMPand SMTP).
For Web-based applications, HTML pages can be generated on an internal server. Programs are directly accessible via XML and ASP. Furthermore, the PLC incorporates library functions for e-mail, SOAP, ASP, IP configuration, ETHERNET sockets and file system.

The PLC has a battery-backed RTC and 32-bit multitasking CPU. Programming PLC applications is performed in compliance with IEC 61131-3.
The programmer can access all fieldbus and I/O data.

IEC 60870-5-101/-103/-104, IEC 61850 and IEC 61400-25 telecontrol protocols can be accessed via CoDeSys function blocks.

For users who do not want to write a PLC program, protocols may also simply be configured via CoDeSys tool.

Description	Item No.	Pack. Unit
Telecontrol Controller RJ-45 + D-Sub	**750-872**	1

Accessories	Item No.	Pack. Unit
WAGO-I/O-PRO V2.3, RS-232 kit	**759-333**	1
Miniature WSB Quick marking system		
plain	**248-501**	5
with marking	see Section 11	

Approvals

Conformity marking	CE
Korea Certification	
UL 508	
ANSI/ISA 12.12.01	Class I, Div. 2, Grp. ABCD, T4
TÜV 07 ATEX 554086 X	I M2 Ex d I Mb, II 3 G Ex nA IIC T4 Gc, II 3 D Ex tc IIIC T135°C Dc
IECEx TUN 09.0001 X	Ex d I Mb, Ex nA IIC T4 Gc, Ex tc IIIC T135°C Dc

System Data

System data ETHERNET:	
No. of controllers connected to Master	limited by ETHERNET specification
Transmission medium	Twisted Pair S-UTP 100 Ω Cat 5
Max. length of fieldbus segment	100 m hub station and 750-872; max. length of network limited by ETHERNET specification
Baud rate	10/100 Mbit/s
Buscoupler connection	RJ-45
Protocols	MODBUS/TCP (UDP), EtherNet/IP, HTTP, BootP, DHCP, DNS, NTP, SNTP, FTP, SNMP
System data Serial:	
No. of controllers connected to Master	limited
Transmission medium	Shielded Cu cable 2 (4) x 0.25 mm²
Max. length of fieldbus segment	1200 m (depending on baud rate/cable)
Baud rate	9600 baud ... 115 200 baud
Buscoupler connection	1 x D-Sub 9; socket
Libraries	IEC 60870-5-101/-103/-104, 3964R/ RK512, IEC 61850, IEC 61400-25, DNP3
Programming	WAGO-I/O-PRO V2.3
IEC 61131-3	IL, LD, FBD (CFC), ST, FC

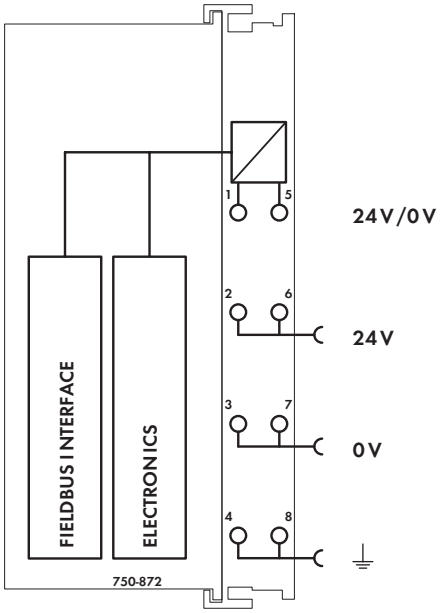

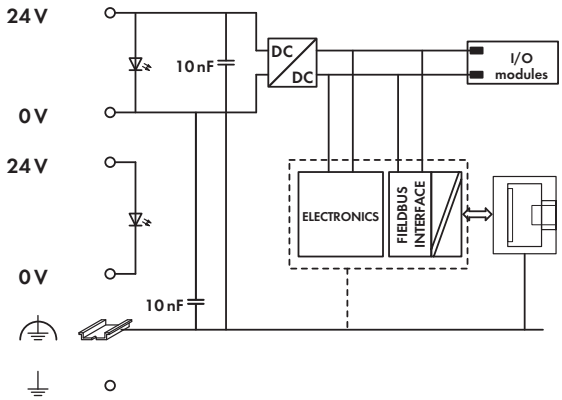

Technical Data

Number of I/O modules	64
with bus extension	250
Max. input process image	2 Kbytes
Max. output process image	2 Kbytes
Max. input variables	512 bytes
Max. output variables	512 bytes
Configuration	via PC
Program memory	1024 Kbytes
Data memory	1024 Kbytes
Non-volatile memory (retain)	30 Kbytes (18 Kbytes retain, 12 Kbytes flag)
File system	2 Mbytes
Power supply	24 V DC (-25 % ... +30 %)
Max. input current (24 V)	500 mA
Power supply efficiency	87 %
Internal current consumption (5 V)	300 mA
Total current for I/O modules (5 V)	1700 mA
Isolation	500V system/supply
Voltage via power jumper contacts	24 V DC (-25 % ... +30 %)
Current via power jumper contacts (max.)	10 A DC
IEC60870-5-101 and -104 library	
Document of conformity	see www.wago.com
Number of control stations	4
Number of information objects	150
Functions	Client and server
IEC 61850 and 61400-25 library	
Document of conformity	see www.wago.com
Function	Server

General Specifications

Operating temperature	0 °C ... +55 °C
Wire connection	CAGE CLAMP®
Cross sections	0.08 mm² ... 2.5 mm² / AWG 28 ... 14
Strip lengths	8 ... 9 mm / 0.33 in
Dimensions (mm) W x H x L	51 x 65 x 100
	Height from upper-edge of DIN 35 rail
Weight	184 g
Storage temperature	-25 °C ... +85 °C
Relative air humidity (no condensation)	95 %
Vibration resistance	acc. to IEC 60068-2-6
Shock resistance	acc. to IEC 60068-2-27
Degree of protection	IP20
EMC immunity of interference	acc. to EN 61000-6-2
EMC emission of interference	acc. to EN 61000-6-4

PLC - ETHERNET TCP/IP Programmable Fieldbus Controller, RS-232

32-bit CPU, multitasking

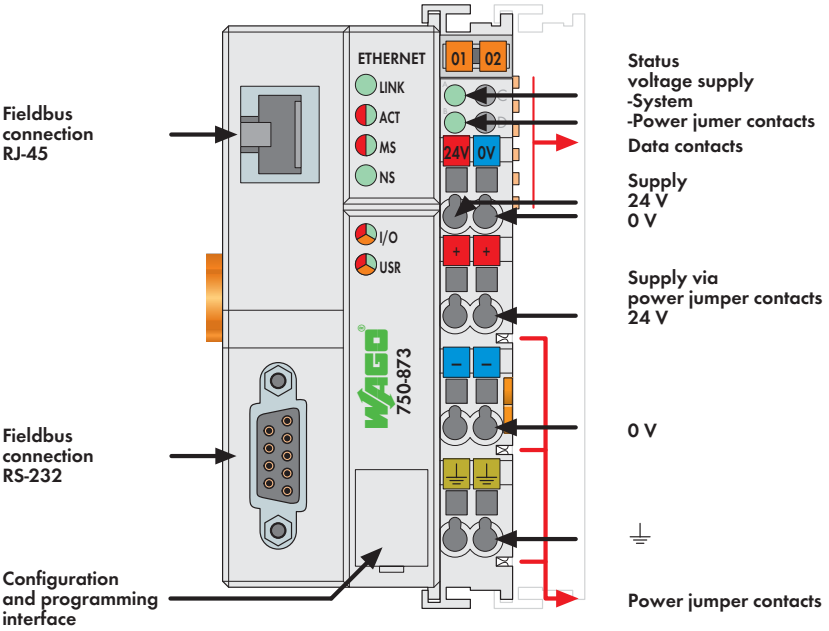

This PLC connects ETHERNET to the WAGO-I/O-SYSTEM.
The controller automatically configures, creating a local process image which may include analog, digital or specialty modules. Analog and specialty module data is sent via words and/or bytes; digital data is sent bit by bit.
The controller is capable of 10/100 Mbit/s data rates and is programmable in accordance with IEC 61131-3. The controller provides 512 KB program memory, 256 KB data memory and 24 KB retain memory for this.
It is capable of multitasking, has a battery-backed, real-time clock and is based on a 32-bit CPU.
The PLC offers many different application protocols which can be used for data acquisition or control (MODBUS, ETHERNET/IP) or for system management and diagnostics (HTTP, BootP, DHCP, DNS, SNTP, FTP, SNMP and SMTP).

For Web-based applications, HTML pages can be generated on an internal server.
The integrated RS-232 interface communicates with external devices.
The PLC can also be addressed as Modbus RTU slave via RS-232 interface.

Description	Item No.	Pack. Unit
ETHERNET TCP/IP RS-232 Controller	**750-873**	1

Accessories	Item No.	Pack. Unit
WAGO-I/O-PRO V2.3, RS-232 kit	**759-333**	1
Miniature WSB Quick marking system		
plain	**248-501**	5
with marking	see Section 11	

Approvals

Conformity marking	CE
Korea Certification	
Marine applications	ABS, BV, DNV, GL, KR, LR, NKK, PRS, RINA
UL 508	
ANSI/ISA 12.12.01	Class I, Div. 2, Grp. ABCD, T4
TÜV 07 ATEX 554086 X	I M2 Ex d I Mb, II 3 G Ex nA IIC T4 Gc, II 3 D Ex tc IIIC T135°C Dc
IECEx TUN 09.0001 X	Ex d I Mb, Ex nA IIC T4 Gc, Ex tc IIIC T135°C Dc

System Data

System data ETHERNET:	
No. of controllers connected to Master	limited by ETHERNET specification
Transmission medium	Twisted Pair S-UTP 100 Ω Cat 5
Max. length of fieldbus segment	100 m hub station and 750-873; max. length of network limited by ETHERNET specification
Baud rate	10/100 Mbit/s
Buscoupler connection	RJ-45
Protocols	MODBUS/TCP (UDP), EtherNet/IP, HTTP, BootP, DHCP, DNS, SNTP, FTP, SNMP
System data Serial:	
Transmission medium	shielded Cu cable 2 (4) x 0.25 mm²
Max. length of fieldbus segment	15 m depending on the baud rate / on the cable (at 19200 baud)
Baud rate	9600 baud ... 115 200 baud
Buscoupler connection	1 x D-Sub 9; socket
Programming	WAGO-I/O-PRO V2.3
IEC 61131-3	IL, LD, FBD (CFC), ST, FC

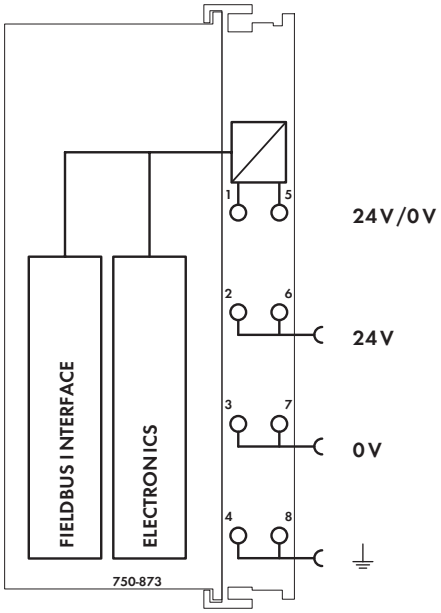

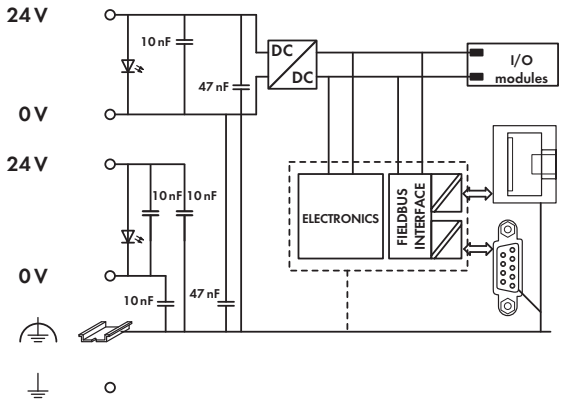

Technical Data

Number of I/O modules	64
with bus extension	250
Max. input process image	2 Kbytes
Max. output process image	2 Kbytes
Max. input variables	512 bytes
Max. output variables	512 bytes
Configuration	via PC
Program memory	512 Kbytes
Data memory	256 Kbytes
Non-volatile memory (retain)	24 Kbytes (16 Kbytes retain, 8 Kbytes flag)
Power supply	24 V DC (-25 % ... +30 %)
Max. input current (24 V)	500 mA
Power supply efficiency	87 %
Internal current consumption (5 V)	300 mA
Total current for I/O modules (5 V)	1700 mA
Isolation	500V system/supply
Voltage via power jumper contacts	24 V DC (-25 % ... +30 %)
Current via power jumper contacts (max.)	10 A DC

General Specifications

Operating temperature	0 °C ... +55 °C
Wire connection	CAGE CLAMP®
Cross sections	0.08 mm² ... 2.5 mm² / AWG 28 ... 14
Strip lengths	8 ... 9 mm / 0.33 in
Dimensions (mm) W x H x L	51 x 65 x 100
	Height from upper-edge of DIN 35 rail
Weight	193.4 g
Storage temperature	-25 °C ... +85 °C
Relative air humidity (no condensation)	95 %
Vibration resistance	acc. to IEC 60068-2-6
Shock resistance	acc. to IEC 60068-2-27
Degree of protection	IP20
EMC immunity of interference	acc. to EN 61000-6-2, marine applications
EMC emission of interference	acc. to EN 61000-6-3, marine applications

PLC - ETHERNET Programmable Fieldbus Controller ECO

32-bit CPU

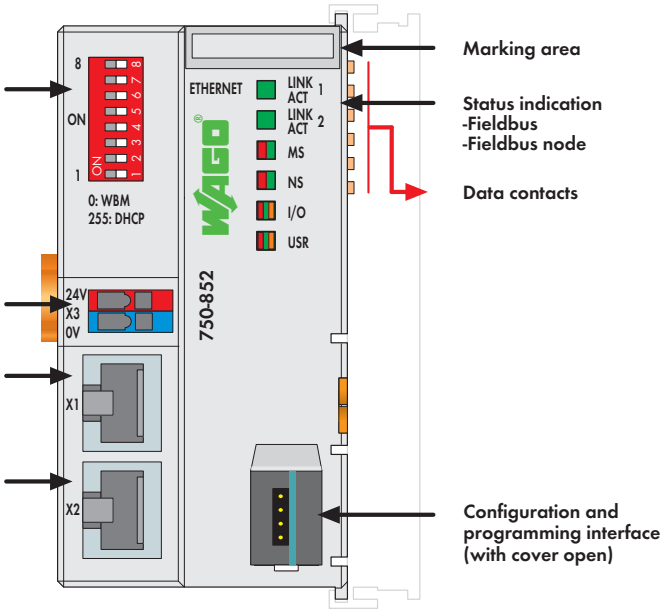

The 750-852 ETHERNET PLC connects ETHERNET to the modular WAGO-I/O-SYSTEM.

The PLC automatically configures, creating a local process image which may include analog, digital or specialty modules. Analog and specialty module data is sent via words and/or bytes; digital data is sent bit by bit.

Two ETHERNET interfaces and an integrated switch allow the fieldbus to be wired in a line topology. This eliminates additional network devices, such as switches or hubs. Both interfaces support Auto-Negotiation and Auto-MDI(X).

The DIP switch configures the last byte of the IP address and may be used for IP address assignment.

The PLC is designed for fieldbus communication in both EtherNet/IP and MODBUS networks. It also supports a wide variety of standard ETHERNET protocols (e.g., HTTP, BootP, DHCP, DNS, SNTP, FTP). An integrated Web server provides the user with configuration options and status information from the controller. The IEC 61131-3 programmable controller is multitasking-capable.

Description	Item No.	Pack. Unit
ETHERNET ECO Controller	**750-852**	1

Accessories	Item No.	Pack. Unit
WAGO-I/O-PRO V2.3, RS-232 kit	**759-333**	1
Miniature WSB Quick marking system		
plain	**248-501**	5
with marking	see Section 11	

Approvals

Conformity marking	CE
Marine applications	GL
UL 508	
ANSI/ISA 12.12.01	Class I, Div. 2, Grp. ABCD, T4

System Data

No. of controllers connected to Master	limited by ETHERNET specification
Transmission medium	Twisted Pair S-UTP
	100 Ω, Cat 5;
	Max. line length: 100 m
Baud rate	10/100 Mbit/s
Transmission performance	Class D acc. to EN 50173
Buscoupler connection	2 x RJ-45
Protocols	EtherNet/IP, MODBUS/TCP (UDP), HTTP,
	BootP, DHCP, DNS, SNTP, FTP
Programming	WAGO-I/O-PRO V2.3
IEC 61131-3	IL, LD, FBD (CFC), ST, FC

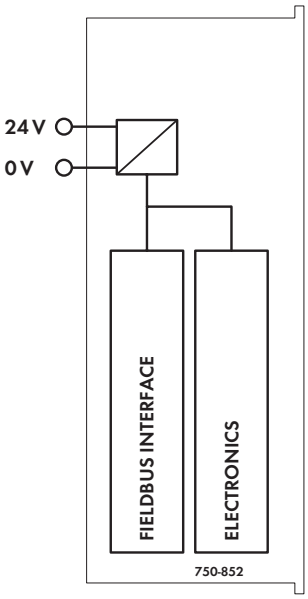

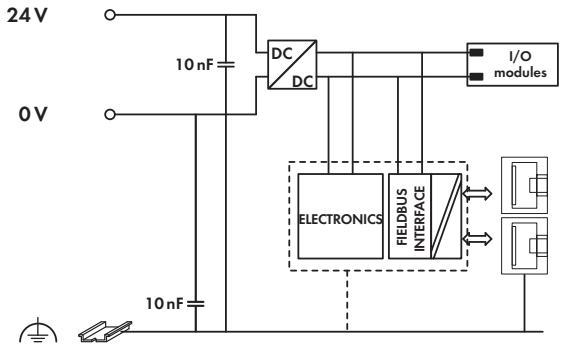

Technical Data

Number of I/O modules	64
with bus extension	250
Max. input process image	1020 words
Max. output process image	1020 words
Configuration	via PC
Program memory	512 Kbytes
Data memory	256 Kbytes
Non-volatile memory (retain)	8 Kbytes
Power supply	24 V DC (-25 % ... +30 %)
Input current typ. at rated load (24 V)	300 mA
Efficiency of the power supply (typ.) at nominal load (24 V)	90 %
Internal current consumption (5 V)	400 mA
Total current for I/O modules (5 V)	700 mA
Isolation	500V system/supply

General Specifications

Operating temperature	0 °C ... +55 °C
Wire connection	CAGE CLAMP®
Cross sections	0.08 mm² ... 1.5 mm² / AWG 28 ... 14
Strip lengths	5 ... 6 mm / 0.22 in
Dimensions (mm) W x H x L	50 x 65 x 97
	Height from upper-edge of DIN 35 rail
Weight	83.1 g
Storage temperature	-25 °C ... +85 °C
Relative air humidity (no condensation)	95 %
Vibration resistance	acc. to IEC 60068-2-6
Shock resistance	acc. to IEC 60068-2-27
Degree of protection	IP20
EMC immunity of interference	acc. to EN 61000-6-2, marine applications
EMC emission of interference	acc. to EN 61000-6-3, marine applications

KNX IP Programmable Fieldbus Controller

32-bit CPU, multitasking

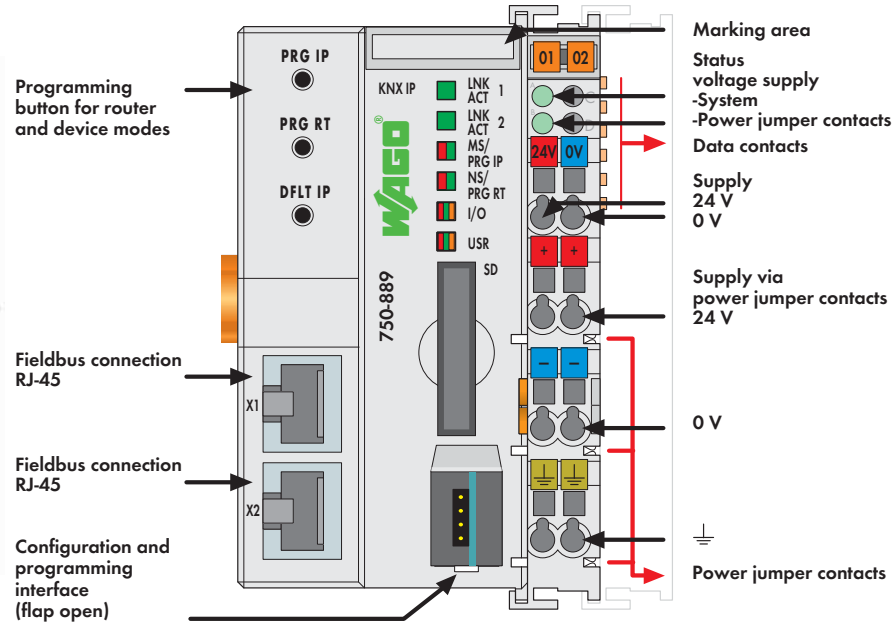

This controller can accommodate up to two KNX logic devices at the same time.

- 1. In conjunction with the WAGO-I/O-SYSTEM, the KNX IP Controller is used as a user-programmable application controller within KNX IP networks. The controller supports all digital, analog and specialty modules found within the 750/753 Series. The IEC 61131-3 programmable controller is capable of 10/100 Mbit/s data rates. KNX objects of any type (EIS/DPT) can be created using the programming tool. Libraries including pre-made function blocks are readily available on the WAGO Web site for programming. The controller supports a maximum of 253 communication objects, as well as 254 group addresses and associations.
- 2. Combined with the KNX/EIB/TP1 Module, the 750-889 KNX IP Controller can operate as a router on an IP backbone (ETHERNET). No IEC application is required for router functionality.

Both devices are commissioned and configured within the ETS software using the WAGO product database. The software includes a plug-in that automatically installs and opens for configuration.
The KNX IP controller features an integrated 2-port 10/100 Mbit/s switch and allows easy line structure creation without additional network components. The maximum number of controllers that can be wired in series is 20.
An internal server is available for Web-based applications.
The controller provides 1024 KB program memory, 1024 KB data memory and 32 KB retain memory. It is capable of multitasking, has a battery-backed, real-time clock and is based on a 32-bit CPU. The controller offers many different application protocols for control tasks (MODBUS, KNXnet/IP) or for system management and diagnostics (HTTP, BootP, DHCP, DNS, AutoIP, SNTP, FTP, SNMP and SMTP).
The number of KNX/EIB/TP1 Modules (750-646) supported by the KNX IP Controller does not depend on the application.

Description	Item No.	Pack. Unit
KNX IP Controller	**750-889**	1

Accessories		Item No.	Pack. Unit
SD memory card, 2 GB		**758-879/000-001**	1
WAGO-I/O-PRO V2.3, RS-232 kit		**759-333**	1
WAGO ETS3/4 plug-in (included in WAGO ETS3 product database)		see Section 1	
Miniature WSB Quick marking system			
	plain	**248-501**	5
	with marking	see Section 11	

Approvals

KNX certified	IP controller: 61/8316/08; IP router: 61/8317/08
Conformity marking	CE

System Data

No. of controllers	limited by network topology
Transmission medium	S-UTP 100 Ω Cat. 5
Max. length of fieldbus segment	100 m limited by IEEE 802.3
Max. length of network	≤ 2000 m; max. 20 controllers in series
Baud rate	10/100 Mbit/s
Buscoupler connection	2 x RJ-45 (linked via 2-port switch)
Protocols	KNXnet/IP, MODBUS/TCP (UDP), HTTP, BootP, DHCP, DNS, AutoIP, SNTP, FTP, SNMP V3, SMTP
Programming	WAGO-I/O-PRO V2.3
IEC 61131-3	IL, LD, FBD (CFC), ST, FC
SD card slot	Push-push mechanism, sealing lid
Type of memory card	SD and SDHC up to 32 GB (All guaranteed properties are only valid in connection with the WAGO 758-879/000-001 memory card.)
KNX-specific	
KNX/TP1 bus specification	1.0
Commissioning (KNX side)	with ETS3/4 plug-in, 2 programming buttons
Device mode:	
Number of communication objects	253
Number of group addresses	254
Max. number of KNX logic devices, simultaneous	2; 1. device, 2. router (with 1. KNX/EIB/TP1 module)

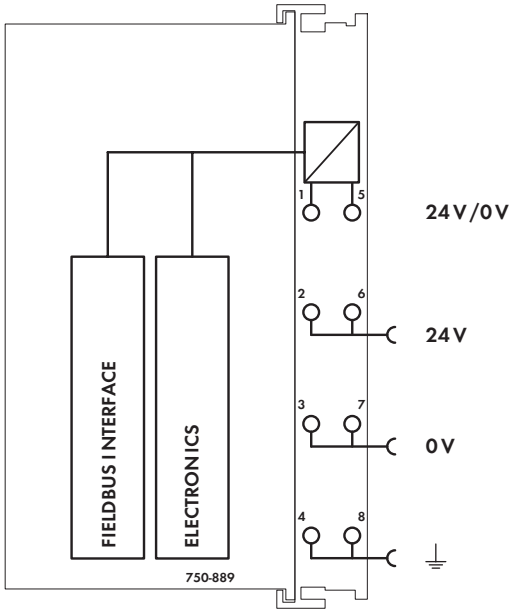

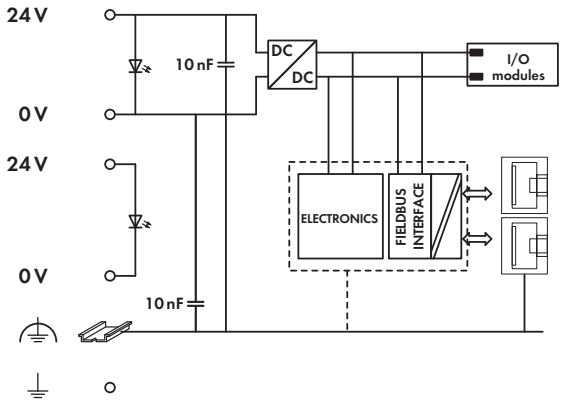

Technical Data

Number of I/O modules	64
with bus extension	250
Configuration	via PC
Program memory	1024 Kbytes
Data memory	1024 Kbytes
Non-volatile memory (retain)	32 Kbytes
Power supply	24 VDC (-25 % ... +30 %)
Input current typ. at rated load (24 V)	500 mA
Efficiency of the power supply (typ.) at	
nominal load (24 V)	90 %
Internal current consumption (5 V)	450 mA
Total current for I/O modules (5 V)	1700 mA
Isolation	500 V system/supply
Fieldbus (Modbus/TCP)	
Max. input process image	2 Kbytes
Max. output process image	2 Kbytes
Max. input variables	512 bytes
Max. output variables	512 bytes

General Specifications

Operating temperature	0 °C ... +55 °C
Wire connection	CAGE CLAMP®
Cross sections	0.08 mm² ... 2.5 mm² / AWG 28 ... 14
Strip lengths	8 ... 9 mm / 0.33 in
Dimensions (mm) W x H x L	62 x 65 x 100
	Height from upper-edge of DIN 35 rail
Weight	193.9 g
Storage temperature	-25 °C ... +85 °C
Relative air humidity (no condensation)	95 %
Vibration resistance	acc. to IEC 60068-2-6
Shock resistance	acc. to IEC 60068-2-27
Degree of protection	IP20
EMC immunity of interference	acc. to EN 61000-6-2
EMC emission of interference	acc. to EN 61000-6-3

BACnet/IP Programmable Fieldbus Controller

32-bit CPU, multitasking

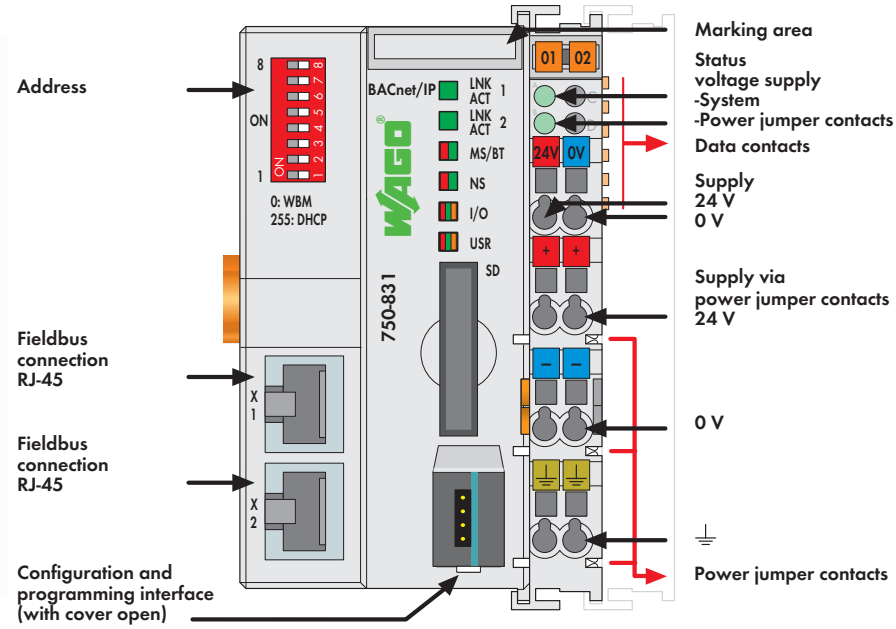

The 750-831 BACnet/IP Controller connects the WAGO-I/O-SYSTEM to the BACnet protocol. The 750-831 Controller supports the B-BC BACnet device profile according to DIN EN ISO 16484-5. It communicates with other BACnet devices via BACnet/IP.
The controller provides the three following functionalities:

- 1. Native server: For each channel, appropriate BACnet objects are generated automatically for the digital/analog input and output modules that are connected to the controller.
- 2. Application server: Other supported BACnet objects can be created via IEC -61131-3 programming environment and made available to a BACnet network.
- 3. Application client: Using the client functionality, objects and their properties can be accessed by other BACnet devices.

Two ETHERNET interfaces and an integrated switch allow the fieldbus to be wired in a line topology. This eliminates additional network devices, such as switches or hubs. Both interfaces support Auto-Negotiation and Auto-MDI(X).
The DIP switch configures the last byte of the IP address and may be used for IP address assignment.
An integrated Web server provides configuration options to the user, while displaying controller's status information.
The IEC 61131-3 programmable controller is multitasking-capable and features a battery-backed RTC. A data memory of 1 MB is available.
The 750-831 Controller has a slot for a removable memory card, allowing device parameters or files (e.g., boot files) to be transferred from one controller to another. The memory card can be accessed via FTP and be used as an additional drive.
Start-up and configuration of the BACnet networks is performed using the Windows-compliant WAGO BACnet Configurator.

Description	Item No.	Pack. Unit
BACnet/IP Controller	**750-831**	1

Accessories	Item No.	Pack. Unit
WAGO BACnet configurator	see Section 1	
SD memory card, 2 GB	**758-879/000-001**	1
WAGO-I/O-PRO V2.3, RS-232 kit	**759-333**	1
Miniature WSB Quick marking system		
plain	**248-501**	5
with marking	see Section 11	

Approvals

BACnet approvals	
WSPCert certification	ISO 16484-5:2012
BTL listing	BTL (BACnet® Testing Labs Product Listing)
AMEV-Testat	AMEV profile AS-A
Conformity marking	CE
UL 508	

System Data

No. of controllers connected to Master	limited by ETHERNET specification
Transmission medium	Twisted Pair S-UTP
	100 Ω, Cat 5;
	Max. line length: 100 m
Baud rate	10/100 Mbit/s
Transmission performance	Class D acc. to EN 50173
Buscoupler connection	2 x RJ-45
Protocols	BACnet/IP, MODBUS/TCP (UDP), HTTP,
	BootP, DHCP, DNS, SNTP, FTP, SNMP
Programming	WAGO-I/O-PRO V2.3
IEC 61131-3	IL, LD, FBD (CFC), ST, FC
SD card slot	Push-push mechanism, sealable cover lid
Type of memory card	SD and SDHC up to 32 GB (All
	guaranteed properties are only valid in
	connection with the WAGO 758-879/
	000-001 memory card.)
BACnet device profile	B-BC (BACnet Building Controller)
BACnet version	1.7

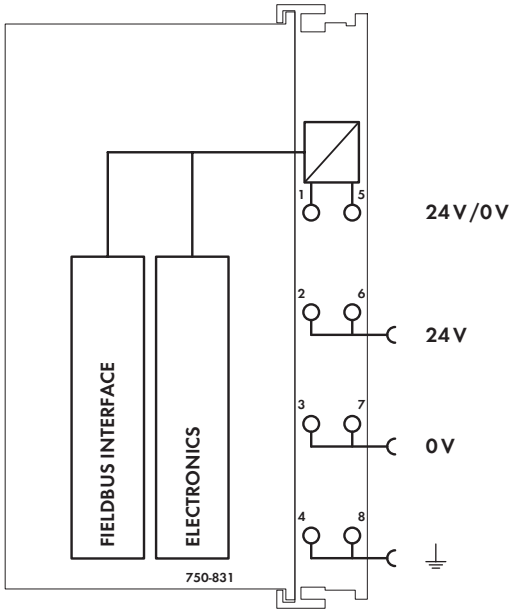

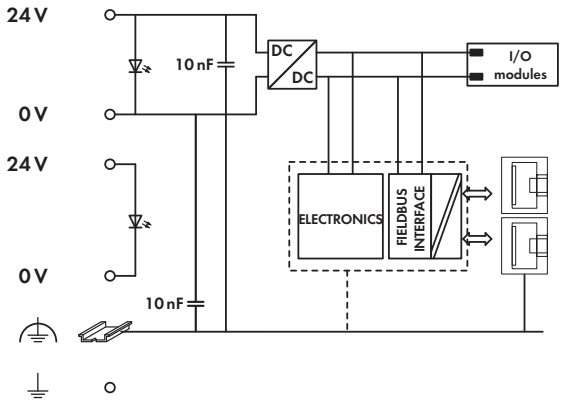

Technical Data

Number of I/O modules	64
with bus extension	99
Max. input process image	1020 words
Max. output process image	1020 words
Configuration	via PC
Program memory	1024 Kbytes
Data memory	1024 Kbytes
Non-volatile memory (retain)	28 Kbytes
Flash	4.5 Mbytes
Power supply	24 V DC (-25 % ... +30 %)
Input current typ. at rated load (24 V)	500 mA
Efficiency of the power supply (typ.) at	
nominal load (24 V)	90 %
Internal current consumption (5 V)	450 mA
Total current for I/O modules (5 V)	1700 mA
Isolation	500V system/supply

General Specifications

Operating temperature	0 °C ... +55 °C
Wire connection	CAGE CLAMP®
Cross sections	0.08 mm² ... 2.5 mm² / AWG 28 ... 14
Strip lengths	8 ... 9 mm / 0.33 in
Dimensions (mm) W x H x L	62 x 65 x 100
	Height from upper-edge of DIN 35 rail
Weight	161.8 g
Storage temperature	-25 °C ... +85 °C
Relative air humidity (no condensation)	95 %
Vibration resistance	acc. to IEC 60068-2-6
Shock resistance	acc. to IEC 60068-2-27
Degree of protection	IP20
EMC immunity of interference	acc. to EN 61000-6-2
EMC emission of interference	acc. to EN 61000-6-3

BACnet/IP Programmable Fieldbus Controller

32-bit CPU, multitasking

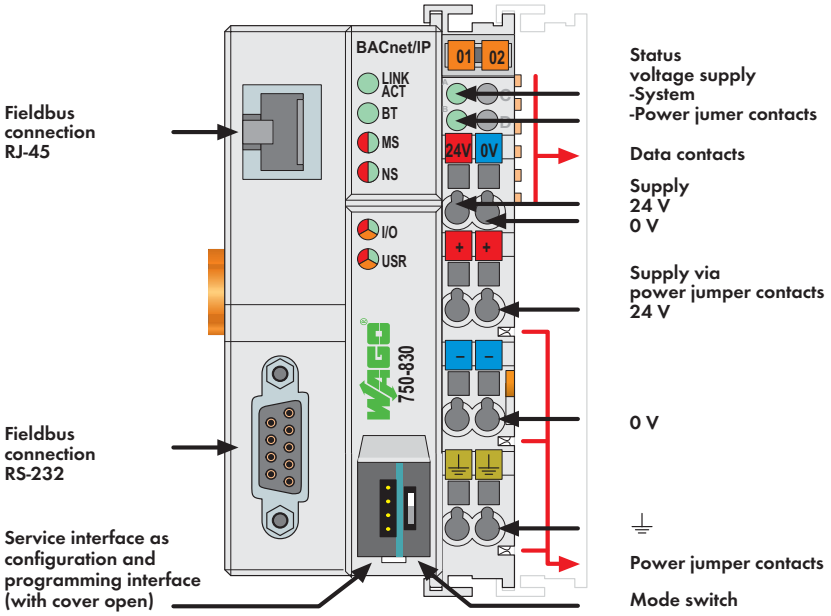

The 750-830 BACnet PLC connects the WAGO-I/O-SYSTEM to the BACnet protocol.
The 750-830 Controller corresponds to BACnet B-BC device profile according to DIN EN ISO 16484-5.
The controller provides the three following functionalities:

- 1. Native server: For each channel, appropriate BACnet objects are generated automatically for the digital, analog input and output modules that are connected to the controller.
- 2. Application server: Other supported BACnet objects can be created via IEC -61131-3 programming environment.
- 3. Application client: Using the client functionality, objects and their properties can be accessed by other BACnet devices.

Access to BACnet/IP networks is provided by the controller's RJ-45 interface. The integrated RS-232 interface communicates with external devices. The controller can also be addressed as Modbus RTU slave via RS-232 interface.
Programming PLC applications is performed in compliance with IEC 61131-3. It is capable of multitasking, has a battery-backed, real-time clock and is based on a 32-bit CPU.
For Web-based applications, HTML pages can be generated on an internal server.
Start-up and configuration of the BACnet networks is performed using the Windows-compliant WAGO BACnet Configurator.

Description	Item No.	Pack. Unit
BACnet/IP Controller	**750-830**	1

Accessories		Item No.	Pack. Unit
WAGO BACnet configurator		see Section 1	
WAGO-I/O-PRO V2.3, RS-232 kit		**759-333**	1
Miniature WSB Quick marking system			
	plain	**248-501**	5
	with marking	see Section 11	

Approvals

BACnet approvals	
WSPCert certification	ISO 16484-5:2010
BTL listing	BTL (BACnet® Testing Laboratories)
Conformity marking	CE
Korea Certification	
Marine applications	ABS, BV, DNV, GL, KR, LR, NKK, PRS, RINA
UL 508	
ANSI/ISA 12.12.01	Class I, Div. 2, Grp. ABCD, T4
TÜV 07 ATEX 554086 X	I M2 Ex d I Mb, II 3 G Ex nA IIC T4 Gc, II 3 D Ex tc IIIC T135°C Dc
IECEx TUN 09.0001 X	Ex d I Mb, Ex nA IIC T4 Gc, Ex tc IIIC T135°C Dc

System Data

System data ETHERNET:	
No. of controllers	limited by network topology
Transmission medium	S-UTP 100 Ω Cat 5
Max. length of fieldbus segment	100 m limited by IEEE 802.3
Max. length of network	acc. to IEEE 802.3 standard
Baud rate	10/100 Mbit/s
Buscoupler connection	RJ-45
Protocols	BACnet/IP, MODBUS/TCP (UDP), HTTP, BootP, DHCP, DNS, SNTP, FTP, SNMP V1, SMTP
System data Serial:	
Transmission medium	Shielded Cu cable 2 (4) x 0.25 mm²
Max. length of fieldbus segment	15 m depending on baud rate/cable (at 19200 baud)
Baud rate	9600 baud ... 115 200 baud
Buscoupler connection	1 x D-Sub 9; socket
Programming	WAGO-I/O-PRO V2.3
IEC 61131-3	IL, LD, FBD (CFC), ST, FC
BACnet device profile	B-BC (BACnet Building Controller)
BACnet version	1.7

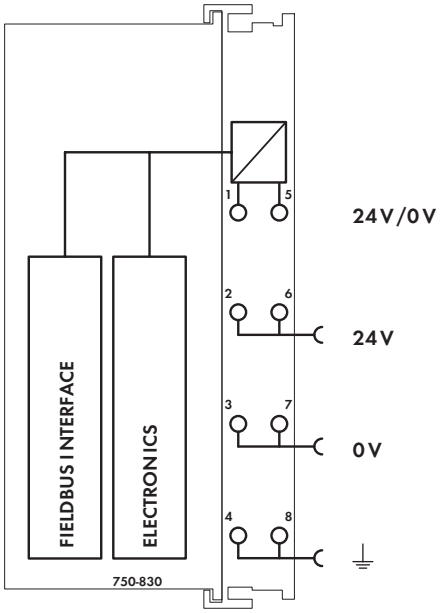

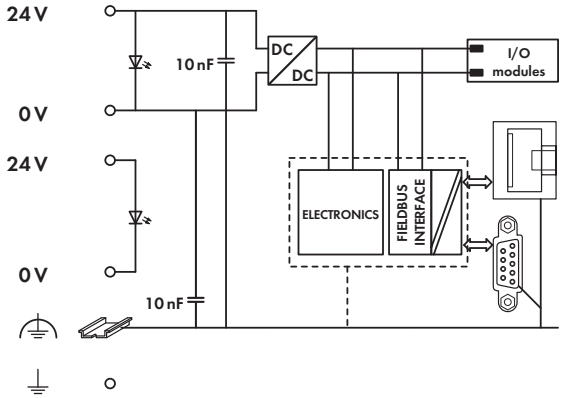

Technical Data

Number of I/O modules	64
with bus extension	250
Configuration	via PC
Program memory	512 Kbytes
Data memory	256 Kbytes
Non-volatile memory (retain)	24 Kbytes (16 Kbytes retain, 8 Kbytes flag)
Flash	4.5 Mbytes
Power supply	24 V DC (-25 % ... +30 %)
Max. input current (24 V)	500 mA
Power supply efficiency	87 %
Internal current consumption (5 V)	300 mA
Total current for I/O modules (5 V)	1700 mA
Isolation	500 V system/supply
Voltage via power jumper contacts	24 V DC (-25 % ... +30 %)
Current via power jumper contacts (max.)	10 A DC
BACnet implementation acc. to	EN ISO 16484-5 =ANSI/ASHRAE 135-2004
Fieldbus (Modbus/TCP):	
Max. input process image	2 Kbytes
Max. output process image	2 Kbytes
Max. input variables	512 bytes
Max. output variables	512 bytes

General Specifications

Operating temperature	0 °C ... +55 °C
Wire connection	CAGE CLAMP®
Cross sections	0.08 mm² ... 2.5 mm² / AWG 28 ... 14
Strip lengths	8 ... 9 mm / 0.33 in
Dimensions (mm) W x H x L	51 x 65 x 100
	Height from upper-edge of DIN 35 rail
Weight	192.4 g
Storage temperature	-25 °C ... +85 °C
Relative air humidity (no condensation)	95 %
Vibration resistance	acc. to IEC 60068-2-6
Shock resistance	acc. to IEC 60068-2-27
Degree of protection	IP20
EMC immunity of interference	acc. to EN 61000-6-2, marine applications
EMC emission of interference	acc. to EN 61000-6-3, marine applications

BACnet MS/TP Programmable Fieldbus Controller

32-bit CPU, multitasking

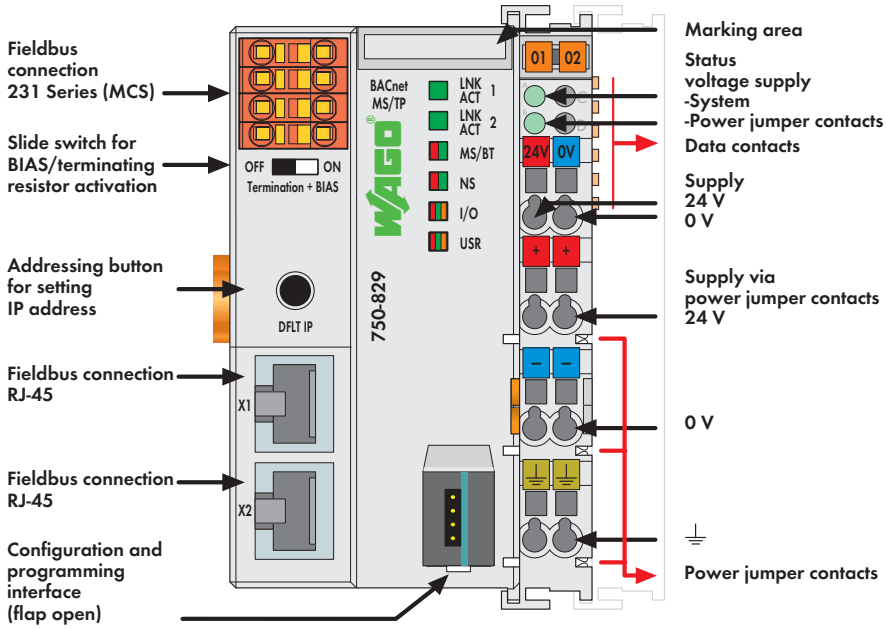

The BACnet MS/TP Controller (750-829) connects the WAGO-I/O-SYSTEM with the BACnet protocol. The 750-829 Controller supports the B-BC BACnet device profile according to DIN EN ISO 16484-5. It communicates with other BACnet devices via BACnet MS/TP.
The controller provides the three following functionalities:

- 1. Native server: For each channel, appropriate BACnet objects are generated automatically for the digital and analog I/O modules that are connected to the controller.
- 2. Application server: Other supported BACnet objects can be created via the IEC 61131-3 programming environment and made available to a BACnet network.
- 3. Application client: Using the client functionality, objects and their properties can be accessed by other BACnet devices.

The IEC 61131-3 programmable controller is multitasking-capable and features a battery-backed RTC.

The ETHERNET service interfaces can be used for IEC downloads, for example. Furthermore, two ETHERNET interfaces and an integrated switch allow the ETHERNET fieldbus to be wired in a line topology. This eliminates the need for additional network devices, such as switches or hubs. Both interfaces support Auto-Negotiation and Auto-MDI(X). An integrated Web server provides configuration options to the user, while displaying controller's status information. The Web server cannot be used via BACnet MS/TP. For initial start-up, access to the Web-based Management (WBM) via standard Web browser is required to set the baud rate and activate the MS/TP fieldbus. Further configuration and commissioning is performed via a Windows-compliant WAGO BACnet Configurator (V1.8 or higher) and requires an additional BACnet router within the network.
The Protocol Implementation Statement (PICS) contains all supported objects, services and properties. The controller supports a maximum of 250 BACnet objects. A slide switch enables the switching on of a terminating resistor together with the BIAS network on the RS-485 interface.

Description	Item No.	Pack. Unit
BACnet MS/TP Controller	**750-829**	1

Accessories	Item No.	Pack. Unit
WAGO BACnet configurator	see Section 1	
WAGO-I/O-PRO V2.3, RS-232 kit	**759-333**	1
Miniature WSB Quick marking system		
plain	**248-501**	5
with marking	see Section 11	
female connector; 4-pole	**231-2304**	

Approvals

BACnet approvals	
WSPCert certification	pending
BTL listing	pending
Conformity marking	CE

System Data

Programming	WAGO-I/O-*PRO*
IEC 61131-3	IL, LD, FBD (CFC), ST, FC
System data BACnet MS/TP	
Baud rate	9600, 19200, 38400*, 57600, 76800, 115200 Baud (per BACnet standard); *Factory default setting
Max. length of fieldbus segment	Depends on baud rate/cable (per BACnet standard) 1200 m at ≤ 76800 baud; 1000 m at > 76800 baud
Buscoupler connection	1 x 4-pole male connector; 231 Series MCS (*MULTI CONNECTION SYSTEM*), female connector 231-2304 (included)
Protocols	BACnet MS/TP
BACnet device profile	B-BC (BACnet Building Controller)
BACnet version	1.7
System data ETHERNET:	
No. of controllers	limited by ETHERNET specification
Transmission medium	Twisted Pair S-UTP, STP 100 Ω Cat 5e
Max. length of fieldbus segment	100 m limited by IEEE 802.3
Max. length of network	acc. to IEEE 802.3 standard
Baud rate	10/100 Mbit/s
Buscoupler connection	2 x RJ-45 (2-port switch)
Protocols	MODBUS/TCP (UDP), HTTP, BootP, DHCP, DNS, SNTP, FTP, SNMP, SMTP

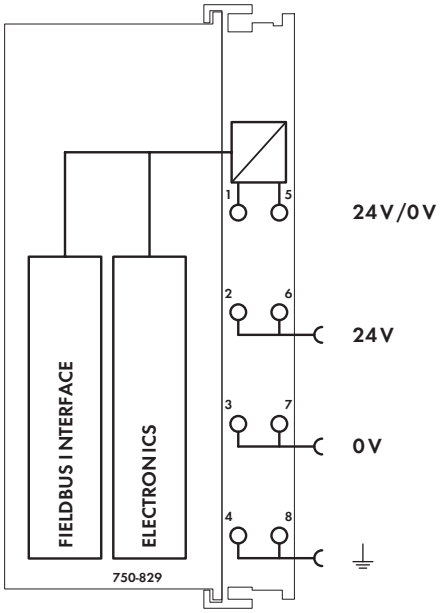

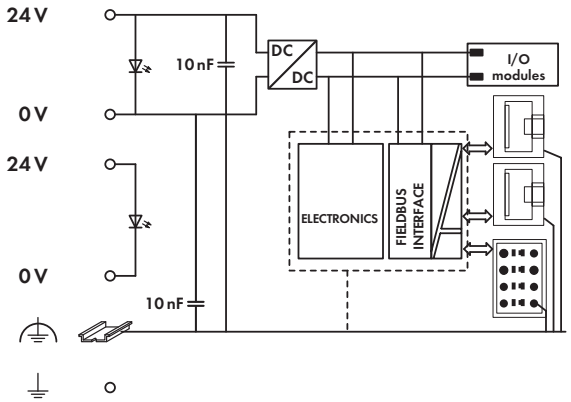

Technical Data

Number of I/O modules	64
with bus extension	99
Configuration	via PC
Program memory	1024 Kbytes
Data memory	1024 Kbytes
Non-volatile memory (retain)	32 Kbytes (16 Kbytes retain, 8 Kbytes flag)
Powerfail RTC buffer	Min. six days
Power supply	24 V DC (-25 % ... +30 %)
Input current typ. at rated load (24 V)	500 mA
Efficiency of the power supply (typ.) at	
nominal load (24 V)	90 %
Internal current consumption (5 V)	450 mA
Total current for I/O modules (5 V)	1700 mA
Isolation	500 V system/supply;
	BACnet MS/TP:
	1500 V (per BACnet standard)
Voltage via power jumper contacts	24 V DC (-25 % ... +30 %)
Current via power jumper contacts (max.)	10 A DC
Fieldbus (Modbus/TCP):	
Max. input process image	2 Kbytes
Max. output process image	2 Kbytes
Max. input variables	512 bytes
Max. output variables	512 bytes

General Specifications

Operating temperature	0 °C ... +55 °C
Wire connection	CAGE CLAMP®
Cross sections	0.08 mm² ... 2.5 mm² / AWG 28 ... 14
Strip lengths	8 ... 9 mm / 0.33 in
Connection type	MCS (MULTI CONNECTION SYSTEM)
Cross sections	0.2 ... 2.5 mm² / 24 ... 12 AWG
Strip lengths	9 ... 10 mm / 0.35 ... 0.39 in
Dimensions (mm) W x H x L	62 x 65 x 100
	Height from upper-edge of DIN 35 rail
Weight	138.3 g
Storage temperature	-25 °C ... +85 °C
Relative air humidity (no condensation)	95 %
Vibration resistance	acc. to IEC 60068-2-6
Shock resistance	acc. to IEC 60068-2-27
Degree of protection	IP20
EMC immunity of interference	acc. to EN 61000-6-2
EMC emission of interference	acc. to EN 61000-6-3

PLC - ETHERNET TCP/IP Programmable Fieldbus Controller

16-bit CPU

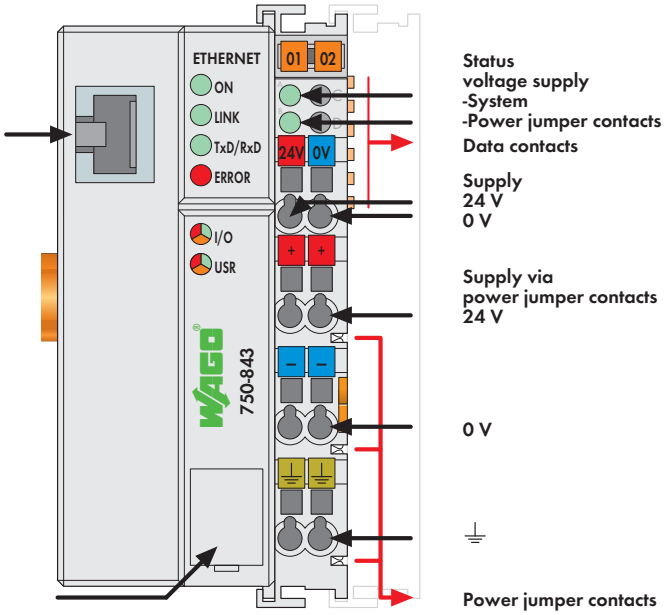

The ETHERNET PLC combines control functionality, I/O interface and ETHERNET in one device.

Programming of the application is done in accordance with IEC 61131-3. Function blocks allow both clients and servers to be programmed via socket APIs for all transport protocols (e.g., TCP, UDP).

Features and applications:

- Use of decentralized control can better support a PLC or PC
- Complex applications can be divided into individually testable units
- Programmable fault response in the event of a fieldbus failure
- Signal pre-processing reduces fieldbus transmissions
- Peripheral equipment can be controlled directly, resulting in faster system response times
- Stand-alone, compact controller

Description	Item No.	Pack. Unit
ETHERNET Controller 10 MBit	**750-843**	1

Accessories	Item No.	Pack. Unit
WAGO-I/O-PRO V2.3, RS-232 kit	**759-333**	1
Miniature WSB Quick marking system		
plain	**248-501**	5
with marking	see Section 11	

Approvals

Conformity marking	CE
Korea Certification	
Marine applications	ABS, BV, DNV, GL, KR, LR, NKK, PRS, RINA
UL 508	
ANSI/ISA 12.12.01	Class I, Div. 2, Grp. ABCD, T4
TÜV 07 ATEX 554086 X	I M2 Ex d I Mb, II 3 G Ex nA IIC T4 Gc, II 3 D Ex tc IIIC T135°C Dc
IECEx TUN 09.0001 X	Ex d I Mb, Ex nA IIC T4 Gc, Ex tc IIIC T135°C Dc

System Data

No. of controllers connected to Master	limited by ETHERNET specification
Transmission medium	Twisted Pair S-UTP 100 Ω cat. 5
Max. length of fieldbus segment	100 m between hub station and 750-843; max. length of network limited by ETHERNET specification
Baud rate	10 Mbit/s
Buscoupler connection	RJ-45
Protocols	MODBUS/TCP, HTTP, BootP, MODBUS/UDP
Programming	WAGO-I/O-PRO V2.3
IEC 61131-3	IL, LD, FBD (CFC), ST, FC

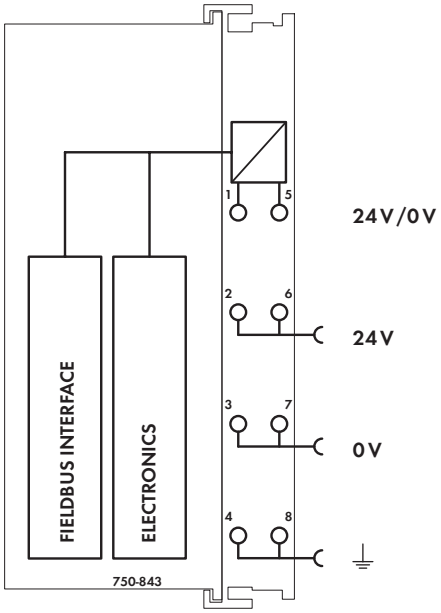

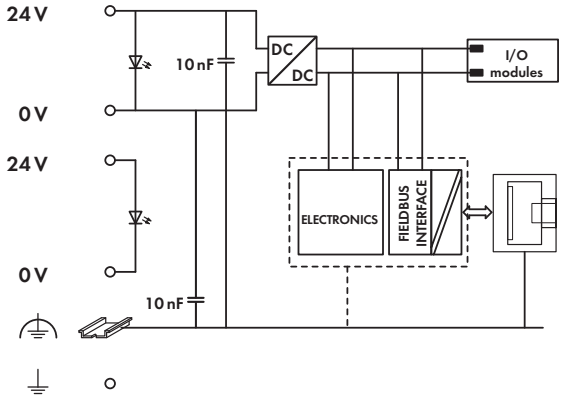

Technical Data

Number of I/O modules	64
Max. input process image	512 bytes
Max. output process image	512 bytes
Max. input variables	512 bytes
Max. output variables	512 bytes
Configuration	automatic
Program memory	64 Kbytes
Data memory	64 Kbytes
Non-volatile memory (retain)	8 Kbytes
Cycle time	< 3ms for 1,000 statements / 256 dig. I/Os
Power supply	24 V DC (-25 % ... +30 %)
Max. input current (24 V)	500 mA
Power supply efficiency	87 %
Internal current consumption (5 V)	200 mA
Total current for I/O modules (5 V)	1800 mA
Isolation	500V system/supply
Voltage via power jumper contacts	24 V DC (-25 % ... +30 %)
Current via power jumper contacts (max.)	10 A DC

General Specifications

Operating temperature	0 °C ... +55 °C
Wire connection	CAGE CLAMP®
Cross sections	0.08 mm² ... 2.5 mm² / AWG 28 ... 14
Strip lengths	8 ... 9 mm / 0.33 in
Dimensions (mm) W x H x L	51 x 65 x 100
	Height from upper-edge of DIN 35 rail
Weight	197 g
Storage temperature	-25 °C ... +85 °C
Relative air humidity (no condensation)	95 %
Vibration resistance	acc. to IEC 60068-2-6
Shock resistance	acc. to IEC 60068-2-27
Degree of protection	IP20
EMC immunity of interference	acc. to EN 61000-6-2, marine applications
EMC emission of interference	acc. to EN 61000-6-4, marine applications

PLC - ETHERNET TCP/IP Programmable Fieldbus Controller

16-bit CPU

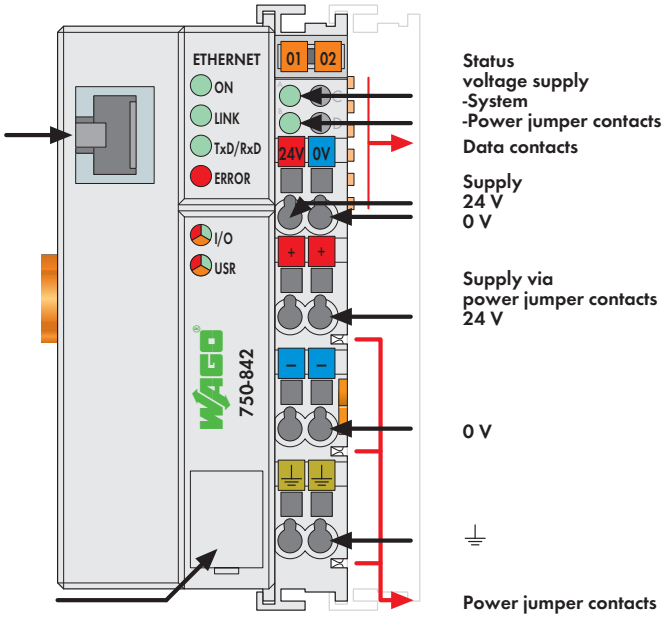

The ETHERNET PLC combines control functionality, I/O interface and ETHERNET in one device.

Programming PLC applications is performed in compliance with IEC 61131-3. Function blocks allow both clients and servers to be programmed via socket APIs for all transport protocols (e.g., TCP, UDP).

Features and applications:

- Use of decentralized control can better support a PLC or PC
- Complex applications can be divided into individually testable units
- Programmable fault response in the event of a fieldbus failure
- Signal pre-processing reduces fieldbus transmissions
- Peripheral equipment can be controlled directly, resulting in faster system response times
- Stand-alone, compact controller

Description	Item No.	Pack. Unit
ETHERNET Controller 10 MBit	**750-842**	1

Accessories	Item No.	Pack. Unit
WAGO-I/O-PRO V2.3, RS-232 kit	**759-333**	1
Miniature WSB Quick marking system		
plain	**248-501**	5
with marking	see Section 11	

Approvals

Conformity marking	CE
Korea Certification	
Marine applications	ABS, BV, DNV, GL, KR, LR, NKK, PRS, RINA
UL 508	
ANSI/ISA 12.12.01	Class I, Div. 2, Grp. ABCD, T4
TÜV 12.1297 X (Brazil)	Ex nA IIC T4 Gc
TÜV 07 ATEX 554086 X	I M2 Ex d I Mb, II 3 G Ex nA IIC T4 Gc, II 3 D Ex tc IIIC T135°C Dc
IECEx TUN 09.0001 X	Ex d I Mb, Ex nA IIC T4 Gc, Ex tc IIIC T135°C Dc

System Data

No. of controllers connected to Master	limited by ETHERNET specification
Transmission medium	Twisted Pair S-UTP 100 Ω cat. 5
Max. length of fieldbus segment	100 m between hub station and 750-842; max. length of network limited by ETHERNET specification
Baud rate	10 Mbit/s
Buscoupler connection	RJ-45
Protocols	MODBUS/TCP, HTTP, BootP, MODBUS/UDP
Programming	WAGO-I/O-PRO 32, from firmware version SW 15, also programmable with WAGO-I/O-PRO V2.3
IEC 61131-3	IL, LD, FBD (CFC), ST, FC

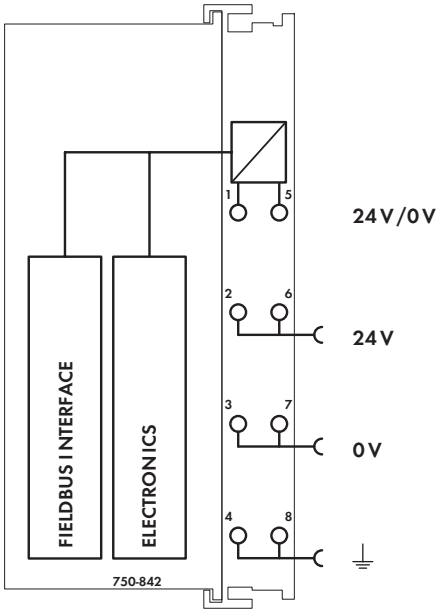

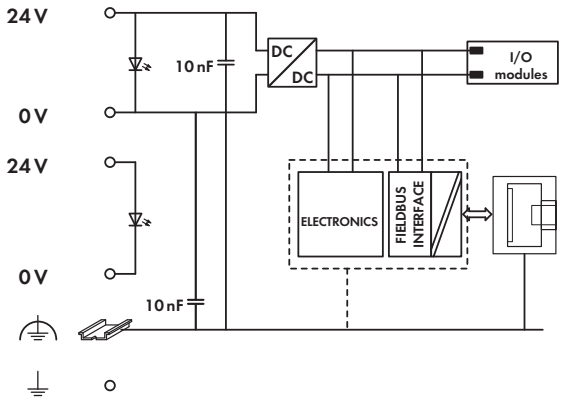

Technical Data

Number of I/O modules	64
Max. input process image	512 bytes
Max. output process image	512 bytes
Max. input variables	512 bytes
Max. output variables	512 bytes
Configuration	automatic
Program memory	128 Kbytes
Data memory	64 Kbytes
Non-volatile memory (retain)	8 Kbytes
Cycle time	< 3ms for 1,000 statements / 256 dig. I/Os
Power supply	24 V DC (-25 % ... +30 %)
Max. input current (24 V)	500 mA
Power supply efficiency	87 %
Internal current consumption (5 V)	200 mA
Total current for I/O modules (5 V)	1800 mA
Isolation	500V system/supply
Voltage via power jumper contacts	24 V DC (-25 % ... +30 %)
Current via power jumper contacts (max.)	10 A DC

General Specifications

Operating temperature	0 °C ... +55 °C
Wire connection	CAGE CLAMP®
Cross sections	0.08 mm² ... 2.5 mm² / AWG 28 ... 14
Strip lengths	8 ... 9 mm / 0.33 in
Dimensions (mm) W x H x L	51 x 65 x 100
	Height from upper-edge of DIN 35 rail
Weight	197 g
Storage temperature	-25 °C ... +85 °C
Relative air humidity (no condensation)	95 %
Vibration resistance	acc. to IEC 60068-2-6
Shock resistance	acc. to IEC 60068-2-27
Degree of protection	IP20
EMC immunity of interference	acc. to EN 61000-6-2, marine applications
EMC emission of interference	acc. to EN 61000-6-4, marine applications

PLC - DeviceNet Programmable Fieldbus Controller

16-bit CPU

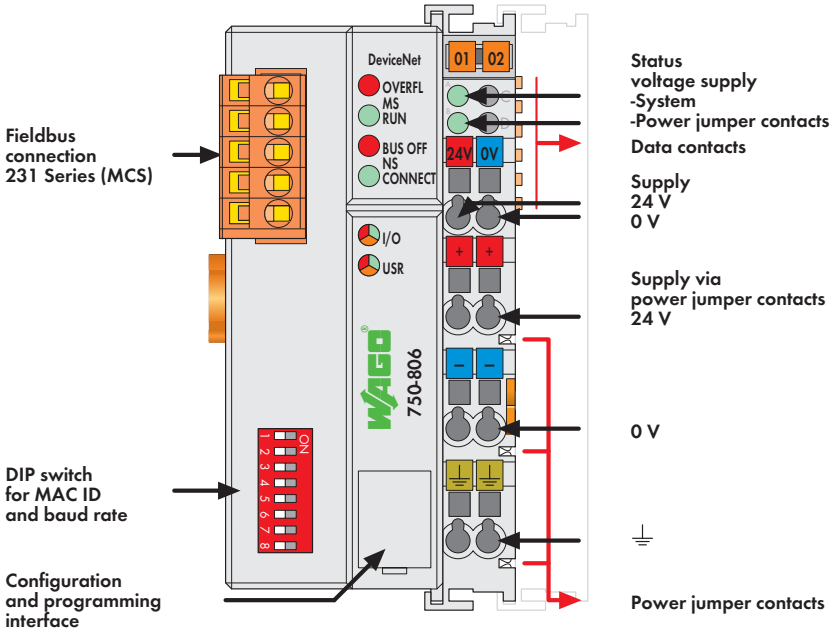

The DeviceNet PLC combines control functionality, I/O interface and fieldbus in one device.

Programming of the application is done in accordance with IEC 61131-3. The programmer can access all fieldbus and I/O data.

Features and applications:

- Use of decentralized control can better support a PLC or PC
- Complex applications can be divided into individually testable units
- Programmable fault response in the event of a fieldbus failure
- Signal pre-processing reduces fieldbus transmissions
- Peripheral equipment can be controlled directly, resulting in faster system response times
- Stand-alone, compact controller

Notice: EDS files required

Description	Item No.	Pack. Unit
Contr. DeviceNet	**750-806**	1

Accessories		Item No.	Pack. Unit
EDS files	Download: www.wago.com		
WAGO-I/O-PRO V2.3, RS-232 kit		**759-333**	1
Miniature WSB Quick marking system			
	plain	**248-501**	5
	with marking	see Section 11	

Approvals

Conformity marking	CE
Korea Certification	
Marine applications	ABS, BV, DNV, GL, KR, LR, NKK, PRS, RINA
UL 508	
ANSI/ISA 12.12.01	Class I, Div. 2, Grp. ABCD, T4
TÜV 12.1297 X (Brazil)	Ex nA IIC T4 Gc
TÜV 07 ATEX 554086 X	I M2 Ex d I Mb, II 3 G Ex nA IIC T4 Gc, II 3 D Ex tc IIIC T135°C Dc
IECEx TUN 09.0001 X	Ex d I Mb, Ex nA IIC T4 Gc, Ex tc IIIC T135°C Dc

System Data

No. of controllers connected to Master	64 with scanner
Max. no. of I/O points	approx. 6000 (depends on master)
Transmission medium	Shielded Cu cable Trunk line: 2 x 0.82 mm² + 2 x 1.7 mm² Drop line: 2 x 0.2 mm² + 2 x 0.32 mm²
Max. length of bus line	100 m ... 500 m (depends on baud rate/ cable)
Baud rate	125 Kbaud, 250 Kbaud, 500 Kbaud
Buscoupler connection	5-pole male connector, 231 Series (MCS), female connector 231-305/ 010-000/ 050-000 (included)
Programming	WAGO-I/O-PRO 32, from firmware version SW 08, also programmable with WAGO-I/O-PRO V2.3
IEC 61131-3	IL, LD, FBD (CFC), ST, FC

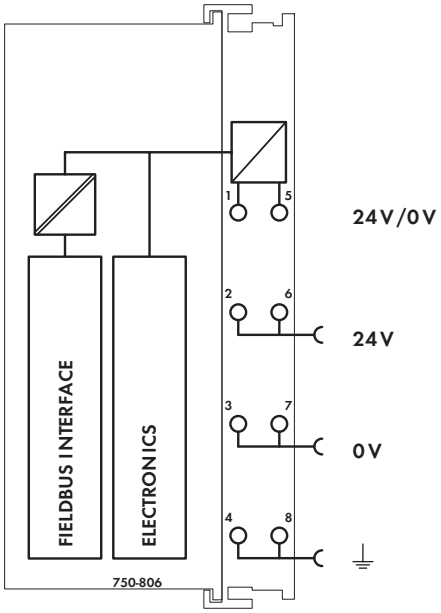

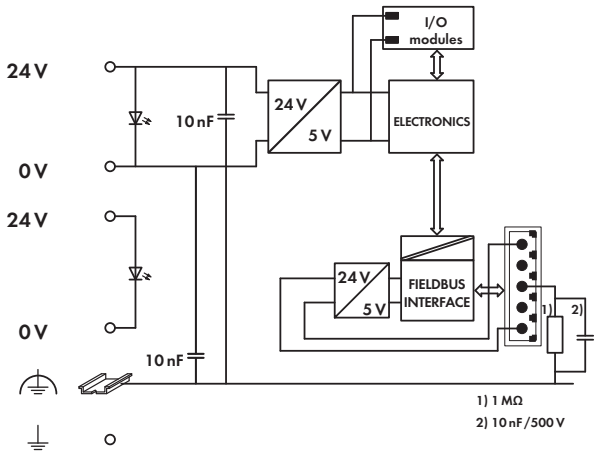

Technical Data

Number of I/O modules	64
Max. input process image	1024 bytes
Max. output process image	1024 bytes
Max. input variables	512 bytes
Max. output variables	512 bytes
Configuration	via PC or PLC
Program memory	128 Kbytes
Data memory	64 Kbytes
Non-volatile memory (retain)	8 Kbytes
Cycle time	< 3 ms for 1,000 statements /
	256 dig. I/Os
DeviceNet features	Polled I/O message connection
	Strobed I/O message connection
	Change of state
	Cyclic message connection
	UCMM
	DeviceNet master can be programmed
	using function blocks
Power supply	24 V DC (-25 % ... +30 %)
Current consumption	
via power supply terminal	< 500 mA / 24 V
via DeviceNet interface	< 120 mA / 11 V
Power supply efficiency	87 %
Internal current consumption (5 V)	350 mA
Total current for I/O modules (5 V)	1650 mA
Isolation	500V system/supply
Voltage via power jumper contacts	24 V DC (-25 % ... +30 %)
Current via power jumper contacts (max.)	10 A DC

General Specifications

Operating temperature	0 °C ... +55 °C
Wire connection	CAGE CLAMP®
Cross sections	0.08 mm² ... 2.5 mm² / AWG 28 ... 14
Strip lengths	8 ... 9 mm / 0.33 in
Dimensions (mm) W x H x L	51 x 65 x 100
	Height from upper-edge of DIN 35 rail
Weight	200 g
Storage temperature	-25 °C ... +85 °C
Relative air humidity (no condensation)	95 %
Vibration resistance	acc. to IEC 60068-2-6
Shock resistance	acc. to IEC 60068-2-27
Degree of protection	IP20
EMC immunity of interference	acc. to EN 61000-6-2, marine applications
EMC emission of interference	acc. to EN 61000-6-4, marine applications

PLC - MODBUS Programmable Fieldbus Controller

16-bit CPU

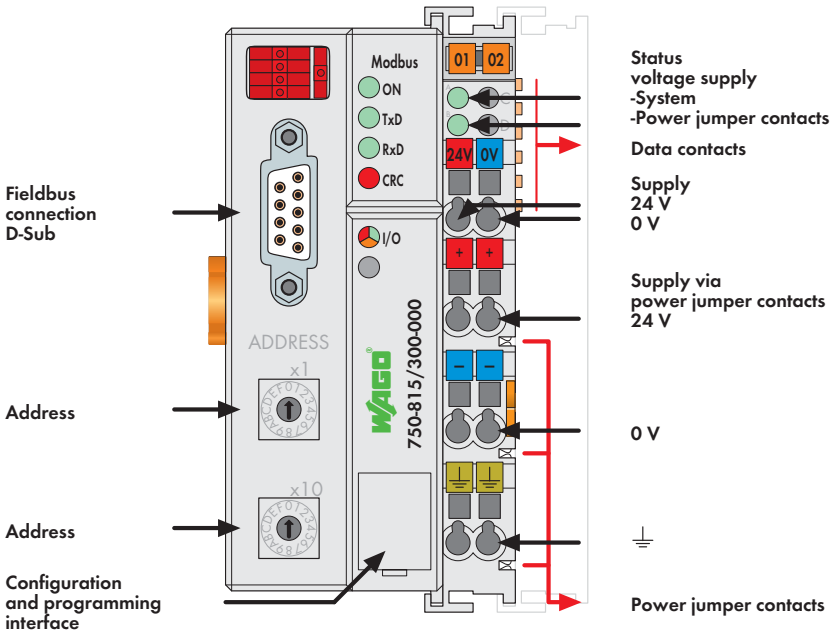

The MODBUS PLC is an extension of the WAGO-I/O-SYSTEM.

This controller combines a WAGO MODBUS fieldbus coupler with PLC functionality. Application PLC programming is IEC 61131-3 compliant. The programmer can access all fieldbus and I/O data.

Features and applications:

- Decentralized control to optimize support for a PLC or PC
- Devide complex applications into individually testable units
- Programmable fault response in the event of fieldbus failure
- Signal pre-processing to reduce fieldbus transmissions
- Directly control peripheral equipment for faster system response times
- Stand-alone, compact controller

Description	Item No.	Pack. Unit
Contr. MODBUS / RS-485 / 150 Bd ... 115.2 kBd	**750-815/300-000**	1
Contr. MODBUS / RS-485 / 150 Bd ... 115.2 kBd/T	**750-815/325-000**	1
Extended temperature range: -20 °C ... +60 °C		

Accessories	Item No.	Pack. Unit
WAGO-I/O-PRO V2.3, RS-232 kit	**759-333**	1
Miniature WSB Quick marking system		
plain	**248-501**	5
with marking	see Section 11	

Approvals

Conformity marking	CE
Marine applications (versions upon request)	BV, DNV, GL, KR, NKK, PRS, RINA
UL 508	
ANSI/ISA 12.12.01	Class I, Div. 2, Grp. ABCD, T4
TÜV 07 ATEX 554086 X	I M2 Ex d I Mb, II 3 G Ex nA IIC T4 Gc, II 3 D Ex tc IIIC T135°C Dc
IECEx TUN 09.0001 X	Ex d I Mb, Ex nA IIC T4 Gc, Ex tc IIIC T135°C Dc

System Data

No. of controllers connected to Master	247 with repeater
Max. no. of I/O points	approx. 6000 (depends on master)
Transmission medium	Shielded Cu cable 2 (4) x 0.25 mm²
Max. length of fieldbus segment	1200 m (depends on baud rate/cable)
Baud rate	150 baud ... 115.2 Kbaud
Buscoupler connection	1 x D-Sub 9; socket
Programming	WAGO-I/O-PRO V2.3
IEC 61131-3	IL, LD, FBD (CFC), ST, FC

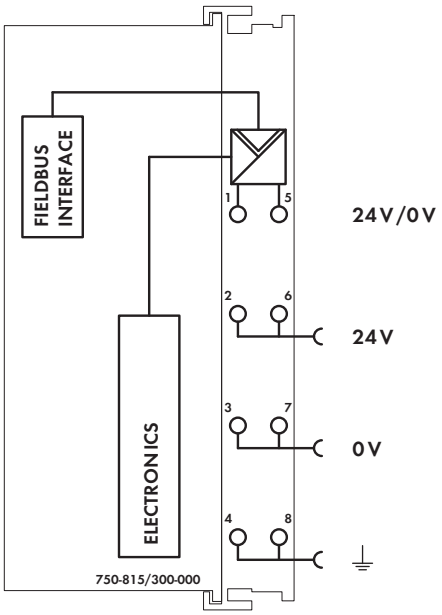

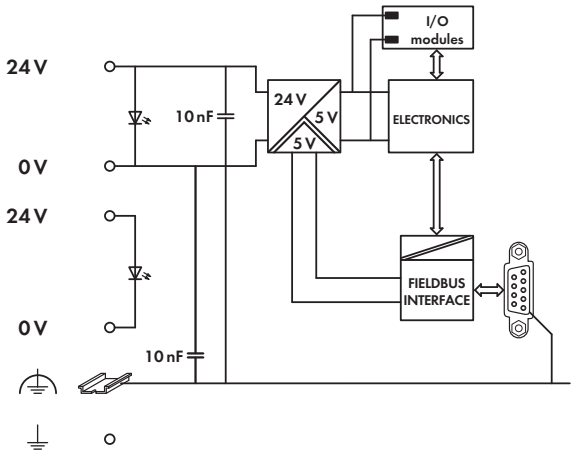

Technical Data

Number of I/O modules	64
Max. input process image	1024 bytes
Max. output process image	1024 bytes
Max. input variables	512 bytes
Max. output variables	512 bytes
Configuration	Via PC, function block or rotary encoder switch
Program memory	32 Kbytes
Data memory	32 Kbytes
Non-volatile memory (retain)	8 Kbytes
Cycle time	< 3 ms for 1,000 statements / 256 dig. I/Os
Power supply	24 V DC (-25 % ... +30 %)
Max. input current (24 V)	500 mA
Power supply efficiency	87 %
Internal current consumption (5 V)	350 mA
Total current for I/O modules (5 V)	1650 mA
Isolation	500 V system/supply
Voltage via power jumper contacts	24 V DC (-25 % ... +30 %)
Current via power jumper contacts (max.)	10 A DC

General Specifications

Operating temperature	0 °C ... +55 °C
Wire connection	CAGE CLAMP®
Cross sections	0.08 mm² ... 2.5 mm² / AWG 28 ... 14
Strip lengths	8 ... 9 mm / 0.33 in
Dimensions (mm) W x H x L	51 x 65 x 100
	Height from upper-edge of DIN 35 rail
Weight	215.6 g
Storage temperature	-25 °C ... +85 °C
Relative air humidity (no condensation)	95 %
Vibration resistance	acc. to IEC 60068-2-6
Shock resistance	acc. to IEC 60068-2-27
Degree of protection	IP20
EMC immunity of interference	acc. to EN 61000-6-2, marine applications
EMC emission of interference	acc. to EN 61000-6-4, marine applications

PLC - MODBUS Programmable Fieldbus Controller

16-bit CPU

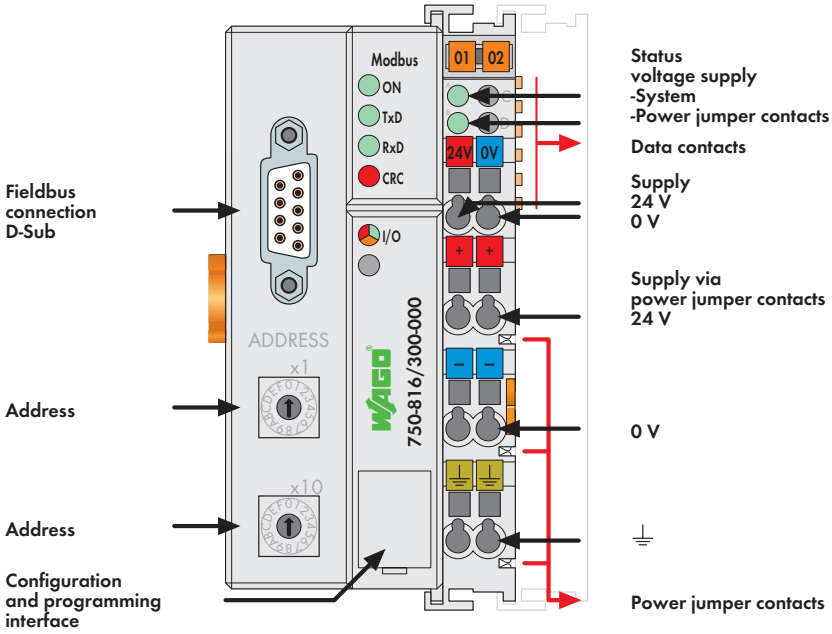

The MODBUS PLC is an extension of the WAGO-I/O-SYSTEM.

This controller combines a WAGO MODBUS fieldbus coupler with PLC functionality. Application PLC programming is IEC 61131-3 compliant. The programmer can access all fieldbus and I/O data.

Features and applications:

- Decentralized control to optimize support for a PLC or PC
- Devide complex applications into individually testable units
- Programmable fault response in the event of fieldbus failure
- Signal pre-processing to reduce fieldbus transmissions
- Directly control peripheral equipment for faster system response times
- Stand-alone, compact controller

Description	Item No.	Pack. Unit
Contr. MODBUS / RS-232 / 150 Bd ... 115.2 kBd	**750-816/300-000**	1

Accessories	Item No.	Pack. Unit
WAGO-I/O-PRO V2.3, RS-232 kit	**759-333**	1
Miniature WSB Quick marking system		
plain	**248-501**	5
with marking	see Section 11	

Approvals

Conformity marking	CE
Marine applications	BV, DNV, GL, KR, NKK, PRS, RINA
UL 508	
ANSI/ISA 12.12.01	Class I, Div. 2, Grp. ABCD, T4
TÜV 07 ATEX 554086 X	I M2 Ex d I Mb, II 3 G Ex nA IIC T4 Gc, II 3 D Ex tc IIIC T135°C Dc
IECEx TUN 09.0001 X	Ex d I Mb, Ex nA IIC T4 Gc, Ex tc IIIC T135°C Dc

System Data

No. of controllers connected to Master	247 with repeater
Max. no. of I/O points	approx. 6000 (depends on master)
Transmission medium	Shielded Cu cable 2 (4) x 0.25 mm²
Max. length of fieldbus segment	1200 m (depends on baud rate/cable)
Baud rate	150 baud ... 115.2 Kbaud
Buscoupler connection	1 x D-Sub 9; socket
Programming	WAGO-I/O-PRO V2.3
IEC 61131-3	IL, LD, FBD (CFC), ST, FC

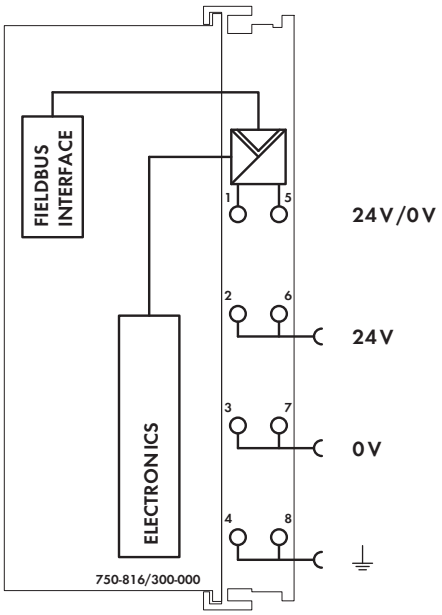

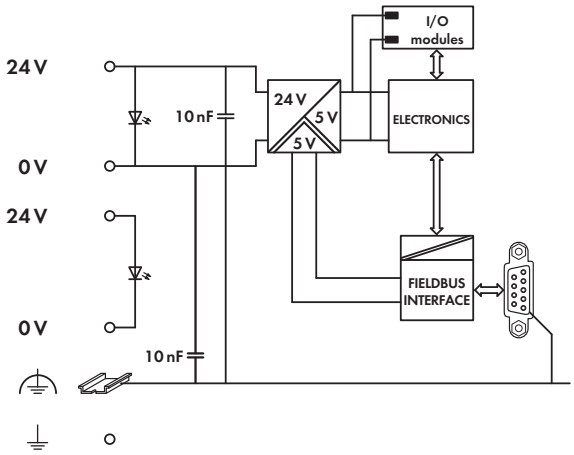

Technical Data

Number of I/O modules	64
Max. input process image	1024 bytes
Max. output process image	1024 bytes
Max. input variables	512 bytes
Max. output variables	512 bytes
Configuration	Via PC, function block or rotary encoder switch
Program memory	32 Kbytes
Data memory	32 Kbytes
Non-volatile memory (retain)	8 Kbytes
Cycle time	< 3 ms for 1,000 statements / 256 dig. I/Os
Power supply	24 V DC (-25 % ... +30 %)
Max. input current (24 V)	500 mA
Power supply efficiency	87 %
Internal current consumption (5 V)	350 mA
Total current for I/O modules (5 V)	1650 mA
Isolation	500 V system/supply
Voltage via power jumper contacts	24 V DC (-25 % ... +30 %)
Current via power jumper contacts (max.)	10 A DC

General Specifications

Operating temperature	0 °C ... +55 °C
Wire connection	CAGE CLAMP®
Cross sections	0.08 mm² ... 2.5 mm² / AWG 28 ... 14
Strip lengths	8 ... 9 mm / 0.33 in
Dimensions (mm) W x H x L	51 x 65 x 100
	Height from upper-edge of DIN 35 rail
Weight	215 g
Storage temperature	-25 °C ... +85 °C
Relative air humidity (no condensation)	95 %
Vibration resistance	acc. to IEC 60068-2-6
Shock resistance	acc. to IEC 60068-2-27
Degree of protection	IP20
EMC immunity of interference	acc. to EN 61000-6-2, marine applications
EMC emission of interference	acc. to EN 61000-6-4, marine applications

PLC - PROFIBUS DP/V1 Programmable Fieldbus Controller

16-bit CPU

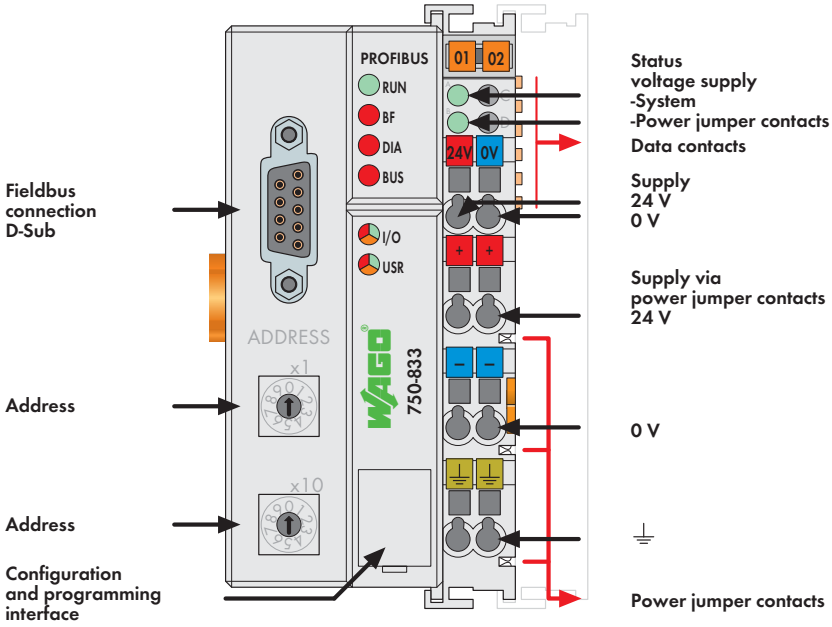

The PROFIBUS DP/V1 PLC combines control functionality, I/O interface and fieldbus in one device. Programming PLC applications is performed in compliance with IEC 61131-3. The programmer can access all fieldbus and I/O data.

Features and applications:

- Use of decentralized control can better support a PLC or PC
- Complex applications can be divided into individually testable units
- Programmable fault response in the event of a fieldbus failure
- Signal pre-processing reduces fieldbus transmissions
- Peripheral equipment can be controlled directly, resulting in faster system response times
- Stand-alone, compact controller

Notice: GSD files required

Description	Item No.	Pack. Unit
Contr. PROFIBUS DP/V1 12 MBd	**750-833**	1
Contr. PROFIBUS DP/V1 12 MBd/T	**750-833/025-000**	1
Extended temperature range: -20 °C ... +60 °C		

Accessories		Item No.	Pack. Unit
GSD files	Download: www.wago.com		
WAGO-I/O-PRO V2.3, RS-232 kit		**759-333**	1
Miniature WSB Quick marking system			
	plain	**248-501**	5
	with marking	see Section 11	

Standards and Approvals

Standard	EN 50170
Conformity marking	CE
Korea Certification	
Marine applications (versions upon request)	ABS, BV, DNV, GL, KR, LR, NKK, PRS, RINA
UL 508	
ANSI/ISA 12.12.01	Class I, Div. 2, Grp. ABCD, T4
TÜV 12.1297 X (Brazil)	Ex nA IIC T4 Gc
TÜV 07 ATEX 554086 X	I M2 Ex d I Mb, II 3 G Ex nA IIC T4 Gc, II 3 D Ex tc IIIC T135°C Dc
IECEx TUN 09.0001 X	Ex d I Mb, Ex nA IIC T4 Gc, Ex tc IIIC T135°C Dc

System Data

No. of controllers connected to Master	96 with repeater
Max. no. of I/O points	approx. 6000 (depends on master)
Transmission medium	Cu cable acc. to EN 50170
Max. length of fieldbus segment	100 m ... 1200 m (depends on baud rate/cable)
Baud rate	9.6 Kbaud ... 12 Mbaud
Transmission time	typ. 1 ms (10 controller; 32 digital I/Os per controller at 12 Mbaud) max. 3.3 ms
Buscoupler connection	1 x D-Sub 9; socket
Programming	WAGO-I/O-PRO 32, from firmware version SW 07, also programmable with WAGO- I/O-PRO V2.3
IEC 61131-3	IL, LD, FBD (CFC), ST, FC

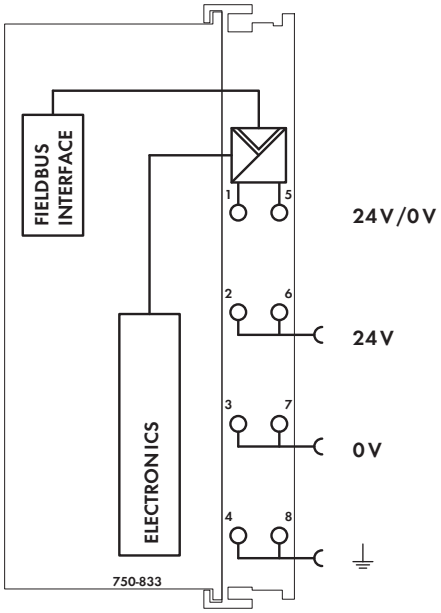

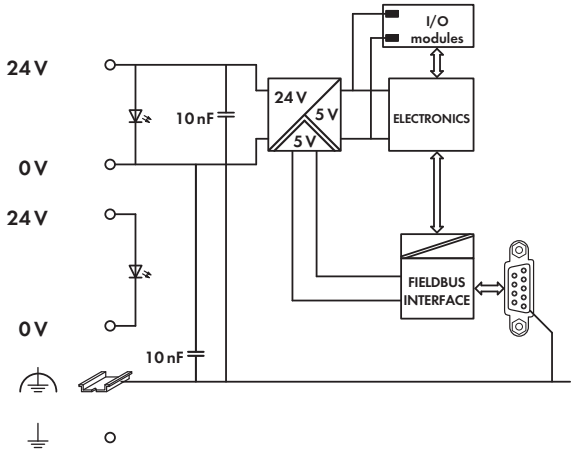

Technical Data

Number of I/O modules	63
Max. input process image	244 bytes
Max. output process image	244 bytes
Max. input variables	244 bytes
Max. output variables	244 bytes
Configuration	automatic
Program memory	128 Kbytes
Data memory	64 Kbytes
Non-volatile memory (retain)	8 Kbytes
Cycle time	< 3 ms for 1,000 statements / 256 dig. I/Os
Power supply	24 V DC (-25 % ... +30 %)
Max. input current (24 V)	500 mA
Power supply efficiency	87 %
Internal current consumption (5 V)	200 mA
Total current for I/O modules (5 V)	1800 mA
Isolation	500V system/supply
Voltage via power jumper contacts	24 V DC (-25 % ... +30 %)
Current via power jumper contacts (max.)	10 A DC

General Specifications

Operating temperature	0 °C ... +55 °C
Wire connection	CAGE CLAMP®
Cross sections	0.08 mm² ... 2.5 mm² / AWG 28 ... 14
Strip lengths	8 ... 9 mm / 0.33 in
Dimensions (mm) W x H x L	51 x 65 x 100
	Height from upper-edge of DIN 35 rail
Weight	184 g
Storage temperature	-25 °C ... +85 °C
Relative air humidity (no condensation)	95 %
Vibration resistance	acc. to IEC 60068-2-6
Shock resistance	acc. to IEC 60068-2-27
Degree of protection	IP20
EMC immunity of interference	acc. to EN 61000-6-2, marine applications
EMC emission of interference	acc. to EN 61000-6-4, marine applications

PLC - CANopen Programmable Fieldbus Controller, MCS

16-bit CPU

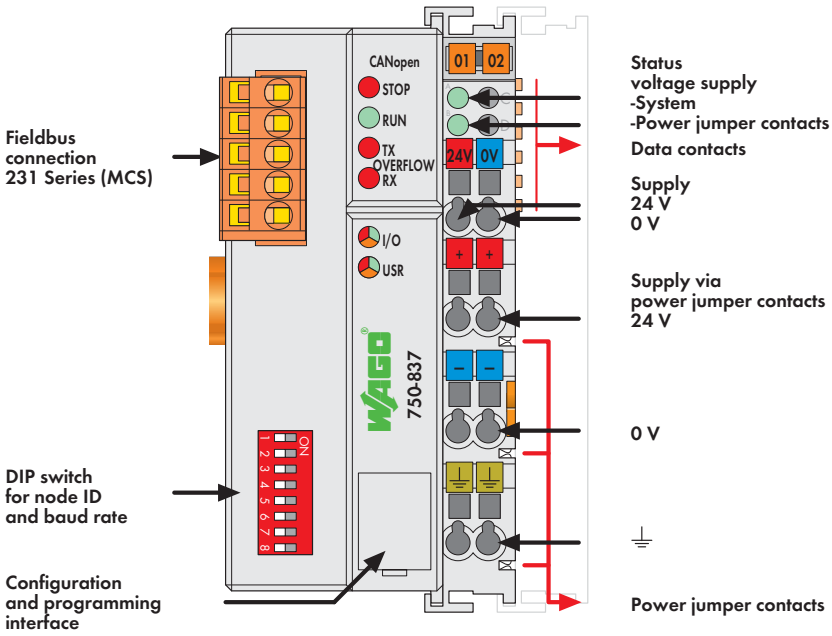

The CANopen PLC combines control functionality, I/O interface and fieldbus in one device.

Programming of the application is done in accordance with IEC 61131-3. The programmer can access all fieldbus and I/O data.

Features and applications:

- Use of decentralized control can better support a PLC or PC
- Complex applications can be divided into individually testable units
- Programmable fault response in the event of a fieldbus failure
- Signal pre-processing reduces fieldbus transmissions
- Peripheral equipment can be controlled directly, resulting in faster system response times
- Stand-alone, compact controller

Notice: EDS files required

Description		Item No.	Pack. Unit
CANopen Controller MCS		**750-837**	1
CANopen Controller MCS		**750-837/020-000**	1
Program memory 256 Kbytes;			
Data memory 192 Kbytes			
CANopen Controller MCS		**750-837/021-000**	1
Program memory 640 Kbytes;			
Data memory 832 Kbytes			

Accessories		Item No.	Pack. Unit
EDS files	Download: www.wago.com		
WAGO-I/O-PRO V2.3, RS-232 kit		**759-333**	1
Miniature WSB Quick marking system			
	plain	**248-501**	5
	with marking	see Section 11	

Approvals

Conformity marking	CE
Korea Certification	
Marine applications (versions upon request)	ABS, BV, DNV, GL, KR, LR, NKK, PRS, RINA
UL 508	
ANSI/ISA 12.12.01	Class I, Div. 2, Grp. ABCD, T4
TÜV 12.1297 X (Brazil)	Ex nA IIC T4 Gc
TÜV 07 ATEX 554086 X	I M2 Ex d I Mb, II 3 G Ex nA IIC T4 Gc, II 3 D Ex tc IIIC T135°C Dc
IECEx TUN 09.0001 X	Ex d I Mb, Ex nA IIC T4 Gc, Ex tc IIIC T135°C Dc

System Data

No. of controllers connected to Master	110
Transmission medium	Shielded Cu cable 3 x 0.25 mm²
Max. length of bus line	30 m ... 1000 m (depends on baud rate/cable)
Baud rate	10 Kbaud ... 1 Mbaud
Buscoupler connection	5-pole male connector, 231 Series (MCS), female connector 231-305/ 010-000 (included)
Programming	WAGO-I/O-PRO 32, from firmware version SW 11, also programmable with WAGO- I/O-PRO V2.3
IEC 61131-3	IL, LD, FBD (CFC), ST, FC

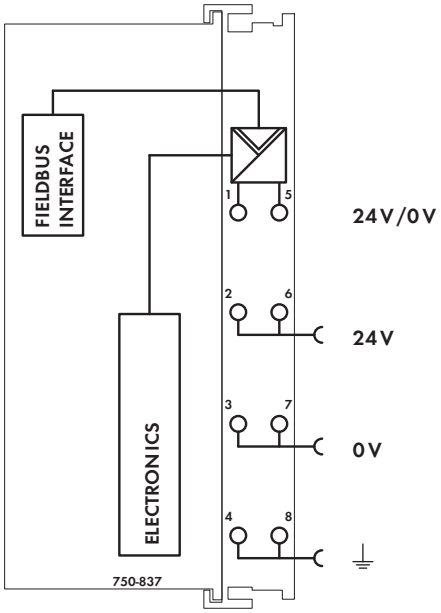

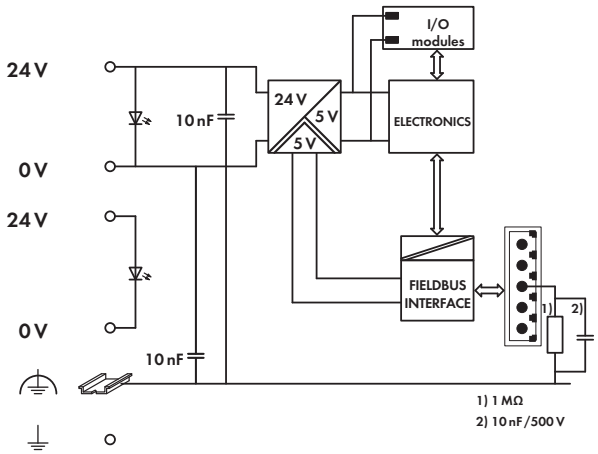

Technical Data

Number of I/O modules	64
Max. input process image	512 bytes
Max. output process image	512 bytes
Max. input variables	512 bytes
Max. output variables	512 bytes
Configuration	automatic
Program memory	128 Kbytes
Data memory	64 Kbytes
Non-volatile memory (retain)	8 Kbytes
Cycle time	< 3 ms for 1,000 statements /
	256 dig. I/Os
No. of PDOs	32 Tx / 32 Rx
No. of SDOs	2 server SDOs / 16 client SDOs
Communication profile	DS-301 V4.01
Device profile	DS-401 V 2.0
	Marginal check
	Edge-triggered PDOs
	Programmable error response
	DSP 405
	using function blocks NMT master can be
	programmed
COB ID distribution	SDO, standard
Node ID distribution	DIP switches
Other CANopen features	NMT slave
	Minimum boot-up
	Variable PDO mapping
	Emergency message
	Life guarding / heartbeat
	Configuration of virtual modules
Power supply	24 V DC (-25 % ... +30 %)
Max. input current (24 V)	500 mA
Power supply efficiency	87 %
Internal current consumption (5 V)	350 mA
Total current for I/O modules (5 V)	1650 mA
Isolation	500V system/supply
Voltage via power jumper contacts	24 V DC (-25 % ... +30 %)
Current via power jumper contacts (max.)	10 A DC

General Specifications

Operating temperature	0 °C ... +55 °C
Wire connection	CAGE CLAMP®
Cross sections	0.08 mm² ... 2.5 mm² / AWG 28 ... 14
Strip lengths	8 ... 9 mm / 0.33 in
Dimensions (mm) W x H x L	51 x 65 x 100
	Height from upper-edge of DIN 35 rail
Weight	200 g
Storage temperature	-25 °C ... +85 °C
Relative air humidity (no condensation)	95 %
Vibration resistance	acc. to IEC 60068-2-6
Shock resistance	acc. to IEC 60068-2-27
Degree of protection	IP20
EMC immunity of interference	acc. to EN 61000-6-2, marine applications
EMC emission of interference	acc. to EN 61000-6-4, marine applications

PLC - CANopen Programmable Fieldbus Controller, D-Sub

16-bit CPU

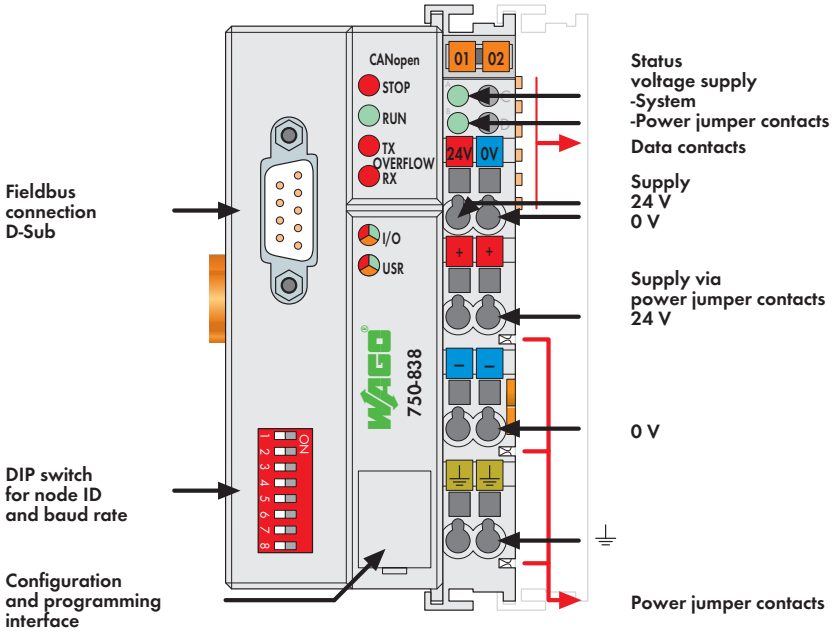

The CANopen PLC combines control functionality, I/O interface and fieldbus in one device.

The application program can be created based on IEC 61131-3. The programmer can access all fieldbus and I/O data.

Features and applications:

- Use of decentralized control can better support a PLC or PC
- Complex applications can be divided into individually testable units
- Programmable fault response in the event of a fieldbus failure
- Signal pre-processing reduces fieldbus transmissions
- Peripheral equipment can be controlled directly, resulting in faster system response times
- Compact, self-sufficient controller

Notice: EDS files required

Description	Item No.	Pack. Unit
Contr. CANopen D-Sub	**750-838**	1
Contr. CANopen D-Sub	**750-838/020-000**	1
Program memory 256 Kbytes;		
Data memory 192 Kbytes		
Contr. CANopen D-Sub	**750-838/021-000**	1
Program memory 640 Kbytes;		
Data memory 832 Kbytes		

Accessories		Item No.	Pack. Unit
EDS files	Download: www.wago.com		
WAGO-I/O-PRO V2.3, RS-232 kit		**759-333**	1
Miniature WSB Quick marking system			
	plain	**248-501**	5
	with marking	see Section 11	

Approvals

Conformity marking	CE
Korea Certification	
Marine applications (versions upon request)	BV, GL, LR, NKK, PRS, RINA
UL 508	
ANSI/ISA 12.12.01	Class I, Div. 2, Grp. ABCD, T4
TÜV 07 ATEX 554086 X	I M2 Ex d I Mb, II 3 G Ex nA IIC T4 Gc, II 3 D Ex tc IIIC T135°C Dc
IECEx TUN 09.0001 X	Ex d I Mb, Ex nA IIC T4 Gc, Ex tc IIIC T135°C Dc

System Data

No. of controllers connected to Master	110
Transmission medium	Shielded Cu cable 3 x 0.25 mm²
Max. length of bus line	30 m ... 1000 m (depends on baud rate/ cable)
Baud rate	10 Kbaud ... 1 Mbaud
Buscoupler connection	1 x D-Sub 9; plug
Programming	WAGO-I/O-PRO V2.3
IEC 61131-3	IL, LD, FBD (CFC), ST, FC

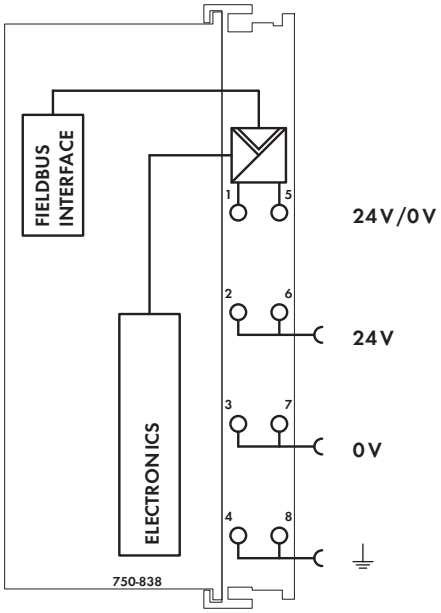

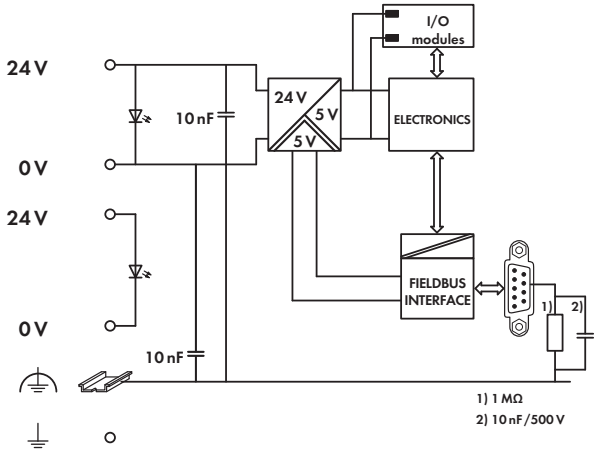

Technical Data

Number of I/O modules	64
Max. input process image	512 bytes
Max. output process image	512 bytes
Max. input variables	512 bytes
Max. output variables	512 bytes
Configuration	via PC or PLC
Program memory	128 Kbytes
Data memory	64 Kbytes
Non-volatile memory (retain)	8 Kbytes
Cycle time	< 3 ms for 1,000 statements /
	256 dig. I/Os
No. of PDOs	32 Tx / 32 Rx
No. of SDOs	2 server SDOs / 16 client SDOs
Communication profile	DS-301 V4.01
Device profile	DS-401 V 2.0
	Marginal check
	Edge-triggered PDOs
	Programmable error response
	DSP 405
	using function blocks NMT master can be
	programmed
COB ID distribution	SDO, standard
Node ID distribution	DIP switches
Other CANopen features	NMT slave
	Minimum boot-up
	Variable PDO mapping
	Emergency message
	Life guarding / heartbeat
	Configuration of virtual modules
Power supply	24 V DC (-25 % ... +30 %)
Max. input current (24 V)	500 mA
Power supply efficiency	87 %
Internal current consumption (5 V)	350 mA
Total current for I/O modules (5 V)	1650 mA
Isolation	500V system/supply
Voltage via power jumper contacts	24 V DC (-25 % ... +30 %)
Current via power jumper contacts (max.)	10 A DC

General Specifications

Operating temperature	0 °C ... +55 °C
Wire connection	CAGE CLAMP®
Cross sections	0.08 mm² ... 2.5 mm² / AWG 28 ... 14
Strip lengths	8 ... 9 mm / 0.33 in
Dimensions (mm) W x H x L	51 x 65 x 100
	Height from upper-edge of DIN 35 rail
Weight	181.7 g
Storage temperature	-25 °C ... +85 °C
Relative air humidity (no condensation)	95 %
Vibration resistance	acc. to IEC 60068-2-6
Shock resistance	acc. to IEC 60068-2-27
Degree of protection	IP20
EMC immunity of interference	acc. to EN 61000-6-2, marine applications
EMC emission of interference	acc. to EN 61000-6-4, marine applications

PLC - INTERBUS Programmable Fieldbus Controller

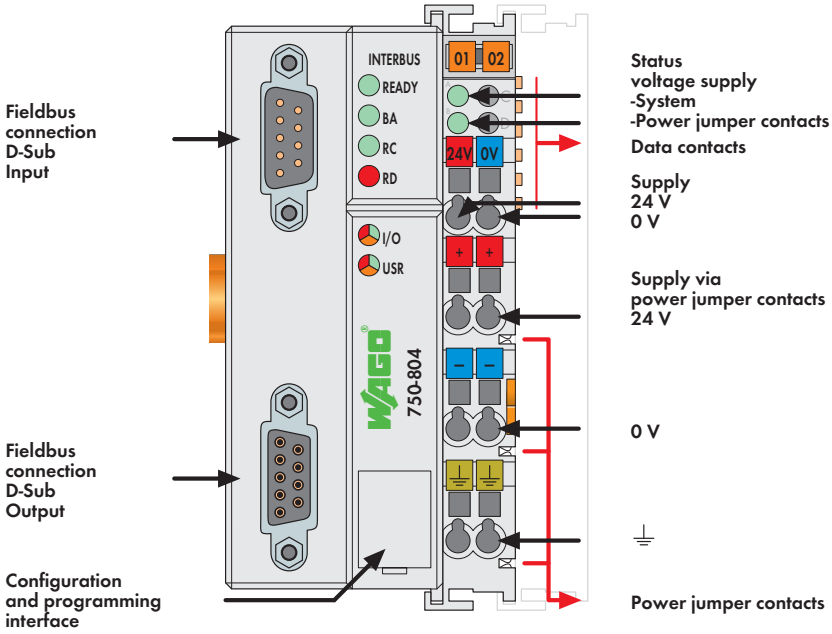

The INTERBUS PLC is an expansion for the WAGO-I/O-SYSTEM.

This controller combines the WAGO fieldbus coupler for INTERBUS with the functionality of a PLC. Programming of the application is done in accordance with IEC 61131-3. The programmer can access all fieldbus and I/O data.

Features and applications:
- Use of decentralized control can better support a PLC or PC
- Complex applications can be divided into individually testable units
- Programmable fault response in the event of a fieldbus failure
- Signal pre-processing reduces fieldbus transmissions
- Peripheral equipment can be controlled directly, resulting in faster system response times
- Stand-alone, compact controller

Description	Item No.	Pack. Unit
Contr. INTERBUS	**750-804**	1

Accessories	Item No.	Pack. Unit
INTERBUS files	Download: www.wago.com	
Miniature WSB Quick marking system		
plain	**248-501**	5
with marking	see Section 11	

Standards and Approvals

Standard	EN 50254
Conformity marking	CE
Korea Certification	
UL 508	
ANSI/ISA 12.12.01	Class I, Div. 2, Grp. ABCD, T4
TÜV 12.1297 X (Brazil)	Ex nA IIC T4 Gc
TÜV 07 ATEX 554086 X	I M2 Ex d I Mb, II 3 G Ex nA IIC T4 Gc, II 3 D Ex tc IIIC T135°C Dc
IECEx TUN 09.0001 X	Ex d I Mb, Ex nA IIC T4 Gc, Ex tc IIIC T135°C Dc

System Data

No. of controllers connected to Master	256
Max. no. of I/O points	4096 (depends on master)
Transmission medium	Certified Cu cable
Max. length of fieldbus segment	400 m
Baud rate	500 Kbaud
Transmission time	typ. 1.43 ms (10 couplers; 32 digital I/Os per coupler)
Buscoupler connection	1 x D-Sub 9; plug for input interface 1 x D-Sub 9; socket for output interface
Programming	WAGO-I/O-PRO 32
IEC 61131-3	IL, LD, FBD (CFC), ST, FC

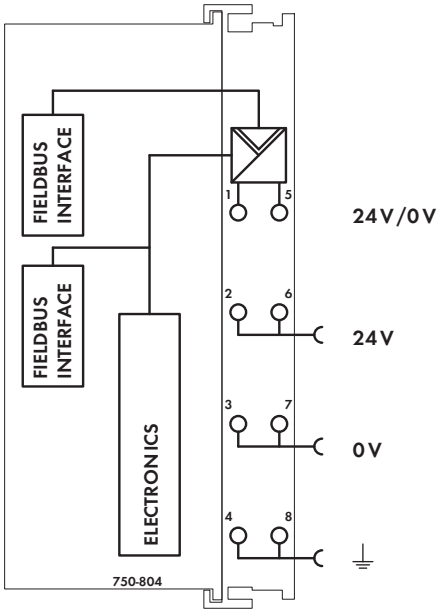

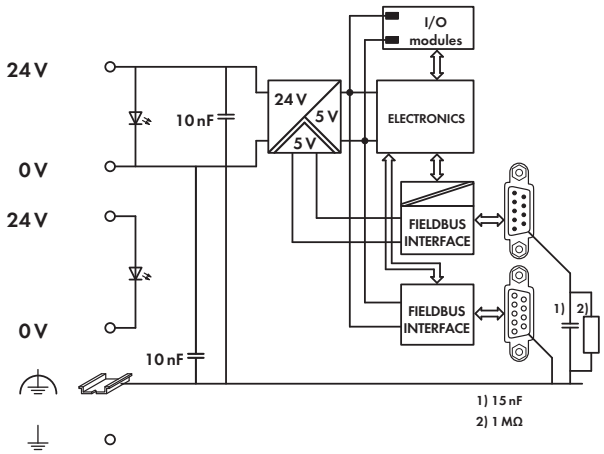

Technical Data

Number of I/O modules	64
Max. input process image	64 bytes
Max. output process image	64 bytes
Max. input variables	64 bytes
Max. output variables	64 bytes
Configuration	automatic
Program memory	128 Kbytes
Data memory	64 Kbytes
Non-volatile memory (retain)	8 Kbytes
Cycle time	< 3 ms for 1,000 statements / 256 dig. I/Os
Power supply	24 VDC (-25 % ... +30 %)
Max. input current (24 V)	500 mA
Power supply efficiency	87 %
Internal current consumption (5 V)	400 mA
Total current for I/O modules (5 V)	1600 mA
Isolation	500 V system/supply
Voltage via power jumper contacts	24 VDC (-25 % ... +30 %)
Current via power jumper contacts (max.)	10 A DC

General Specifications

Operating temperature	0 °C ... +55 °C
Wire connection	CAGE CLAMP®
Cross sections	0.08 mm² ... 2.5 mm² / AWG 28 ... 14
Strip lengths	8 ... 9 mm / 0.33 in
Dimensions (mm) W x H x L	51 x 65 x 100
	Height from upper-edge of DIN 35 rail
Weight	200 g
Storage temperature	-25 °C ... +85 °C
Relative air humidity (no condensation)	95 %
Vibration resistance	acc. to IEC 60068-2-6
Shock resistance	acc. to IEC 60068-2-27
Degree of protection	IP20
EMC immunity of interference	acc. to EN 61000-6-2
EMC emission of interference	acc. to EN 61000-6-4

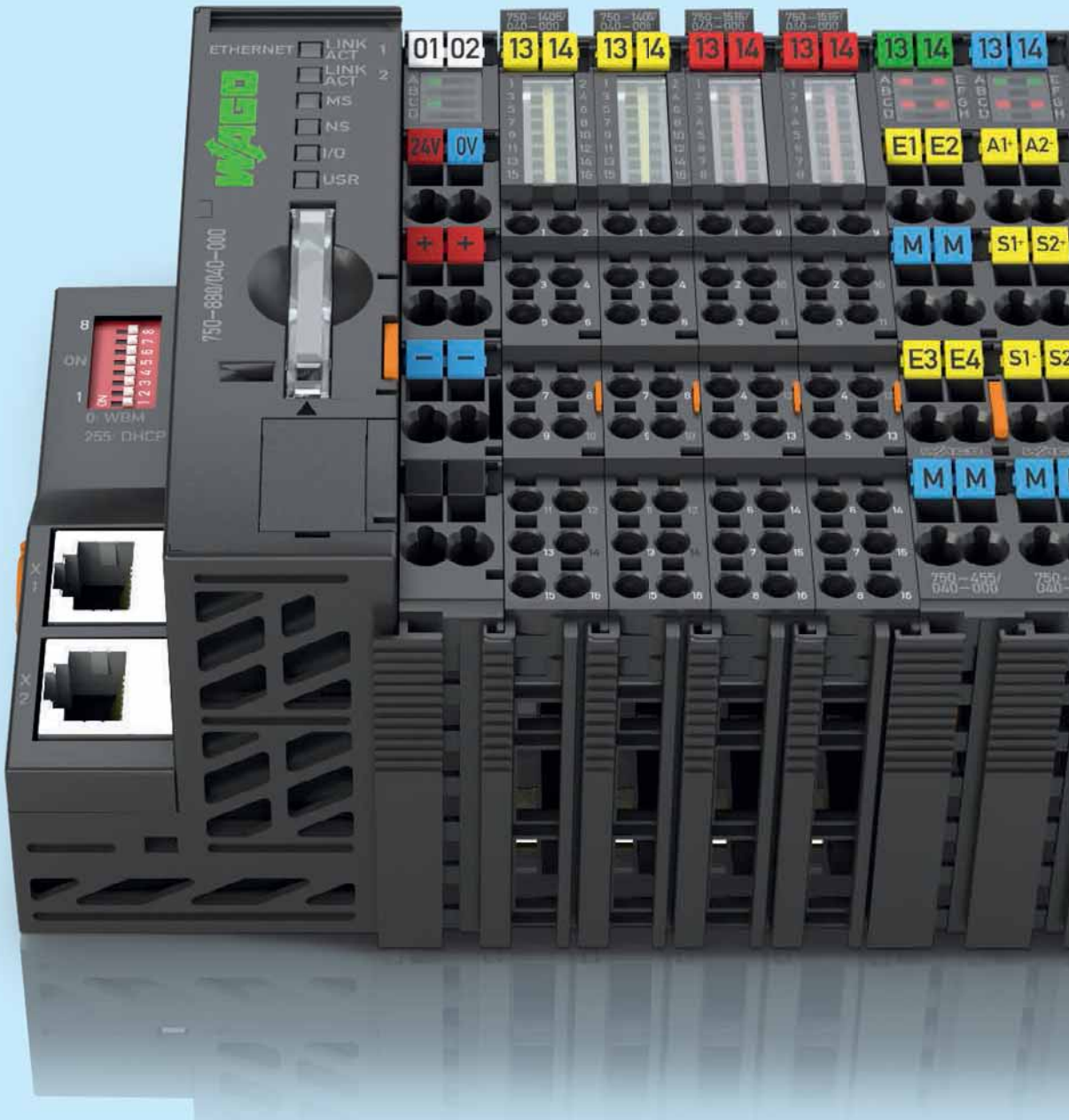

Programmable Fieldbus Controller XTR

◀◀◀ Section 2

PERSPECTO® Control Panels

- Merging control and visualization
- 8.9 cm ... 38.1 cm (3.5″ ... 15″)

◀◀ Section 3.1

PFC200

- Maximum performance in a minimum space
- High processing speed
- Additional operating controls (e.g., start/stop switch)
- Based on Linux® also in high-level language

◀ Section 3.2

Programmable Fieldbus Controllers

- Decentralized intelligence based on fieldbus couplers
- Programmable to IEC 61131-3
- WAGO-I/O-SYSTEM 750, modular

Programmable Fieldbus Controller XTR

For demanding applications where the following are critical:

- Extreme temperature stability
- Immunity to interference and impulse-voltage withstand
- Vibration and shock resistance

	Page
General Product Information	108
Interfaces and Configurations	109
Item Number Keys	109
Installation Instructions	110
Standards and Rated Conditions	111

	CPU	ETHERNET		PROFIBUS	CANopen	Others	Description	Item No.	
		MODBUS TCP	EtherNet/IP						
	32-bit	x	x				ETHERNET Controller/XTR	750-880/040-000	112
	32-bit	x	x			IEC 60870-5 IEC 61850 IEC 61400-25	ETHERNET Telecontroller/XTR	750-880/040-001	112
	32-bit				M/S		CANopen Controller/XTR	750-838/040-000	114

M: Master, S: Slave

Programmable Fieldbus Controller XTR
General Product Information

Programmable Fieldbus Controller XTR:
Taking it to the eXTReme —
The standard for 750 XTR

Programmable XTR fieldbus controllers are easily recognized by their dark gray housings. The WAGO-I/O-SYSTEM 750 XTR's unique features make it ideal for extreme environment applications.

The WAGO-I/O-SYSTEM 750 XTR is extremely weather-resistant, immune to electromagnetic interference, as well as insensitive to vibrations and impulse voltages. This is what makes 750 XTR the first choice for demanding applications including:

- Marine systems and onshore/offshore installations
- Renewable energy systems (wind turbines, solar systems and biogas plants)
- Transformer stations and power distribution systems
- Petrochemical manufacturing systems
- Water and wastewater treatment systems
- Custom machines
- Railway applications

Marine Systems and Onshore/Offshore Industry
International approvals coupled with industry-specific features permit use in shipbuilding and other harsh sectors. Meeting stringent criteria permits operation on marine diesels and in the EMC-sensitive area of a vessel's bridge. Because WAGO meets the marine industry's significantly greater requirements for immunity to interference or emission of interference and mechanical performance, WAGO I/O is well-suited to other industries.

Telecontrol technology
Standardized telecontrol protocols according to IEC 60870-5, IEC 61850 and IEC 61400-25 permit the use of programmable fieldbus controllers in telecontrol technology. In addition, increased requirements for dielectric strength according to EN 60870-2-1 are met.
The result is a tailor-made solution for demanding telecontrol applications that exceeds all requirements.

Link between Process Data and IT Application — Even under eXTReme Conditions
The controllers ideally combine real-time requirements with IT functionality. They support both MODBUS/TCP and ETHERNET/IP for use in industrial environments. HTTP, SNTP, SNMP, FTP, BootP, DHCP, DNS and other protocols simplify integration into IT environments. Integrated Web pages and Web-based visualization provide IT applications with real-time process data. Furthermore, the PLC incorporates library functions for email, SOAP, ASP, IP configuration, ETHERNET sockets and file system.

Modular Expandability
With the WAGO-I/O-SYSTEM 750 XTR, the programmable fieldbus controllers can be expanded to almost any input/output interface. Using the same standard platform has given the XTR the same proven advantages.

Worldwide Approvals
International approvals for industrial automation, building automation, shipbuilding and onshore/offshore applications guarantee worldwide use even under harsh operating conditions, e.g., Germanischer Lloyd, Det Norske Veritas, American Bureau of Shipping, Korean Register of Shipping, Nippon Kaiji Kyokai, Registro Italiano Navale and Polski Rejestr Stratkow.

Superior reliability in extreme climates
Regardless of freezing cold, extreme heat and high humidity, the WAGO-I/O-SYSTEM 750 XTR is engineered for absolute dependability in all climatic conditions. The XTR version of the programmable fieldbus coupler is unfazed by both freezing cold down to -40 °C and scorching heat up to +70 °C. And this applies to both initial start-up and daily operation. Another highlight is that the XTR functions at elevations up to 5,000 m, opening up these applications to new highs for safety, reliability and performance – even in the thin air of a mountain top station.

Additional protection against interference pulses
The WAGO-I/O-SYSTEM 750 XTR provides greater isolation up to 5 kV of impulse voltage, lower EMC emission of interference and higher insensitivity against EMC interference. These strengths add up to trouble-free operation.

High Mechanical Performance
Automation systems must be particularly vibration-resistant, especially when installed close to vibration-prone and shock-generating system components. Powerful motors and power circuit breakers are just two examples of common disturbance-creating components. The WAGO-I/O-SYSTEM 750 XTR
continues to set new standards here. Count on long-lasting, trouble-free operation and industry-topping levels of safety – even in the most torturous applications, such as tunnel boring machines.

- Controllers for eXTReme conditions
  - No air conditioning required
  - Can be used in unshielded areas
  - Install close to vibrating and shock-generating system components
- Extensive IT integration opportunities
- Expandable with the WAGO-I/O-SYSTEM 750 XTR's extensive portfolio
- Maintenance-free
- CAGE CLAMP® spring connection technology for vibration-proof, fast and maintenance-free connections

Programmable Fieldbus Controller XTR
Interfaces and Configurations

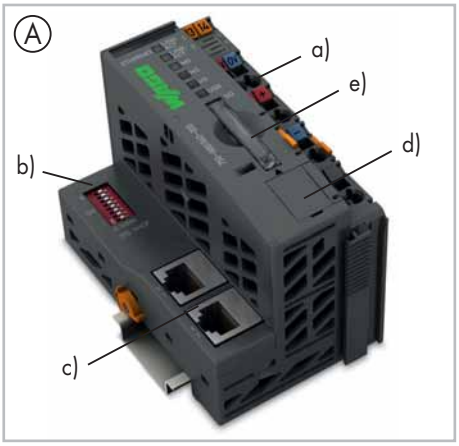

- Includes supply module (a)
- Technical differences on the connection level. Address switch (b) and fieldbus interface (c)
- Service port (d)

Housing design (A)
- SD card slot for external storage media (e)
- W x H* x L (mm) 62 x 65 x 100

Housing design (B)
- W x H* x L (mm) 51 x 65 x 100

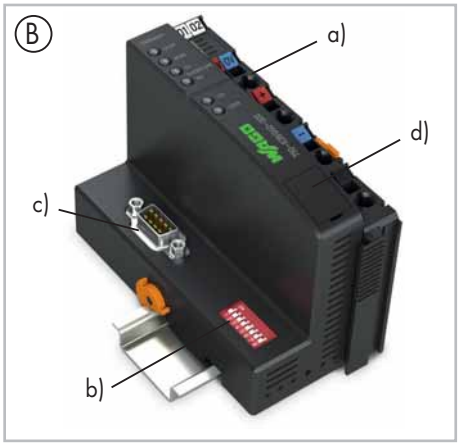

*Height from upper edge of the DIN-rail

Item Number Keys

Explanation of the components for the item number key

Item No. : 750-8xx/040-00y

3x: 16-bit	CANopen
8x: 32-bit multitasking	ETHERNET
001:	Telecontrol

Power Supply

Power is always channeled to the internal electronics power supply by the fieldbus coupler. The power supply to the field-side supply is electrically isolated. The division enables a separate supply for sensors and actuators. The I/O modules' connections automatically lead to transferring the supply voltages. Supply modules with diagnostics enable additional power supply monitoring. This ensures a flexible, user-specific supply design for a station.

The current supply to the electronics is limited by a maximum value. This value is dependent on the coupler used. If the sum of the internal current demand of all the I/O modules should exceed this value, an additional bus supply module is necessary. Even in this case, power supply to the field-side supply of 10 A may not be exceeded. However, different power supply modules allow a new power supply, formation of potential groups and the implementation of emergency stops.

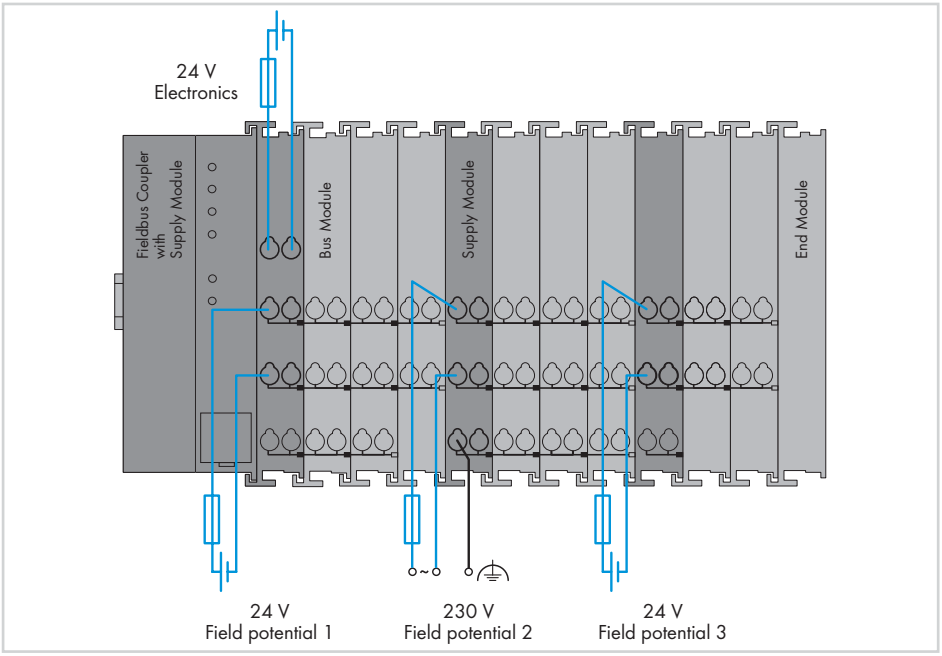

Notes

Additional steps must be implemented based on where the I/O-System is installed:

- Specific power and field-side power supply filters (750-624/040-001 or 750-626/040-000) are required for **marine** and onshore/offshore applications, as well as in telecontrol applications.

Please refer to the manual for details about the power supply's design.

Mixed Operation

Mixed operation (standard/XTR modules) within a node is possible when groups of modules are electrically isolated on the field side (i.e., electrically isolated power supply). The combination may be useful, for example, when there are only increased requirements for dielectric strength and immunity to interference, but the ambient temperature is not critical.

Interference-Free in Safety-Related Applications

To safely and easily perform cost-effective, centralized deactivation of complete actuator groups, the actuator's power supply can be switched off using a safety switching device. This can either be performed for each individual actuator or by turning off the power supply to a group of control outputs.

In the event of failure, ensure that no interference from other current or power circuits occurs – even when the control voltage is switched off – so the defined safety function properties (logic and time response) remain unchanged.

All modules are designed to provide interference-free safety functionality. These modules comply with safety requirements up to Category 4 of DIN EN ISO 13849-1:2007. Safety category and performance level depend solely on the safety components and their wiring.

Notice:

Interference-free WAGO I/O modules have no active influence on the safety function, they are not an active part of the safety application and are not a substitute for the safety switching device! When using the components in safety functions, the corresponding notes must be observed in the relevant manual.

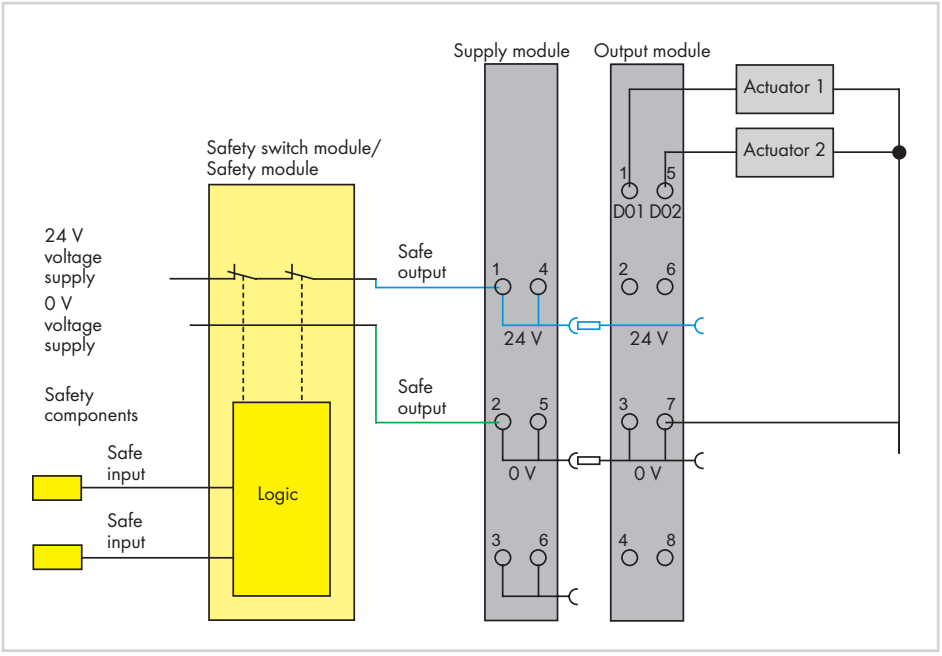

General Specifications

Operating voltage	24 VDC under laboratory conditions +15 °C ... +35 °C: 18 V ... 31.2 V (17.4 V ... 31.2 V)[1] for -40 °C ... +55 °C: 18 V ... 28.8 V (17.4 V ... 28.8 V)[1] for +55 °C ... +70 °C: 18 V ... 26.4 V (17.4 V ... 26.4 V)[1] [1] Including residual ripple of 15 %
Operating temperature	-40 °C ... +70 °C
Storage temperature	-40 °C ... +85 °C
Relative humidity	Max. 95 % short-term condensation acc. to class 3K7 / IEC EN 60721-3-3 (excluding wind-driven precipitation, water and ice formation)
Operating altitude	without temperature derating: 0 m ... 2000 m; with temperature derating: 2000 m ... 5000 m (0.5 K/100 m); max.: 5000 m
Degree of contamination	2 acc. to IEC 61131-2
Dielectric strength	acc. (EN 60870-2-1) Modules ≤ 50 V: 510 VAC/775 VDC; Modules > 50 V: 2.5 kVAC/3.5 kVDC Isolation: Rated surge voltage Modules ≤ 50 V: 1 kV (class VW1 acc. to EN 60870-2-1) Modules > 50 V: 5 kV (class VW3 acc. to EN 60870-2-1) Surge: Modules ≤ 50 V: 1 kV (L – L) / 2 kV (L – E) Modules > 50 V: 2 kV (L – L) / 4 kV (L – E)
Vibration resistance	5g acc. to IEC 60068-2-6, EN 60870-2-2, IEC 60721-3-1, IEC 60721-3-3, EN 61131-2
Shock resistance	15g/11 ms/half-sine/1000 shocks acc. to IEC 60068-2-27 25g/6 ms/1000 shocks acc. to IEC60068-2-27
EMC immunity to interference	EN 61000-6-1, EN 61000-6-2, EN 61131-2 Marine applications, EN 50121-3-2, EN 50121-4 EN 50121-5, EN 60255-26, EN 60870-2-1 EN 61850-3, IEC 61000-6-5, IEEE 1613, VDEW: 1994
EMC emission of interference	EN 61000-6-3 and EN 61000-6-4, EN 61131-2 EN 60255-26, marine applications EN 60870-2-1 (industrial and residential areas) EN 61850-3 (industrial and residential areas) EN 50121-3-2, EN 50121-4, EN 50121-5
Protection type	IP20
Mounting position	standing horizontal/lying, vertical
Type of mounting	DIN-rail
Housing material	Polycarbonate, polyamide 6.6
Stress due to contaminants	acc. to IEC 60068-2-42 and IEC 60068-2-43
Maximum pollutant concentration with a relative humidity < 75 %	SO2 ≤ 25 ppm; H2S ≤ 10 ppm
Connection technology	CAGE CLAMP®
Conductor cross-section; stripped lengths	0.25 mm² ... 2.5 mm²/24 ... 14 AWG; 8 ... 9 mm/0.33 in.
Current via power jumper contacts	max. 10 A

PLC - ETHERNET Programmable Fieldbus Controller

for eXTReme environmental conditions; 32-bit CPU, multitasking

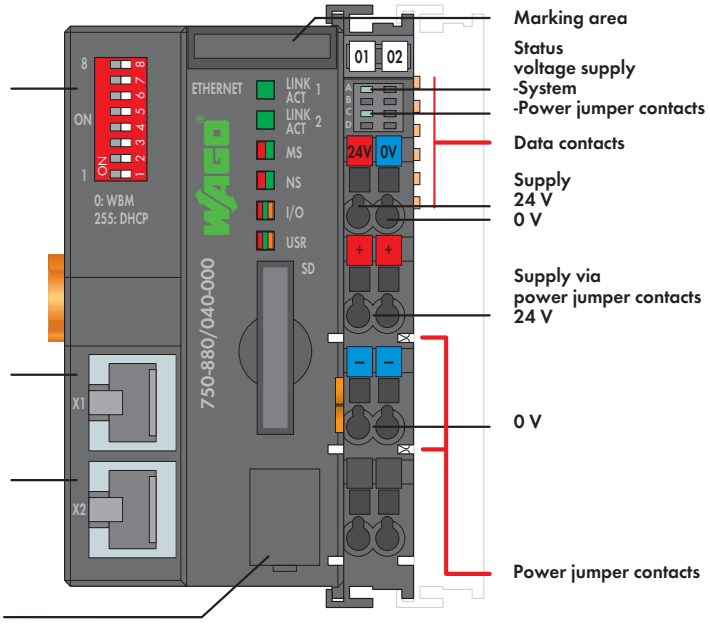

In conjunction with the WAGO-I/O-SYSTEM, the ETHERNET PLC is used as a programmable controller within ETHERNET networks.
The PLC supports all digital, analog, and specialty modules found within the 750/753 Series, and is suitable for data rates of 10/100 Mbit/s.
Two ETHERNET interfaces and an integrated switch enable fieldbus wiring in a line topology. This eliminates additional network devices, such as switches or hubs. Both interfaces support Auto-Negotiation and Auto-MDI(X).
The DIP switch configures the last byte of the IP address and may be used for IP address assignment.
The PLC supports both MODBUS/TCP and ETHERNET/IP for use in industrial environments. It also supports a wide variety of standard ETHERNET protocols for easy integration into IT environments (e.g., HTTP, BootP, DHCP, DNS, SNTP, SNMP, FTP).
For telecontrol applications, the 750-880/040-001 Controller supports the IEC 60870-5-101/-103-104, IEC 61850-7 and IEC 61400-25 communication protocols.

An integrated Web server provides the user with configuration options and status information from the controller.
The IEC 61131-3 programmable controller is multitasking-capable and features a battery-backed RTC.
A data memory of 1 MB is available.
The 750-880 PLC has a slot for a removable memory card, allowing device parameters or files (e.g., boot files) to be transferred from one controller to another. The memory card can be accessed via FTP and be used as an additional drive.

The module is ideally suited for operation in harsh environmental conditions:
- strongly extended temperature range
- higher dielectric strength and EMC resistance
- higher vibration and shock resistance

Description	Item No.	Pack. Unit
ETHERNET Controller /XTR	**750-880/040-000**	1
ETHERNET Telecontroller /XTR	**750-880/040-001**	1

Accessories		Item No.	Pack. Unit
SD memory card, 2 GB		**758-879/000-001**	1
WAGO-I/O-PRO V2.3, RS-232 kit		**759-333**	1
WAGO-I/O-PRO V2.3, USB kit		**759-333/000-923**	1
Miniature WSB Quick marking system			
	plain	**248-501**	5
	with marking	see Section 11	

Approvals

Conformity marking	CE
Korea Certification	KC
Marine applications	GL
UL 508	
ANSI/ISA 12.12.01	Class I, Div. 2, Grp. ABCD, T4

System Data

No. of controllers connected to Master	limited by ETHERNET specification
Transmission medium	Twisted Pair S-UTP
	100 Ω, Cat 5;
	Max. line length: 100 m
Baud rate	10/100 Mbit/s
Transmission performance	Class D acc. to EN 50173
Buscoupler connection	2 x RJ-45
Protocols	EtherNet/IP, MODBUS/TCP (UDP), HTTP,
	BootP, DHCP, DNS, SNTP, FTP, SNMP
750-880/040-001	IEC 60870-5-101/-103/-104, IEC 61850,
	IEC 61400-25, DNP3
Programming	WAGO-I/O-PRO
IEC 61131-3	IL, LD, FBD (CFC), ST, FC
SD card slot	Push-push mechanism, sealable cover lid
Type of memory card	SD and SDHC up to 32 GB (All
	guaranteed properties are only valid in
	connection with the WAGO 758-879/
	000-001 memory card.)

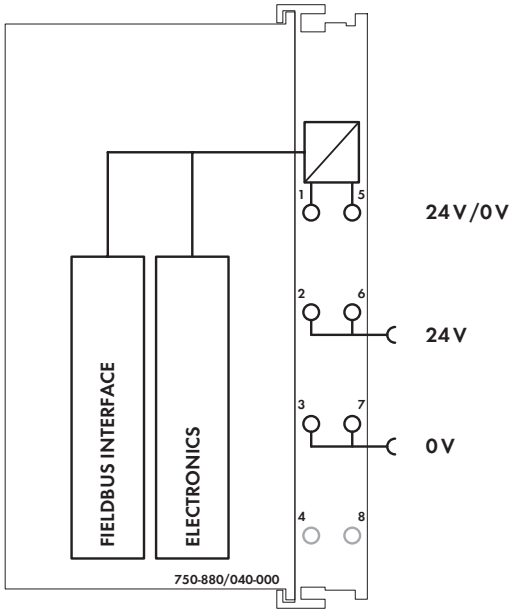

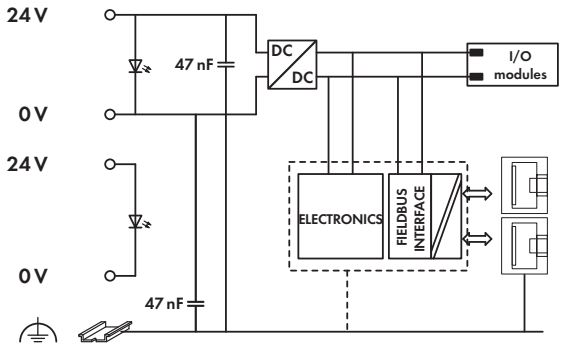

Technical Data

Number of I/O modules	64
Fieldbus	
Max. input process image	1020 words
Max. output process image	1020 words
Configuration	via PC
Program memory	1024 Kbytes
Data memory	1024 Kbytes
Non-volatile memory (retain)	32 Kbytes
Power supply	via CAGE CLAMP® connections, 24 VDC
under laboratory conditions +15 °C ... +35 °C	18 V ... 31.2 V (17.4 V ... 31.2 V)[1)]
for -40 °C ... +55 °C	18 V ... 28.8 V (17.4 V ... 28.8 V)[1)]
for +55 °C ... +70 °C	18 V ... 26.4 V (17.4 V ... 26.4 V)[1)]
	[1)] including residual ripple of 15 %
Input current typ. at rated load (24 V)	500 mA
Efficiency of the power supply (typ.) at	
nominal load (24 V)	90 %
Internal current consumption (5 V)	450 mA
Total current for I/O modules (5 V)	1700 mA
	up to 60°C operating temperature;
	1500 mA > 60°C operating temperature
Voltage via power jumper contacts	24 V DC
Rated surge voltage	1 kV

General Specifications

Operating temperature	-40 °C ... +70 °C
Wire connection	CAGE CLAMP®
Cross sections	0.25 mm² ... 2.5 mm² / AWG 24 ... 14
Strip lengths	8 ... 9 mm / 0.33 in
Dimensions (mm) W x H x L	62 x 65 x 100
	Height from upper-edge of DIN 35 rail
Weight	164 g
Storage temperature	-40 °C ... +85 °C
Relative humidity	95 %, short-term condensation acc. to class
	3K7 / IEC EN 60721-3-3 (except wind-
	driven precipitation, water and ice
	formation)
Vibration resistance	acc. to IEC 60068-2-6 (acceleration: 5g),
	EN 60870-2-2, IEC 60721-3-1, -3,
	EN 61131-2
Shock resistance	acc. to IEC 60068-2-27
Degree of protection	IP20
EMC immunity of interference	acc. to EN 61000-6-1, -2, EN 61131-2,
	marine applications, EN 50121-3-2, -4, -5,
	EN 60255-26, EN 60870-2-1,
	EN 61850-3, IEC 61000-6-5, IEEE 1613,
	VDEW: 1994
EMC emission of interference	acc. to EN 61000-6-3, -4, EN 61131-2,
	EN 60255-26, marine applications,
	EN 60870-2-1, EN 61850-3,
	EN 50121-3-2, -4, -5
Operating altitude	without temperature derating: 0 m ... 2000 m;
	with temperature derating: 2000 m ... 5000 m
	(0.5 K/100 m); max.: 5000 m

PLC - CANopen Programmable Fieldbus Controller, D-Sub

for eXTReme environmental conditions; 16-bit CPU

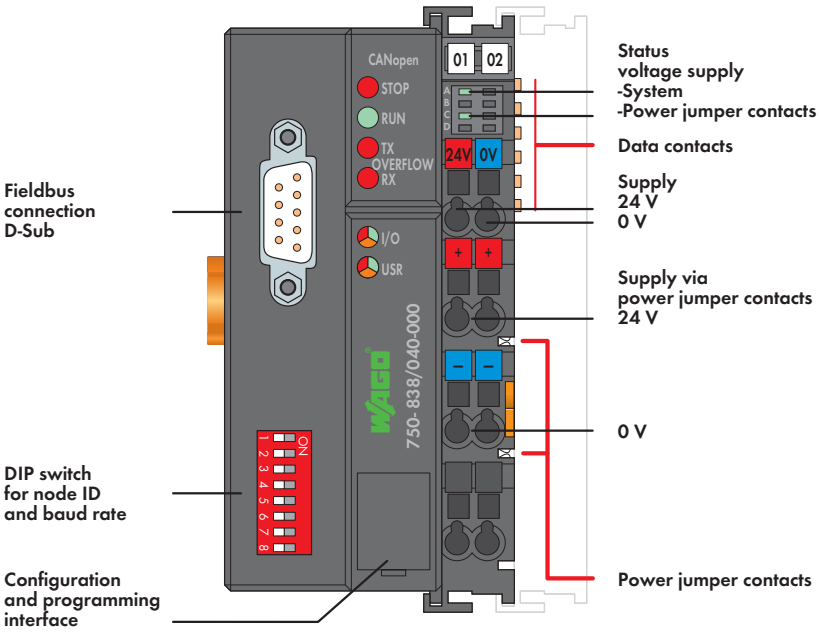

The CANopen PLC combines control functionality, I/O interface and fieldbus in one device.

Programming PLC applications is performed in compliance with IEC 61131-3. The programmer can access all fieldbus and I/O data.

Features and applications:

- Central control system is assisted by decentralized processing units
- Complex applications are divided into independent, testable units
- Programmable fault response in the event of a fieldbus failure
- Signal pre-processing reduces fieldbus transmissions
- Peripheral equipment can be controlled directly, resulting in faster system response times
- Compact, self-sufficient controller

The module is ideally suited for operation in harsh environmental conditions:
- strongly extended temperature range
- higher dielectric strength and EMC resistance
- higher vibration and shock resistance

Notice: EDS files required

Description	Item No.	Pack. Unit
CANopen Controller /XTR	**750-838/040-000**	1

Accessories		Item No.	Pack. Unit
EDS files	Download: www.wago.com		
WAGO-I/O-PRO V2.3, RS-232 kit		**759-333**	1
WAGO-I/O-PRO V2.3, USB kit		**759-333/000-923**	1
Miniature WSB Quick marking system			
	plain	**248-501**	5
	with marking	see Section 11	

Approvals

Conformity marking	CE
Korea Certification	KC
Marine applications	GL
cULus UL 508	
cULus ANSI/ISA 12.12.01	Class I, Div. 2, Grp. ABCD, T4

System Data

No. of controllers connected to Master	110
Transmission medium	Shielded Cu cable 3 x 0.25 mm²
Max. length of bus line	30 m ... 1000 m
	(depends on baud rate/cable)
Baud rate	10 Kbaud ... 1 Mbaud
Buscoupler connection	1 x D-Sub 9; plug
Programming	WAGO-I/O-PRO V2.3
IEC 61131-3	IL, LD, FBD (CFC), ST, FC

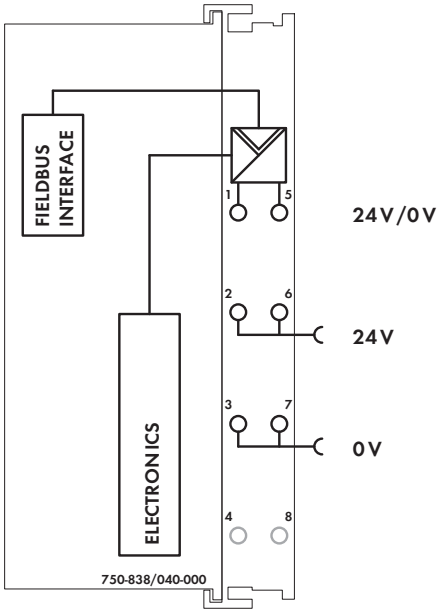

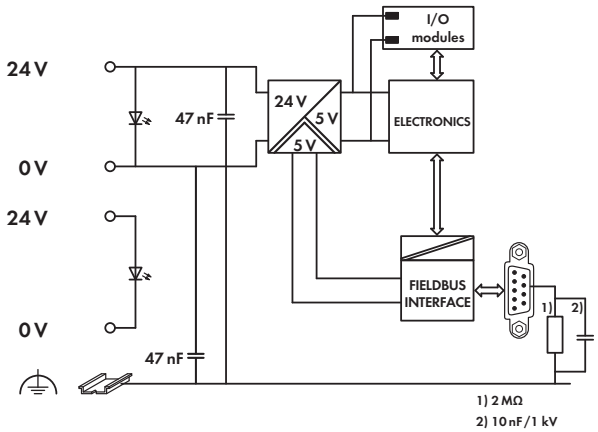

Technical Data

Number of I/O modules	64
Fieldbus	
Max. input process image	512 bytes
Max. output process image	512 bytes
Max. input variables	512 bytes
Max. output variables	512 bytes
Configuration	via PC or PLC
Program memory	640 Kbytes
Data memory	832 Kbytes
Non-volatile memory (retain)	8 Kbytes
Cycle time	< 3 ms for 1,000 statements / 256 dig. I/Os
No. of PDOs	32 Tx / 32 Rx
No. of SDOs	2 server SDOs / 16 client SDOs
Communication profile	DS-301 V4.01
Device profile	DS-401 V 2.0
	Marginal check
	Edge-triggered PDOs
	Programmable error response
	DSP 405
	using function blocks NMT master can be programmed
COB ID distribution	SDO, standard
Node ID distribution	DIP switches
Other CANopen features	NMT slave
	Minimum boot-up
	Variable PDO mapping
	Emergency message
	Life guarding / heartbeat
	Configuration of virtual modules
Power supply	via CAGE CLAMP® connections, 24 VDC
under laboratory conditions +15 °C ... +35 °C	18 V ... 31.2 V (17.4 V ... 31.2 V)[1]
for -40 °C ... +55 °C	18 V ... 28.8 V (17.4 V ... 28.8 V)[1]
for +55 °C ... +70 °C	18 V ... 26.4 V (17.4 V ... 26.4 V)[1]
	[1] including residual ripple of 15 %
Max. input current (24 V)	500 mA
Power supply efficiency	90 %
Internal current consumption (5 V)	350 mA
Total current for I/O modules (5 V)	1650 mA
	up to 60 °C operating temperature;
	1250 mA > 60 °C operating temperature
Voltage via power jumper contacts	24 V DC

General Specifications

Current via power jumper contacts (max.)	10 A DC
Rated surge voltage	1 kV
Operating temperature	-40 °C ... +70 °C
Wire connection	CAGE CLAMP®
Cross sections	0.25 mm² ... 2.5 mm² / AWG 24 ... 14
Strip lengths	8 ... 9 mm / 0.33 in
Dimensions (mm) W x H x L	51 x 65 x 100
	Height from upper-edge of DIN 35 rail
Weight	200 g
Storage temperature	-40 °C ... +85 °C
Relative humidity	95 %, short-term condensation acc. to class 3K7 / IEC EN 60721-3-3 (except wind-driven precipitation, water and ice formation)
Vibration resistance	acc. to IEC 60068-2-6 (acceleration: 5g), EN 60870-2-2, IEC 60721-3-1, -3, EN 61131-2
Shock resistance	acc. to IEC 60068-2-27
Degree of protection	IP20
EMC immunity of interference	acc. to EN 61000-6-1, -2, EN 61131-2, marine applications, EN 50121-3-2, -4, -5, EN 60255-26
EMC emission of interference	acc. to EN 61000-6-3, -4, EN 61131-2, EN 60255-26, marine applications, EN 60870-2-1, EN 61850-3, EN 50121-3-2, -4, -5
Operating altitude	without temperature derating: 0 m ... 2000 m; with temperature derating: 2000 m ... 5000 m (0.5 K/100 m); max.: 5000 m

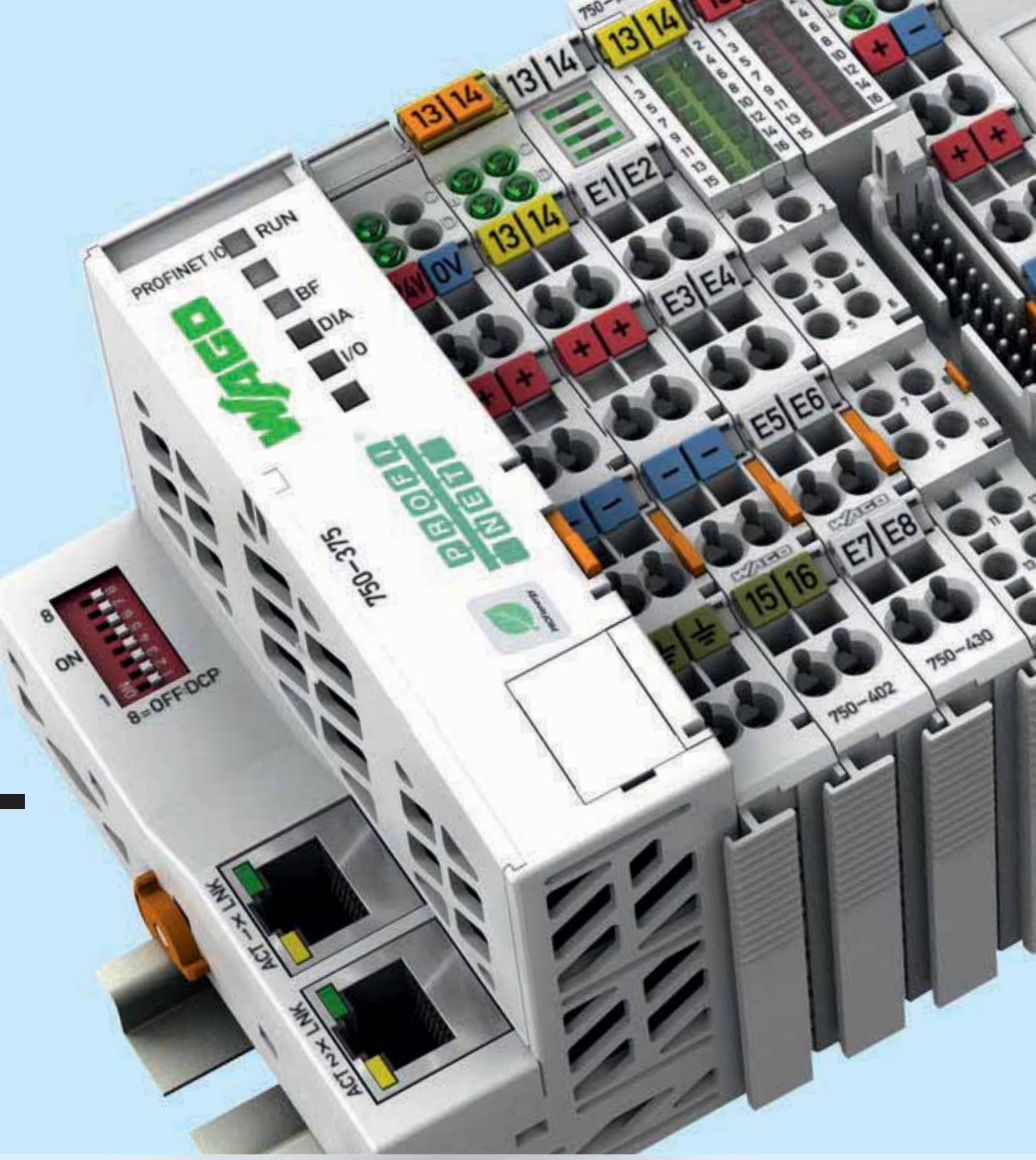

I/O-System – 750 and 753 Series

I/O-System – 750 and 753 Series

- Highly versatile
- More than 500 modules available
- Functional safety
- Ex i

Section 5 ▶

I/O-System – 750 XTR Series

For demanding applications where the following are critical:

- Extreme temperature stability
- Immunity to interference and dielectric strength
- Vibration and shock resistance

Section 6 ▶▶

I/O-System – *SPEEDWAY*

- Uncompromising protection, even in the harshest environments outside the control cabinet
- Degree of protection: IP67
- Fully encapsulated

				Page
	General Product Information			118
	Versions			119
	Interfaces and Configurations			120
	Markings and Mounting Accessories			121
	Application and Installation Instructions			122
	Item Number Keys			124
	Standards and Rated Conditions			125
	Fieldbus Couplers (FC)	PROFINET IO, PROFIBUS, Ethernet TCP/IP, EtherCAT, MODBUS/TCP, DeviceNet, CANopen, sercos, MODBUS, INTERBUS, CC-Link	**4.1**	126
	I/O Modules	Digital Input Modules (DI)	**4.2**	182
		Digital Output Modules (DO)	**4.3**	218
		Analog Input Modules (AI)	**4.4**	250
		Analog Output Modules (AO)	**4.5**	280
		Function and Technology Modules	**4.6**	290
		Communication Modules	**4.7**	312
		Functional Safety	**4.8**	330
		Intrinsically Safe Modules	**4.9**	340
		Supply and Segment Modules	**4.10**	368
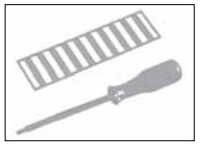	**Accessories** Marking and Mounting Accessories			Section 11

I/O-System – 750 and 753 Series – One System for Every Application

General Product Information

One System for Every Application

The WAGO-I/O-SYSTEM 750/753 is characterized by its universal application scope and extensive product portfolio. With more than 500 different modules, the versatility and flexibility is so great that virtually every requirement in a wide range of industries is covered.

Industrial Automation

The wide selection of I/O modules for various potential and signal forms, as well as specialty functions, makes it possible to economically wire sensors/actuators – even in safety-related applications.

Building Automation

The broad portfolio allows for flexible, cellar-to-ceiling solutions with conventional I/O modules, standardized industry-specific fieldbus protocols and subsystems for typical applications in lighting, shading, heating, ventilating and air conditioning (HVAC) and more.

Marine and Onshore/Offshore Automation

International approvals coupled with industry-specific features permit use in shipbuilding and other harsh sectors. Addressing industry- and operating environment-specific requirements has enabled use on marine diesels and in the EMC-sensitive area of a vessel's bridge. Because WAGO meets the marine industry's significantly greater requirements for immunity to interference or emission of interference and mechanical performance, WAGO I/O is well-suited to other industries.

Process Automation

Use even under the harshest environmental conditions is possible with special approvals. Potential hazardous location applications include oil and gas production, the chemical industry and power generation. The WAGO-I/O-SYSTEM can be installed in Zone 2/22 with its intrinsically safe I/O modules making it possible to connect sensors/actuators in Zones 1/21 and 0/20.

Maximum Fieldbus Independence

The system's modularity is also reflected in its support for numerous fieldbus systems and ETHERNET standards. Depending on the application, it is possible to choose between fieldbus couplers and communication modules for different protocols.

Easy to Use

The modular, rail-mounted module design permits easy, tool-free installation and straightforward modifications, such as system expansions. The straightforward design prevents installation errors. In addition, proven CAGE CLAMP® technology offers fast, vibration-proof and maintenance-free connections that are independent of operator skill. Depending on the I/O module's granularity, the field peripherals can be wired directly using 1-, 2-, 3- or 4-wire technology.

Worldwide Approvals

International approvals for building and industrial automation, as well as the process and shipbuilding industries guarantee worldwide use even under harsh operating conditions, e.g., ATEX, BR-Ex, IECEx, UL 508 and UL ANSI/ISA.

Extremely Compact

Our patented mechanical design leads to extremely compact I/O nodes. In fact, select I/O modules can accommodate up to 16 channels in a 12 mm (1/2") wide housing.

- Finely granular I/O modules enable customization of nodes
- Space-saving design allows high integration density and direct connection

Maximum Reliability and Ruggedness

The WAGO-I/O-SYSTEM is also designed for applications operating under the most demanding environmental conditions in accordance with the highest standards, e.g., those required in shipbuilding. The system is distinguished from other products that are solely intended for industrial use because of:

- Greatly increased vibration rating
- Significantly greater immunity to interference (ESD)
- Lower emission of interference
- Larger voltage fluctuation range
- Improved ruggedness for continuous operation in a temperature range near the limit

In addition, CAGE CLAMP® spring pressure connections ensure superior reliability. Integrated QA measures in the production process and 100 % function testing ensure consistent quality.

Clear Identification

Pullout group markers identify module functionality (integrated or as an option). Connector assignment and technical data are located on the side of the module. The WAGO WSB marker system also allows for module- and channel-related identification.

- Fieldbus-independent – compatible with all standard fieldbus protocols & ETHERNET standards
- Flexible platform adapts to diverse applications and environments
- Tested and approved worldwide
- Wide range of accessories for marking and connection technology
- CAGE CLAMP® connection technology for vibration-proof, fast and maintenance-free connection

I/O-System – 750 and 753 Series
Versions

Pluggable connector

The pluggable connections of the WAGO-I/O-SYSTEM 753 allow quick and safe replacement. Optional coding pins prevent inserting the pluggable connector in the wrong I/O module. Replacing and connecting the I/O module requires no further action and eliminates possible errors – permanent wiring.
Alternatively, field wiring is possible via interface modules that can be connected to the I/O-System using a ribbon cable (see Configurations).

Extended temperature range

Industrial automation technology is typically operated in temperatures ranging from 0 °C to 55 °C. However, there are also applications that require an extended temperature range. For these applications, WAGO offers a line of WAGO-I/O-SYSTEM 750 products for temperatures ranging from -20 °C to +60 °C.
For extreme applications, where even this extended temperature range is not sufficient, the WAGO-I/O-SYSTEM 750 XTR is available.

Functional safety

In the European Union, the machinery directive defines the requirements for machine and system safety. This ensures a uniform standard for the protection of "life and limb" for people within a machine's operating area.

The required risk assessment is based on harmonized standards (e.g., EN 13849) that identifies existing risks and required risk reduction (SIL or PL quality). Based on the risk assessment, safety functionality can be implemented, e.g., by presence detection or protection zone violations using secure switches or light arrays to immediately shutdown the "risk". For this purpose, the safety signals are detected by the "yellow" safety modules and transmitted via "PROFIsafe" to the F-SPS for further processing. The result is then executed via a safe actuator (output module, controller, etc.).

The unique safety characteristic values of the WAGO modules facilitate calculation of the final safety function up to Cat. 4/PLe according to EN 13849, or SIL3 according to EN 62061 or IEC 61511.

The mixed operation of safe and conventional modules streamlines system configuration. For increased EMC immunity required according to the standard, WAGO offers compact filter modules for the power supply. Specific features of the power supply must be considered, which are described in detail in the corresponding manuals.

Use in hazardous locations

In many plants within the chemical or petrochemical industries, as well as production and process automation, machinery is operated that processes explosive materials including gas and combustible dust. This is why electrical equipment must be explosion-proof in order to avoid injuries to personnel and equipment damage.
The modules within the WAGO-I/O-SYSTEM 750 are designed for use in both non-potentially explosive and potentially explosive areas.
The direct application of fieldbus technology in potentially explosive areas is typically resource-intensive. When used in hazardous areas of Zone 2/22, the WAGO-I/O-SYSTEM 750 offers a safe, easy and economical connection to the sensors and actuators of Zones 0/20 and 1/21. Then WAGO has also developed "blue" Ex-i I/O modules for these intrinsically safe applications, providing users with all the benefits of modern fieldbus technology integrated into a standard node. The WAGO-I/O-SYSTEM 750 is also approved for mining applications.

I/O-System – 750 and 753 Series
Interfaces and Configurations

Ⓐ

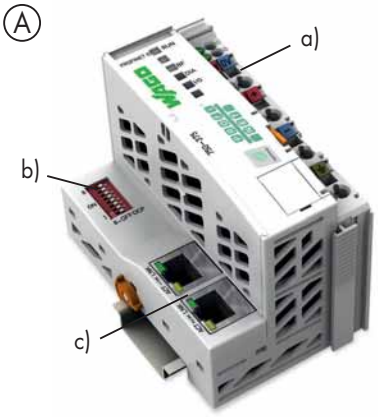

Housing design fieldbus coupler (A)
- Including supply module (a) to power downstream I/O modules
- Technical differences on the connection level. Optional address switch (b) and fieldbus interface (c)
- W x H* x L (mm) 51 x 65 x 100 or
- W x H* x L (mm) 62 x 65 x 100

Housing design fieldbus coupler ECO (B)
- Restriction on power supply and data width
- W x H* x L (mm) 50 x 65 x 97

Ⓑ

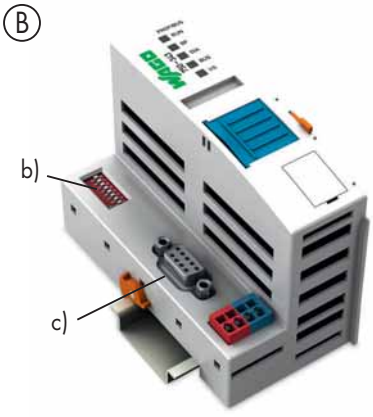

Ⓒ

Housing design 750 (C)
- 8 connection terminals (CAGE CLAMP®)
- W x H* x L (mm) 12 x 65 x 100

Housing design 753 (D)
- Pluggable connector
- 8 connection terminals (CAGE CLAMP®)
- W x H* x L (mm) 12 x 65 x 100

Ⓓ

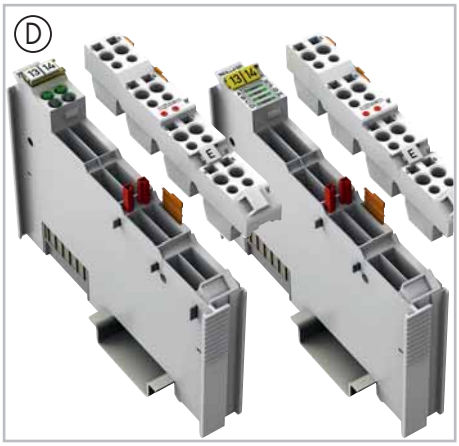

Ⓔ

Housing design 750 (E)
- 16 connection terminals (Push-in CAGE CLAMP®)
- W x H* x L (mm) 12 x 65 x 100

Housing design 750 (F)
- For time-saving wiring between I/O-System and interface modules
- Ribbon cable connector for connection to 289 Series Interface Modules and *JUMPFLEX*® Interface Adapter
- W x H* x L (mm) 12 x 73 x 100

Ⓕ

Ⓖ

Housing design double width (G)
Some modules are integrated into a double housing to address specific technological needs. Despite utilizing the same standardized housing, these modules are twice as wide.
- W x H* x L (mm) 24 x 65 x 100

Special housing design (H)
Some modules are integrated into a specialized housing with a specific width and pluggable connectors. The dimensions are specified on the respective catalog page.

Ⓗ

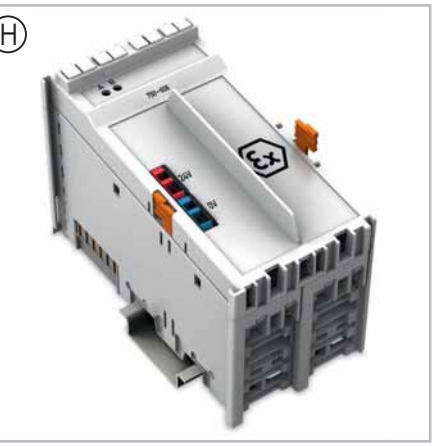

*Height from upper edge of the DIN-rail

Transparent group marker carriers to indicate module type by color.

Removable group marker carriers are available for all 750 and 753 Series I/O modules with a maximum of four LEDs, as well as all fieldbus couplers with a supply module.

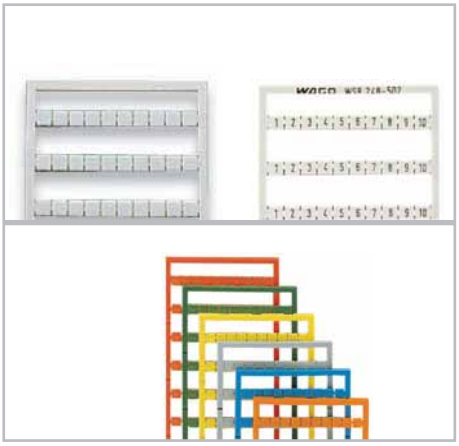

Miniature WSB quick marking system, blank, pre-marked and colored. Suitable for all 750 and 753 Series I/O modules.

Marker carrier for an individual I/O module. Suitable for all 750 and 753 Series I/O modules. The marker carrier can be placed in the upper, miniature WSB carrier plate.

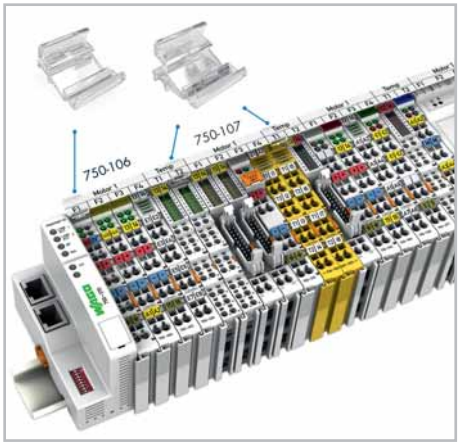

Marker carriers for an I/O node. Both carrier models (750-106 and 750-107) permit continuous marking regardless of the I/O module housing used.

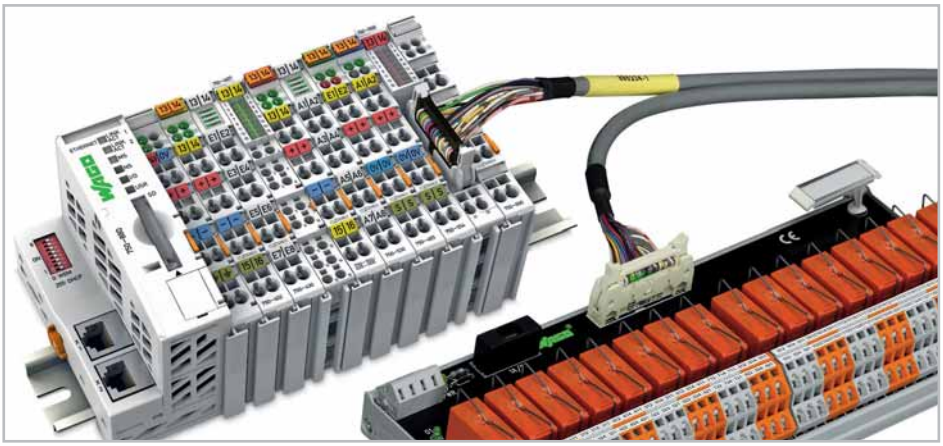

Interface modules for system wiring

Interface cables

Power supply

The fieldbus coupler always powers the internal electronics' power supply. The field-side power supply is electrically isolated via the supply module on the fieldbus coupler or a separate potential supply module. The division enables a separate supply for sensors and actuators. Snapping I/O modules together automatically routes the supply voltages (system power supply 5 VDC via the data contacts and field supply via the optional power jumper contacts). Supply modules with diagnostics enable additional power supply monitoring. This ensures a flexible, user-specific supply design for a station.

The current supply to the electronics is limited by a maximum value. This value depends on the fieldbus coupler used. If the sum of the internal current demand of all the I/O modules exceeds this value, an additional bus supply module is necessary. Even in this case, the power supply to the field-side supply of 10 A may not be exceeded. However, different power supply modules allow a new power supply, formation of potential groups and the implementation of emergency stops.

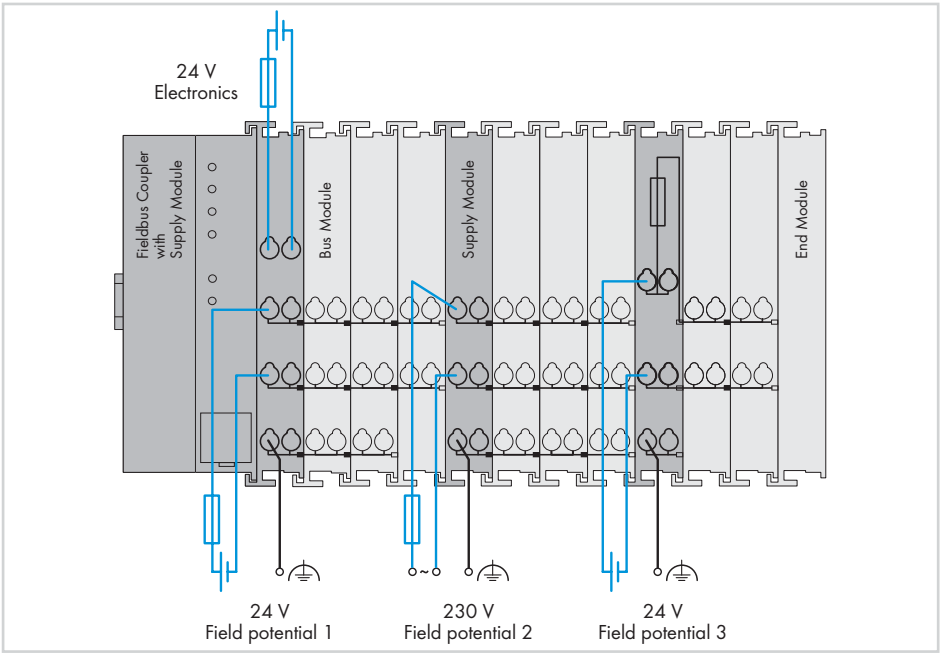

Notes

Additional steps must be implemented based on where the I/O-System is installed:

- Specific power and field-side power supply filters (750-624/626) are required for **marine** and onshore/offshore applications.
- A specific supply module (750-625) is required to operate **intrinsically safe Ex i modules**. Additionally, both a supply module and a field-side power supply filter are recommended when operating **intrinsically safe Ex i modules for marine** and onshore/offshore applications.
- For the 24 VDC power supply of electronics and field, PELV/SELV power supply units are recommended. As part of a safety-related application, they are mandatory.
- The mixed operation of safe and conventional modules streamlines system configuration. For increased EMC immunity required according to the standard, WAGO offers compact filter modules for the power supply.

Please refer to the manual for details about the power supply's design.

Interference-free in safety-related applications

To safely and easily perform cost-effective, centralized deactivation of complete actuator groups, the actuator's power supply can be switched off using a safety switching device. This can either be performed for each individual actuator or by turning off the power supply to a group of control outputs.

In the event of failure, ensure that no interference from other current or power circuits occurs – even when the control voltage is switched off – so the defined safety function properties (logic and time response) remain unchanged.

Some modules are designed to provide interference-free safety functionality. These modules comply with safety requirements up to Category 4 of DIN EN ISO 13849-1:2007. The safety category and performance level depend solely on the safety components and their wiring.

Attention!
Interference-free WAGO I/O modules have no active impact on the safety function – they are not an active part of the safety application and are not a substitute for the safety switching device! When using the components in safety functions, the corresponding notes must be observed in the relevant manual.

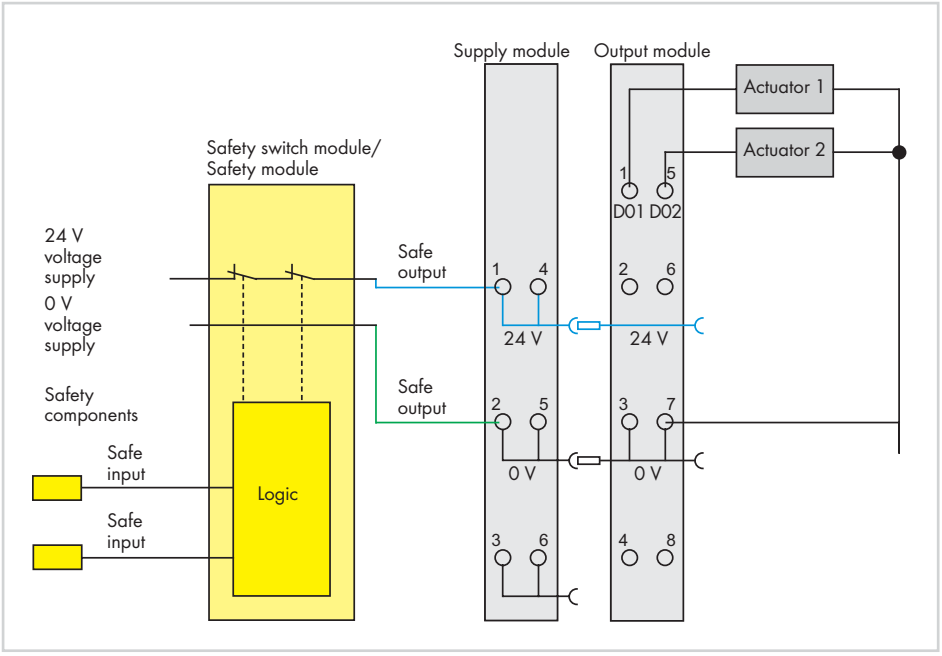

Example: Two-channel, double-pole power supply disconnection

Attachment/release on the mounting rail

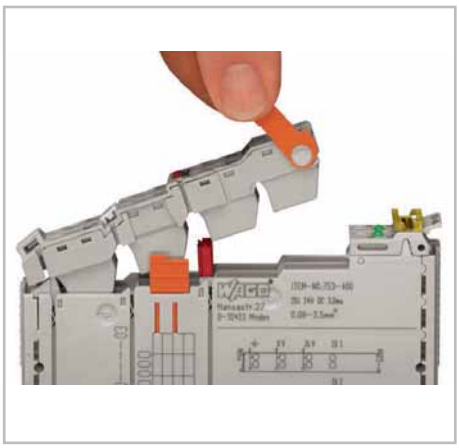

Releasing the pluggable connector

Optional protection against mismating of pluggable connectors via coding elements

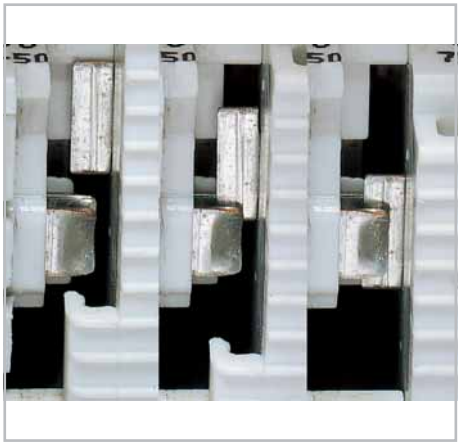

Secure, automatic connection of the power supply by self-cleaning blade contacts

Notice:
Within select I/O modules, not all power jumper contacts are made! An I/O module with three power jumper contacts (e.g., 2-channel digital input) cannot be snapped into place behind an I/O module in which not every contact is made.

To increase electromagnetic compatibility (EMC), some components are connected to the DIN-rail by a discharge contact. The DIN-rail must always have a low-resistance connection to the ground potential.

Wide range of accessories for EMC-compliant installation including shield connection

Secure, automatic connection of the data and electronics power supply by gold-plated pressure contacts

Securing the cable to the connector

Service interface for configuring the fieldbus coupler. Connectivity via configuration cable or radio adapter

I/O-System – 750 and 753 Series

Item Number Keys

Explanation of the components for the item number key

Item No. : 75x-yyzz

750 Series: Standard
753 Series: Pluggable connector

01zz: Marker
03zz: Fieldbus coupler
zz: Consecutive number

1yzz: 16 connection points or ribbon cables
y4zz: Input
00 ... 49 = Digital input
50 ... 99 = Analog input
04: Counter
y5zz: Output
00 ... 49 = Digital output
50 ... 99 = Analog input
11: PWM
y6zz: Function / technology / communication / system module
0z: Power supply, potential duplication, end module
1z: Power supply, potential duplication, separation modules
2z: Power supply, bus extension, filter, separation modules
3z: Distance and angle measurement, DC drive controller, counter
4z: Communication (building), radio, RTC, vibration monitoring
5z: Serial interfaces, communication
6z: Functional safety
.../000-001: PROFIsafe V1.3
.../000-002: PROFIsafe V2
.../000-003: PROFIsafe V2 iPar
7z: Stepper

09zz: Accessories

.../025-000: Extended temperature range -20 °C ... +60 °C
.../000-800: Interference-free
.../040-000: 750 XTR Series, see Section 5

General Specifications	
Operating voltage	24 VDC (-25 % ... +30 %)*; *for all shipbuilding-certified fieldbus couplers and I/O modules
Operating temperature	0 °C ... +55 °C
Operating temperature for versions with an extended temperature range	-20 °C ... +60 °C
Storage temperature	-25 °C ... +85 °C
Storage temperature for versions with an extended temperature range	-40 °C ... +85 °C
Relative humidity (without condensation)	95 %
Operating altitude	without temperature derating: 0 m ... 2000 m; with temperature derating: 2000 m ... 5000 m (0.5 K/100 m); max.: 5000 m
Degree of contamination	2 acc. to IEC 61131-2
Vibration resistance	0.5g (4g for all shipbuilding-certified fieldbus couplers and I/O modules) acc. to IEC 60068-2-6
Shock resistance	15g acc. to IEC 60068-2-27
EMC immunity to interference	acc. to EN 61000-6-2 / marine applications
EMC emission of interference	acc. to EN 61000-6-3 / EN 61000-6-4 / marine applications
Protection type	IP20
Mounting position	any
Type of mounting	on DIN 35 rail
Housing material	Polycarbonate, polyamide 6.6
Stress due to contaminants	acc. to IEC 60068-2-42 and IEC 60068-2-43
Maximum contaminant concentration with a relative humidity < 75 %	SO2 ≤ 25 ppm; H2S ≤ 10 ppm
Connection technology	CAGE CLAMP®
Conductor cross-section; stripped lengths for standard I/O modules and fieldbus couplers: 753 Series I/O Modules: ECO Fieldbus Couplers:	 0.08 mm² ... 2.5 mm²/28 ... 14 AWG; 8 ... 9 mm/0.33 in. 0.08 mm² ... 2.5 mm²/28 ... 14 AWG; 9 ... 10 mm/0.37 in. 0.08 mm² ... 1.5 mm²/28 ... 16 AWG; 5 ... 6 mm/0.22 in.
Connection technology	Push-in CAGE CLAMP®
Conductor cross-section; stripped lengths for I/O modules with 16 connecting terminals:	solid: 0.08 mm² ... 1.5 mm²/28 ... 16 AWG, fine-stranded: 0.25 mm² ... 1.5 mm²/22 ... 16 AWG; 8 ... 9 mm/0.33 in.
Current via power jumper contacts	max. 10 A

Fieldbus Couplers

Housing Design I with System Power Supply	
Dimensions (mm) W x H x L	51 x 65 x 100 (Height from upper edge of the DIN-rail)
Wire connection	CAGE CLAMP®
Cross sections	0.08 mm² ... 2.5 mm² / 28 ... 14 AWG
Strip lengths	8 ... 9 mm / 0.33 in.

Housing Design II with System Power Supply	
Dimensions (mm) W x H x L	62 x 65 x 100 (Height from upper edge of the DIN-rail)

Housing Design without System Power Supply	
Dimensions (mm) W x H x L	50 x 65 x 97 (Height from upper edge of the DIN-rail)
Wire connection	CAGE CLAMP®
Cross sections	0.08 mm² ... 1.5 mm² / 28 ... 14 AWG
Strip lengths	5 ... 6 mm / 0.22 in.

Housing Design ECO	
Dimensions (mm) W x H x L	50 x 65 x 97 (Height from upper edge of the DIN-rail)
Wire connection	CAGE CLAMP®
Cross sections	0.08 mm² ... 1.5 mm² / 28 ... 16 AWG
Strip lengths	5 ... 6 mm / 0.22 in.

I/O-Systems; Fieldbus Couplers

Contents

Fieldbus System	Housing Design: with System Power Supply		without System Power Supply	ECO	Description	Item No.	Page
PROFINET	☐				**Fieldbus Coupler,** 100 Mbit	750-340	128
	☐				**Fieldbus Coupler,** 2-port, 100 Mbit	750-370	130
		☐			**Fieldbus Coupler,** advanced, 2-port	750-375	132
		☐			**Fieldbus Coupler,** advanced, 2-port, extended operating temperature range: -20 °C ... +60 °C	750-375/025-000	132
			☐		**Fieldbus Coupler,** advanced, ECO, 2-port	750-377	134
			☐		**Fieldbus Coupler,** advanced, ECO, 2-port, extended operating temperature range: -20 °C ... +60 °C	750-377/025-000	134
PROFIBUS	☐				**DP/FMS Fieldbus Coupler,** 12 Mbaud	750-303	136
	☐				**DP/V1 Fieldbus Coupler,** 12 Mbaud	750-333	138
	☐				**DP/V1 Fieldbus Coupler,** 12 Mbaud, extended operating temperature range: -20 °C ... +60 °C	750-333/025-000	138
				☐	**DP/ECO Fieldbus Coupler,** 12 Mbaud	750-343	140
	☐				**Fieldbus Coupler with Fiber Optic Plug,** 1.5 Mbaud	750-331	142
EtherNet/IP MODBUS/TCP			☐		**Fieldbus Coupler,** 10/100 Mbit	750-352	144
MODBUS/TCP	☐				**Fieldbus Coupler,** 10 Mbit	750-342	146
EtherCAT Conformance tested			☐		**Fieldbus Coupler,** 100 Mbit/s	750-354	148
			☐		**Fieldbus Coupler, ID-Switch,** 100 Mbit/s	750-354/000-001	150
DeviceNet	☐				**Fieldbus Coupler**	750-306	152
				☐	**ECO Fieldbus Coupler**	750-346	154
CANopen	☐				**Fieldbus Coupler**	750-307	156
	☐				**Fieldbus Coupler**	750-337	158
	☐				**Fieldbus Coupler,** extended operating temperature range: -20 °C ... +60 °C	750-337/025-000	158
	☐				**Fieldbus Coupler,** D-Sub	750-338	160
				☐	**ECO Fieldbus Coupler**	750-347	162
				☐	**ECO Fieldbus Coupler,** D-Sub	750-348	164
sercos the automation bus	☐				**Fieldbus Coupler,** 2-port., 100 Mbit	750-351	166
MODBUS	☐				**Fieldbus Coupler,** RS-485 (150 ... 115.2 kbaud)	750-315/300-000	168
	☐				**Fieldbus Coupler,** RS-232 (150 ... 115.2 kbaud)	750-316/300-000	170
INTERBUS	☐				**Fieldbus Coupler,** 500 kbaud	750-304	172
				☐	**ECO Fieldbus Coupler,** 500 kbaud	750-344	174
				☐	**ECO Fieldbus Coupler,** 2 Mbaud	750-345	176
	☐				**Fieldbus Coupler with Fiber Optic Plug**	750-334	178
CC-Link	☐				**Fieldbus Coupler**	750-310	180

PROFINET IO Fieldbus Coupler

10/100 Mbit/s; digital and analog signals

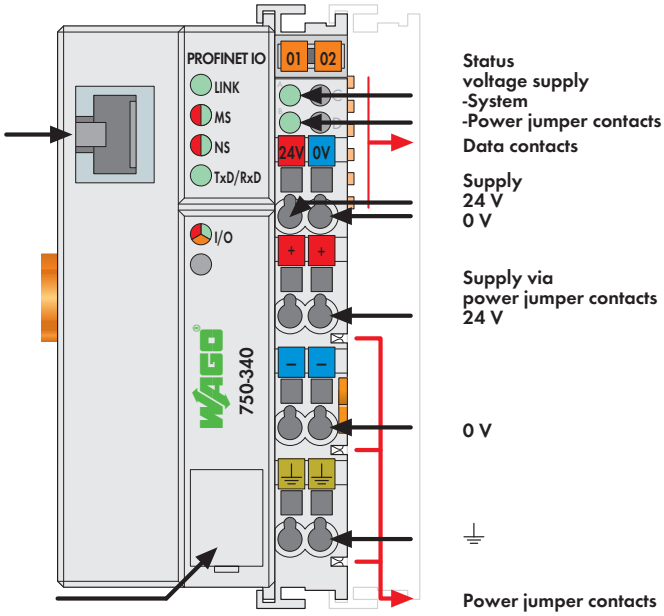

This fieldbus coupler connects the WAGO-I/O-SYSTEM as a slave to the PROFINET IO Industrial ETHERNET standard for automation.
The fieldbus coupler supports all WAGO-I/O-SYSTEM modules.

The coupler automatically configures, creating a local process image which may include analog, digital, or specialty modules. Analog and specialty module data is sent via words and/or bytes; digital data is sent bit by bit.

The fieldbus coupler is integrated into the application as a PROFINET IO device.

Description	Item No.	Pack. Unit
PROFINET IO 100 MBit	**750-340**	1

Accessories		Item No.	Pack. Unit
Miniature WSB Quick marking system			
	plain	**248-501**	5
	with marking	see Section 11	

Approvals

Conformity marking	CE
Korea Certification	
UL 508	
TÜV 07 ATEX 554086 X	I M2 Ex d I Mb,
	II 3 G Ex nA IIC T4 Gc,
	II 3 D Ex tc IIIC T135°C Dc
IECEx TUN 09.0001 X	Ex d I Mb,
	Ex nA IIC T4 Gc,
	Ex tc IIIC T135°C Dc

System Data

No. of couplers connected to Master	limited by PROFINET specification
Transmission medium	Twisted Pair S-UTP 100 Ω cat. 5
Max. length of fieldbus segment	100 m between hub station and 750-340;
	max. length of network limited by
	PROFINET specification
Baud rate	10/100 Mbit/s
Buscoupler connection	RJ-45
Protocols	PROFINET RT V2.0
	(RT Class 1);
	Conformance Class A (DCP, UDP);
	HTTP

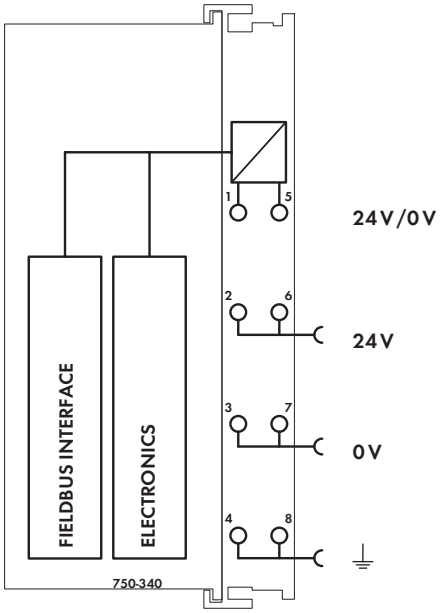

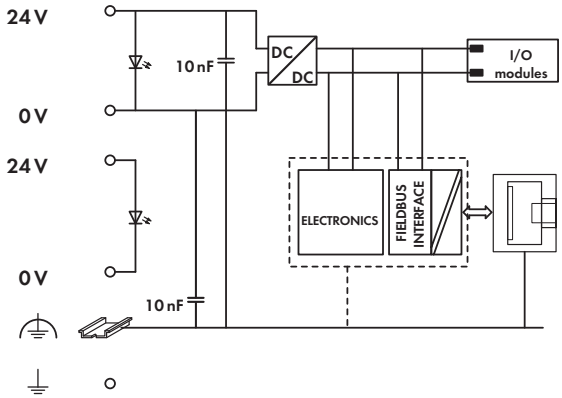

Technical Data

Number of I/O modules	64
with bus extension	128
Max. input process image	320 bytes
Max. output process image	320 bytes
Configuration	via PC
Power supply	24 V DC (-15 % ... +20 %)
Max. input current (24 V)	500 mA
Power supply efficiency	87 %
Internal current consumption (5 V)	300 mA
Total current for I/O modules (5 V)	1700 mA
Isolation	500 V system/supply
Voltage via power jumper contacts	24 V DC (-15 % ... +20 %)
Current via power jumper contacts (max.)	10 A DC

General Specifications

Operating temperature	0 °C ... +55 °C
Wire connection	CAGE CLAMP®
Cross sections	0.08 mm² ... 2.5 mm² / AWG 28 ... 14
Strip lengths	8 ... 9 mm / 0.33 in
Dimensions (mm) W x H x L	51 x 65 x 100
	Height from upper-edge of DIN 35 rail
Weight	179.5 g
Storage temperature	-25 °C ... +85 °C
Relative air humidity (no condensation)	95 %
Vibration resistance	acc. to IEC 60068-2-6
Shock resistance	acc. to IEC 60068-2-27
Degree of protection	IP20
EMC immunity of interference	acc. to EN 61000-6-2
EMC emission of interference	acc. to EN 61000-6-4

PROFINET IO Fieldbus Coupler

2-port; 100 Mbit/s; digital and analog signals

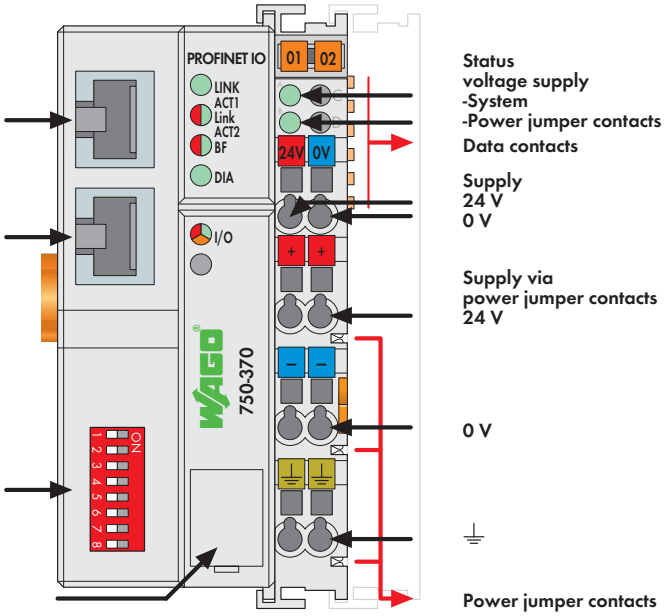

This fieldbus coupler connects to the WAGO-I/O-SYSTEM as a slave of the PROFINET IO, the open Industrial ETHERNET standard for automation.
The fieldbus coupler supports all I/O modules. The buscoupler automatically configures, creating a local process image which may include analog, digital or specialty modules. Analog and specialty module data is sent via words and/or bytes; digital data is sent bit by bit.
This buscoupler can integrate into the application as a PROFINET IO device. The buscoupler features an integrated 2-port switch, allowing easy line structure creation without requiring any additional network components.
The device name can be assigned via DCP protocol or be adjusted by a DIP switch if the protocol is not supported by the control systems.

Description	Item No.	Pack. Unit
PROFINET IO 100 MBit 2-port	**750-370**	1

Accessories		Item No.	Pack. Unit
Miniature WSB Quick marking system			
	plain	**248-501**	5
	with marking	see Section 11	

Approvals

Conformity marking	CE
Korea Certification	
UL 508	
ANSI/ISA 12.12.01	Class I, Div. 2, Grp. ABCD, T4
TÜV 07 ATEX 554086 X	I M2 Ex d I Mb, II 3 G Ex nA IIC T4 Gc, II 3 D Ex tc IIIC T135°C Dc
IECEx TUN 09.0001 X	Ex d I Mb, Ex nA IIC T4 Gc, Ex tc IIIC T135°C Dc

System Data

No. of couplers connected to Master	limited by PROFINET specification
Transmission medium	Twisted Pair S-UTP 100 Ω cat. 5
Max. length of fieldbus segment	100 m between switch and 750-370; max. length of network limited by PROFINET specification
Baud rate	10/100 Mbit/s
Buscoupler connection	2 x RJ-45
Protocols	PROFINET IO (RT Class 1); Conformance Class B (DCP, SNMP, LLDP); HTTP

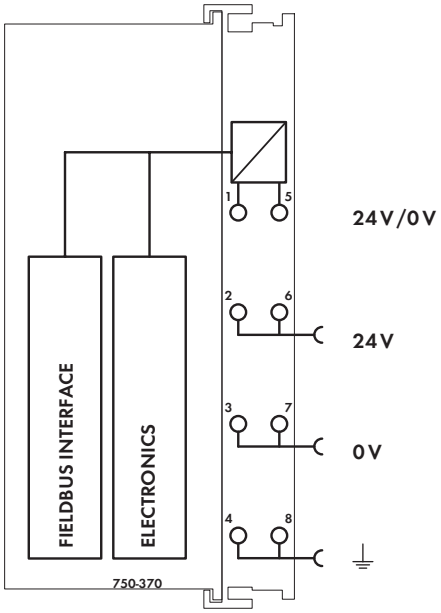

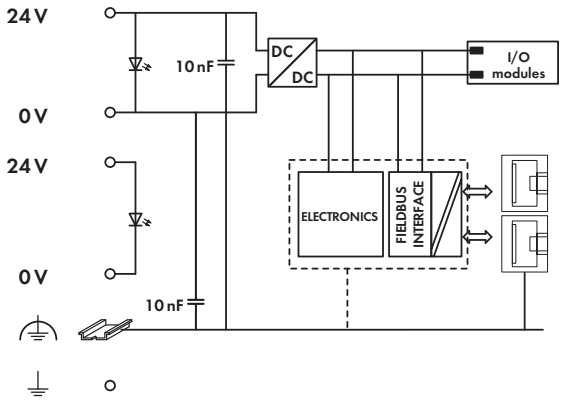

Technical Data

Number of I/O modules	64
with bus extension	128
Max. input process image	320 bytes
Max. output process image	320 bytes
Configuration	via PC
Power supply	24 V DC (-15 % ... +20 %)
Max. input current (24 V)	500 mA
Power supply efficiency	87 %
Internal current consumption (5 V)	300 mA
Total current for I/O modules (5 V)	1700 mA
Isolation	500 V system/supply
Voltage via power jumper contacts	24 V DC (-15 % ... +20 %)
Current via power jumper contacts (max.)	10 A DC

General Specifications

Operating temperature	0 °C ... +55 °C
Wire connection	CAGE CLAMP®
Cross sections	0.08 mm² ... 2.5 mm² / AWG 28 ... 14
Strip lengths	8 ... 9 mm / 0.33 in
Dimensions (mm) W x H x L	51 x 65 x 100
	Height from upper-edge of DIN 35 rail
Weight	189.5 g
Storage temperature	-25 °C ... +85 °C
Relative air humidity (no condensation)	95 %
Vibration resistance	acc. to IEC 60068-2-6
Shock resistance	acc. to IEC 60068-2-27
Degree of protection	IP20
EMC immunity of interference	acc. to EN 61000-6-2
EMC emission of interference	acc. to EN 61000-6-3

PROFINET IO advanced Fieldbus Coupler

2-port switch; 100 Mbit/s; digital, analog and complex signals

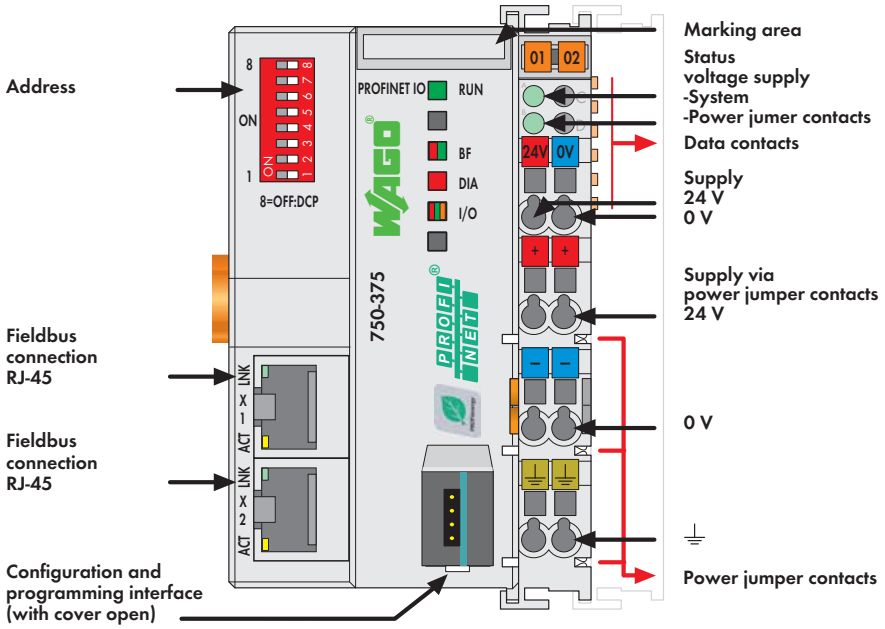

The 750-375 Fieldbus Coupler connects the WAGO-I/O-SYSTEM 750 to PROFINET IO (open, real-time industrial ETHERNET automation standard). The coupler identifies the connected I/O modules and creates local process images for maximum two IO controllers and one IO supervisor according to preset configurations. The process images may include a mixed arrangement of analog, digital or specialty modules. Analog and specialty module data is sent via words and/or bytes; digital data is sent bit by bit.
The fieldbus coupler operates as an IO device in the network. It features an integrated 2-port switch, simplifying the creation of a line structure without additional network components.
The device name can be assigned via DCP protocol or set via DIP switch.

Description	Item No.	Pack. Unit
PROFINET IO adv. 2-Port	**750-375**	1
PROFINET IO adv. 2-Port/T	**750-375/025-000**	1
Extended temperature range: -20 °C ... +60 °C		

Accessories		Item No.	Pack. Unit
Miniature WSB Quick marking system			
	plain	**248-501**	5
	with marking	see Section 11	

Approvals

Conformity marking	CE
Marine applications (versions upon request)	GL
UL 508	
ANSI/ISA 12.12.01	Class I, Div. 2, Grp. ABCD, T4

System Data

No. of couplers connected to Master	limited by PROFINET specification
Transmission medium	Twisted Pair S-UTP 100 Ω cat. 5
Max. length of fieldbus segment	100 m between hub station and 750-375; max. length of network limited by PROFINET specification
Baud rate	10 Mbit/s (ETHERNET protocols), 100 Mbit/s full duplex (PROFINET IO)
Transmission method	100Base-TX
Buscoupler connection	2 x RJ-45
PROFINET IO standard	V2.2 (conformance class C, pending)

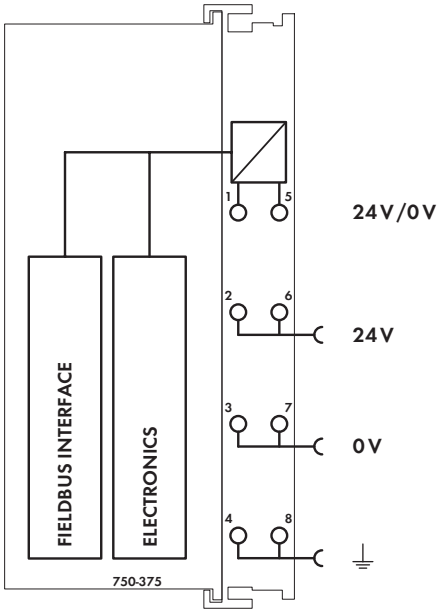

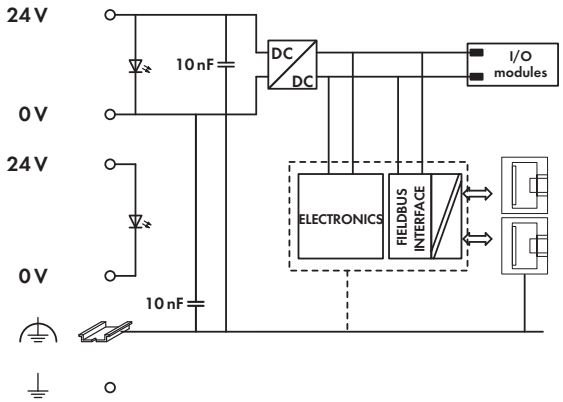

Technical Data

Number of I/O modules	64
with bus extension	250
Max. input process image	512 bytes
Max. output process image	512 bytes
Configuration	via PC
PROFINET IO features	Integrated 2-port switch;
	Auto-negotiation, Auto-MDIX;
	Isochronous real-time communication
	(pending);
	Transmission clock: 1 ms (RT),
	1, 2, 4 ms (IRT);
	Device replacement without programming
	tool; Shared device
Protocols	Topology detection / LLDP,
	Network diagnostics / SNMP / MIB-2,
	media redundancy / MRP (pending),
	Web server / HTTP
Profiles supported	PROFIsafe V2, PROFIenergy V1.0
ID code	Vendor ID: 0x011D;
	Device ID: 0x02EE;
	Coupler ID:
	0x01000177 (firmware 01, 02),
	0x02000177 (firmware 03)
Power supply	24 V DC (-25 % ... +30 %)
Input current typ. at rated load (24 V)	500 mA
Efficiency of the power supply (typ.) at	
nominal load (24 V)	90 %
Internal current consumption (5 V)	450 mA
Total current for I/O modules (5 V)	1700 mA
Isolation	500 V system/supply

General Specifications

Operating temperature	0 °C ... +55 °C
Wire connection	CAGE CLAMP®
Cross sections	0.08 mm² ... 2.5 mm² / AWG 28 ... 14
Strip lengths	8 ... 9 mm / 0.33 in
Dimensions (mm) W x H x L	62 x 65 x 100
	Height from upper-edge of DIN 35 rail
Weight	150.3 g
Storage temperature	-25 °C ... +85 °C
Relative air humidity (no condensation)	95 %
Vibration resistance	acc. to IEC 60068-2-6
Shock resistance	acc. to IEC 60068-2-27
Degree of protection	IP20
EMC immunity of interference	acc. to EN 61000-6-2, marine applications
EMC emission of interference	acc. to EN 61000-6-3, marine applications

PROFINET IO advanced ECO Fieldbus Coupler

2-port switch; 100 Mbit/s; digital, analog and complex signals

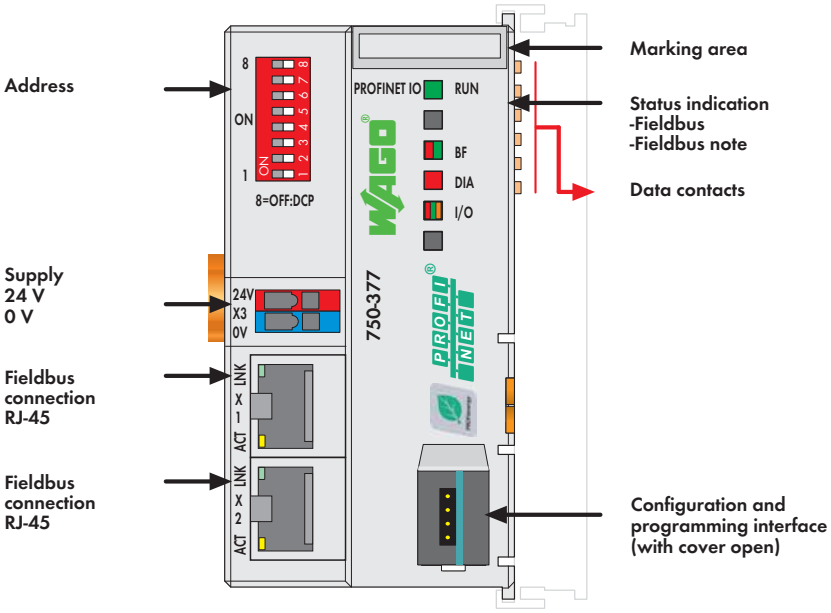

The 750-377 Fieldbus Coupler connects the WAGO-I/O-SYSTEM 750 to PROFINET IO (open, real-time industrial ETHERNET automation standard). The coupler identifies the connected I/O modules and creates local process images for one IO controller and one IO supervisor according to preset configurations. The process images may include a mixed arrangement of analog, digital or specialty modules. Analog and specialty module data is sent via words and/or bytes; digital data is sent bit by bit.
The fieldbus coupler operates as an IO device in the network. It features an integrated 2-port switch, simplifying the creation of a line structure without additional network components.
The device name can be assigned via DCP protocol or set via DIP switch.

Description	Item No.	Pack. Unit
PROFINET IO adv. ECO 2-Port	**750-377**	1
PROFINET IO adv. ECO 2-Port/T	**750-377/025-000**	1
Extended temperature range: -20 °C ... +60 °C		

Accessories		Item No.	Pack. Unit
Miniature WSB Quick marking system			
	plain	**248-501**	5
	with marking	see Section 11	

Approvals

Conformity marking	CE
Marine applications (versions upon request)	GL
UL 508	
ANSI/ISA 12.12.01	Class I, Div. 2, Grp. ABCD, T4

System Data

No. of couplers connected to Master	limited by PROFINET specification
Transmission medium	Twisted Pair S-UTP 100 Ω cat. 5
Max. length of fieldbus segment	100 m between hub station and 750-377; max. length of network limited by PROFINET specification
Baud rate	10 Mbit/s (ETHERNET protocols), 100 Mbit/s full duplex (PROFINET IO)
Transmission method	100Base-TX
Buscoupler connection	2 x RJ-45
PROFINET IO standard	V2.2 (conformance class C, pending)

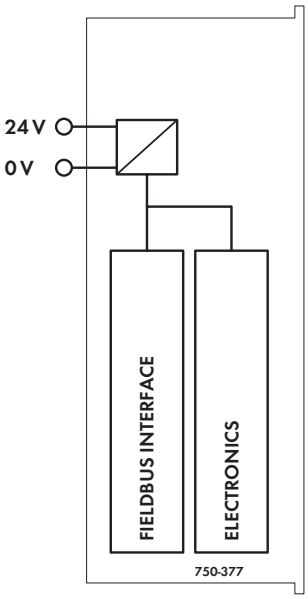

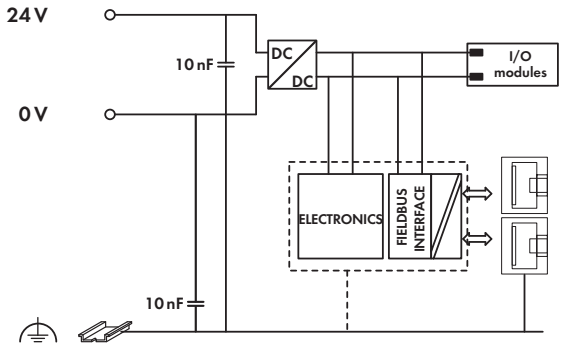

Technical Data

Number of I/O modules	64
Max. input process image	256 bytes
Max. output process image	256 bytes
Configuration	via PC
PROFINET IO features	Integrated 2-port switch; Auto-negotiation, Auto-MDIX; Isochronous real-time communication (pending); Transmission clock: 1 ms (RT), 1, 2, 4 ms (IRT); Device replacement without programming tool
Protocols	Topology detection / LLDP, Network diagnostics / SNMP / MIB-2, media redundancy / MRP (pending), Web server / HTTP
Profiles supported	PROFIsafe V2, PROFIenergy V1.0
ID code	Vendor ID: 0x011D; Device ID: 0x02EE; Coupler ID: 0x01000179 (firmware 01, 02), 0x02000179 (firmware 03)
Power supply	24 V DC (-25 % ... +30 %)
Input current typ. at rated load (24 V)	280 mA
Efficiency of the power supply (typ.) at nominal load (24 V)	90 %
Internal current consumption (5 V)	450 mA
Total current for I/O modules (5 V)	700 mA
Isolation	500 V system/supply

General Specifications

Operating temperature	0 °C ... +55 °C
Wire connection	CAGE CLAMP®
Cross sections	0.08 mm² ... 1.5 mm² / AWG 28 ... 14
Strip lengths	5 ... 6 mm / 0.22 in
Dimensions (mm) W x H x L	50 x 65 x 97
	Height from upper-edge of DIN 35 rail
Weight	107.1 g
Storage temperature	-25 °C ... +85 °C
Relative air humidity (no condensation)	95 %
Vibration resistance	acc. to IEC 60068-2-6
Shock resistance	acc. to IEC 60068-2-27
Degree of protection	IP20
EMC immunity of interference	acc. to EN 61000-6-2, marine applications
EMC emission of interference	acc. to EN 61000-6-3, marine applications

PROFIBUS DP/FMS Fieldbus Coupler

12 Mbaud; digital and analog signals

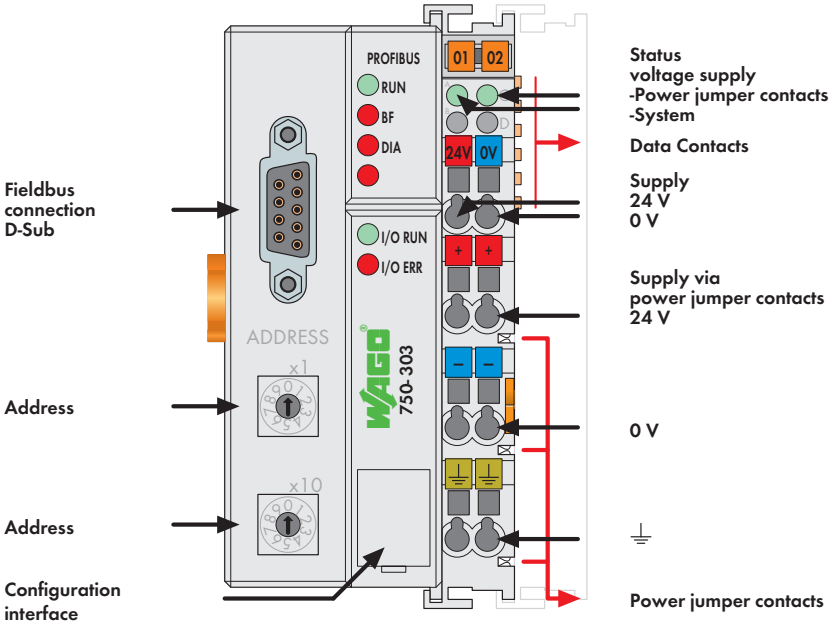

This buscoupler connects the WAGO-I/O-SYSTEM as a slave to the PROFIBUS fieldbus.

The buscoupler automatically configures, creating a local process image which may include analog, digital or specialty modules. Analog and specialty module data is sent via words and/or bytes, digital data is sent bit by bit.

PROFIBUS stores the process image in the corresponding Master control (PLC, PC or NC).

The local process image is divided into two data zones containing the data received and the data to be sent. The process data can be sent via the PROFIBUS fieldbus to the PLC, PC or NC for further processing, and received from the field via PROFIBUS.

The data of the analog modules is stored in the process image which is created automatically according to the order in which the modules are connected to the buscoupler. The bits of the digital modules are sent byte by byte and added to the analog data. If the amount of digital information exceeds 8 bits, the buscoupler automatically starts with a new byte.

When implementing new installations, please consider 750-333 PROFIBUS DP fieldbus coupler with extended functions.
Notice: GSD files required!

Description	Item No.	Pack. Unit
PROFIBUS DP/FMS 12 MBd	**750-303**	1

Accessories		Item No.	Pack. Unit
GSD files	Download: www.wago.com		
Miniature WSB Quick marking system			
	plain	**248-501**	5
	with marking	see Section 11	

Standards and Approvals

Standard	EN 50170
Certification	PNO
Conformity marking	CE
Korea Certification	
Marine applications	ABS, BV, DNV, GL, KR, LR, NKK, PRS, RINA
UL 508	
ANSI/ISA 12.12.01	Class I, Div. 2, Grp. ABCD, T4
TÜV 07 ATEX 554086 X	I M2 Ex d I Mb,
	II 3 G Ex nA IIC T4 Gc,
	II 3 D Ex tc IIIC T135°C Dc
IECEx TUN 09.0001 X	Ex d I Mb,
	Ex nA IIC T4 Gc,
	Ex tc IIIC T135°C Dc

System Data

No. of couplers connected to Master	96 with repeater
Max. no. of I/O points	approx. 6000 (depends on master)
Transmission medium	Cu cable acc. to EN 50170
Max. length of fieldbus segment	100 m ... 1200 m
	(depends on baud rate/cable)
Baud rate	9.6 Kbaud ... 12 Mbaud
Transmission time	typ. 1 ms (10 couplers; 32 digital I/Os per
	coupler at 12 Mbaud) max. 3.3 ms
Buscoupler connection	1 x D-Sub 9; socket

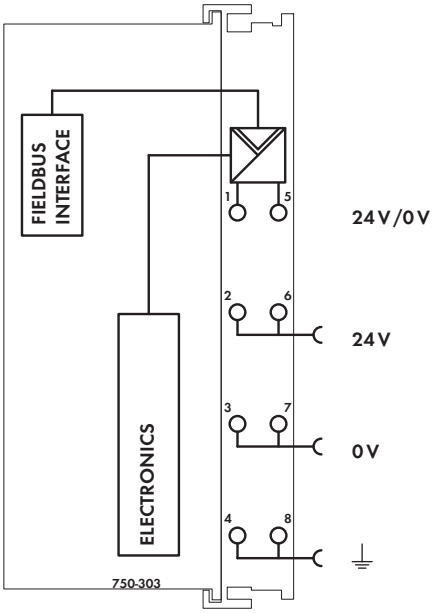

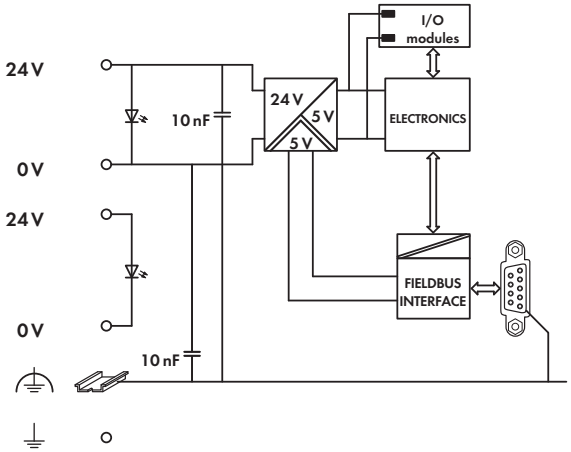

Technical Data

Number of I/O modules	64
Max. input process image	128 bytes
Max. output process image	128 bytes
	up version 05xx, max. 64 bytes
Configuration	via PC or PLC
Power supply	24 V DC (-25 % ... +30 %)
Max. input current (24 V)	500 mA
Power supply efficiency	87 %
Internal current consumption (5 V)	350 mA
Total current for I/O modules (5 V)	1650 mA
Isolation	500 V system/supply
Voltage via power jumper contacts	24 V DC (-25 % ... +30 %)
Current via power jumper contacts (max.)	10 A DC

General Specifications

Operating temperature	0 °C ... +55 °C
Wire connection	CAGE CLAMP®
Cross sections	0.08 mm² ... 2.5 mm² / AWG 28 ... 14
Strip lengths	8 ... 9 mm / 0.33 in
Dimensions (mm) W x H x L	51 x 65 x 100
	Height from upper-edge of DIN 35 rail
Weight	185.2 g
Storage temperature	-25 °C ... +85 °C
Relative air humidity (no condensation)	95 %
Vibration resistance	acc. to IEC 60068-2-6
Shock resistance	acc. to IEC 60068-2-27
Degree of protection	IP20
EMC immunity of interference	acc. to EN 61000-6-2, marine applications
EMC emission of interference	acc. to EN 61000-6-4, marine applications

PROFIBUS DP/V1 Fieldbus Coupler

12 Mbaud; digital and analog signals

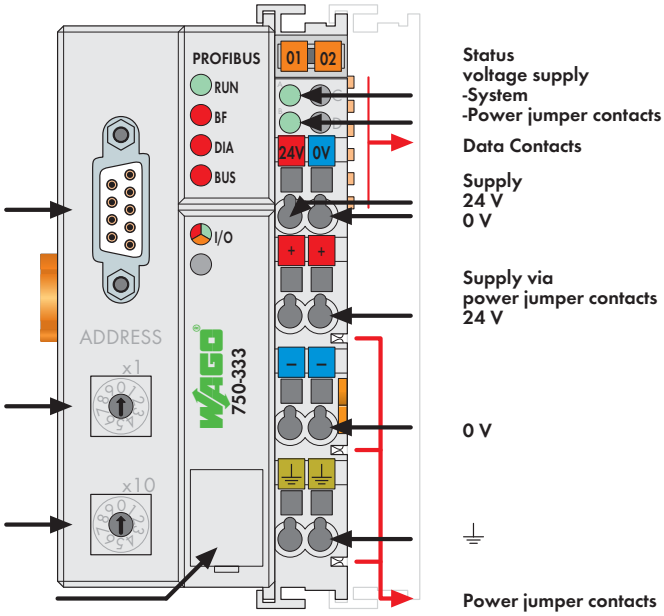

This buscoupler interfaces the I/O modules of the WAGO-I/O-SYSTEM to PROFIBUS DP.

When initializing, the buscoupler determines the module structure of the node, to create the process image in PROFIBUS. In order to optimize addresses, the I/O modules with a bit width smaller than 8 are grouped in one byte.

Notice: GSD files required

It is furthermore possible to deactive I/O modules and to modify the image of the node according to the connected signals without having to modify the existing application.

The diagnosis concept is based on diagnostics according to the EN 50170 standard. Therefore the programming of modules is not necessary to interpret the diagnostic information from each manufacturer.

Description	Item No.	Pack. Unit
PROFIBUS DP/V1 12MBd	**750-333**	1
PROFIBUS DP/V1/T	**750-333/025-000**	1
Extended temperature range: -20 °C ... +60 °C		

Accessories		Item No.	Pack. Unit
GSD files	Download: www.wago.com		
Miniature WSB Quick marking system			
	plain	**248-501**	5
	with marking	see Section 11	

Standards and Approvals	
Standard	EN 50170
Conformity marking	CE
Korea Certification	
Marine applications (versions upon request)	ABS, BV, DNV, GL, KR, LR, NKK, PRS, RINA
UL 508	
ANSI/ISA 12.12.01	Class I, Div. 2, Grp. ABCD, T4
TÜV 12.1297 X (Brazil)	Ex nA IIC T4 Gc
TÜV 07 ATEX 554086 X	I M2 Ex d I Mb, II 3 G Ex nA IIC T4 Gc, II 3 D Ex tc IIIC T135°C Dc
IECEx TUN 09.0001 X	Ex d I Mb, Ex nA IIC T4 Gc, Ex tc IIIC T135°C Dc

System Data	
No. of couplers connected to Master	96 with repeater
Max. no. of I/O points	approx. 6000 (depends on master)
Transmission medium	Cu cable acc. to EN 50170
Max. length of fieldbus segment	100 m ... 1200 m (depends on baud rate/cable)
Baud rate	9.6 Kbaud ... 12 Mbaud
Transmission time	typ. 1 ms (10 couplers; 32 digital I/Os per coupler at 12 Mbaud) max. 3.3 ms
Buscoupler connection	1 x D-Sub 9; socket

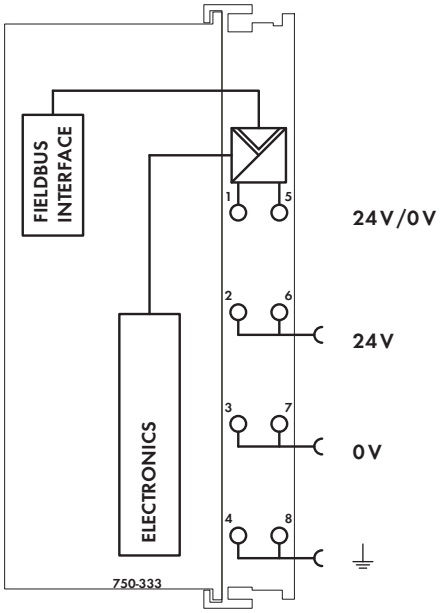

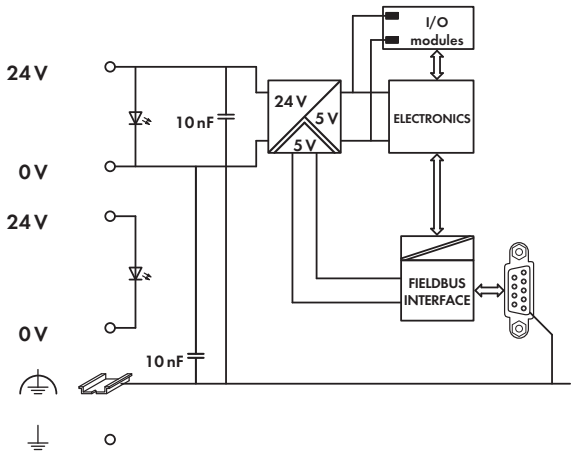

Technical Data

Number of I/O modules	63
Max. input process image	244 bytes
Max. output process image	244 bytes
Configuration	via PC or PLC
Power supply	24 V DC (-25 % ... +30 %)
Max. input current (24 V)	500 mA
Power supply efficiency	87 %
Internal current consumption (5 V)	200 mA
Total current for I/O modules (5 V)	1800 mA
Isolation	500 V system/supply
Voltage via power jumper contacts	24 V DC (-25 % ... +30 %)
Current via power jumper contacts (max.)	10 A DC

General Specifications

Operating temperature	0 °C ... +55 °C
Wire connection	CAGE CLAMP®
Cross sections	0.08 mm² ... 2.5 mm² / AWG 28 ... 14
Strip lengths	8 ... 9 mm / 0.33 in
Dimensions (mm) W x H x L	51 x 65 x 100
	Height from upper-edge of DIN 35 rail
Weight	183.1 g
Storage temperature	-25 °C ... +85 °C
Relative air humidity (no condensation)	95 %
Vibration resistance	acc. to IEC 60068-2-6
Shock resistance	acc. to IEC 60068-2-27
Degree of protection	IP20
EMC immunity of interference	acc. to EN 61000-6-2, marine applications
EMC emission of interference	acc. to EN 61000-6-4, marine applications

PROFIBUS DP ECO Fieldbus Coupler

12 Mbaud; digital and analog signals

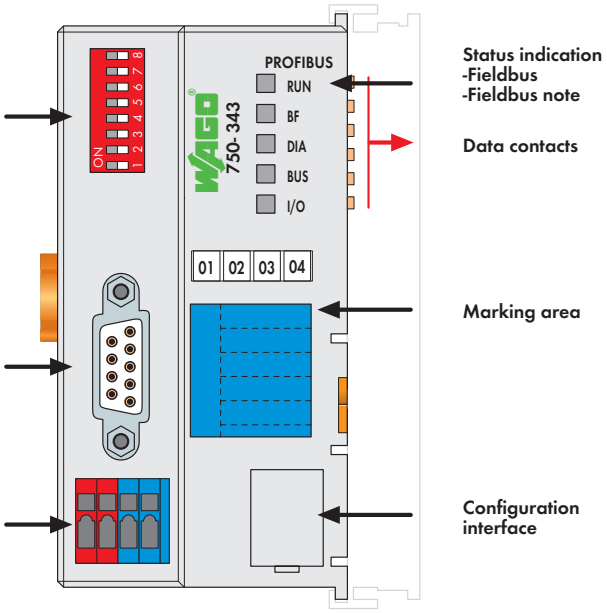

The ECO fieldbus coupler is designed for applications with a reduced scale I/O requirement. Using digital only process data or small amounts of analogs, while retaining all of the choice that's offered by the Series 750 I/O.

The coupler has an integrated supply terminal for the system voltage. The field power jumper contacts are supplied via a separate supply module.

When initializing, the buscoupler determines the module structure of the node, to create the process image in PROFIBUS. In order to optimize addresses, the I/O modules with a bit width smaller than 8 are grouped in one byte.

Notice: GSD files required

It is furthermore possible to deactive I/O modules and to modify the image of the node according to the connected signals without having to modify the existing application.

The diagnosis concept is based on diagnostics according to the EN 50170 standard. Therefore the programming of modules is not necessary to interpret the diagnostic information from each manufacturer.

Description	Item No.	Pack. Unit
PROFIBUS DP ECO 12 MBd	**750-343**	1

Accessories		Item No.	Pack. Unit
GSD files	Download: www.wago.com		
Miniature WSB Quick marking system			
	plain	**248-501**	5
	with marking	see Section 11	

Standards and Approvals

Standard	EN 50170
Conformity marking	CE
Korea Certification	
Marine applications	ABS, BV, DNV, GL, KR, LR, NKK, PRS, RINA
UL 508	
ANSI/ISA 12.12.01	Class I, Div. 2, Grp. ABCD, T4
TÜV 12.1297 X (Brazil)	Ex nA IIC T4 Gc
TÜV 07 ATEX 554086 X	I M2 Ex d I Mb, II 3 G Ex nA IIC T4 Gc, II 3 D Ex tc IIIC T135°C Dc
IECEx TUN 09.0001 X	Ex d I Mb, Ex nA IIC T4 Gc, Ex tc IIIC T135°C Dc

System Data

No. of couplers connected to Master	125 with repeater
Max. no. of I/O points	approx. 6000 (depends on master)
Transmission medium	Cu cable acc. to EN 50170
Max. length of fieldbus segment	100 m ... 1200 m (depends on baud rate/cable)
Baud rate	9.6 Kbaud ... 12 Mbaud
Transmission time	typ. 1 ms (10 couplers; 32 digital I/Os per coupler at 12 Mbaud) max. 3.3 ms
Buscoupler connection	1 x D-Sub 9; socket

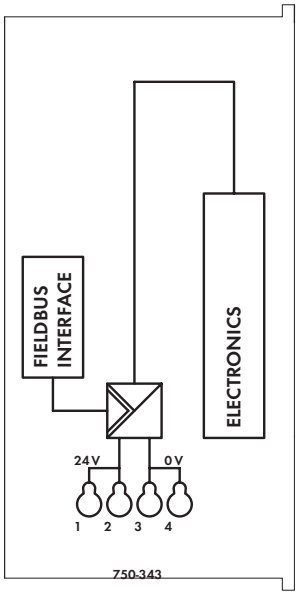

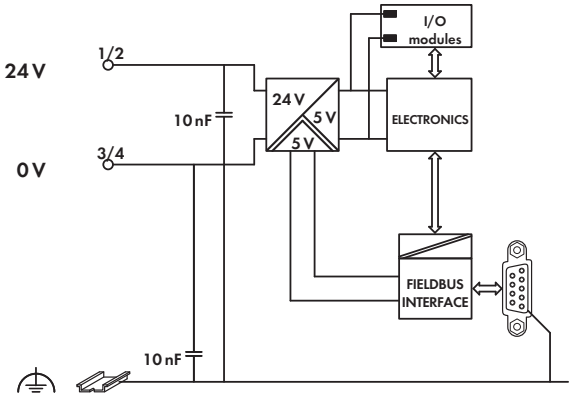

Technical Data

Number of I/O modules	63
Max. input process image	32 bytes
Max. output process image	32 bytes
Configuration	via PC or PLC
Power supply	24 VDC (-25 % ... +30 %)
Input current typ. at rated load (24 V)	260 mA
Efficiency of the power supply (typ.) at nominal load (24 V)	80 %
Internal current consumption (5 V)	350 mA
Total current for I/O modules (5 V)	650 mA

General Specifications

Operating temperature	0 °C ... +55 °C
Wire connection	CAGE CLAMP®
Cross sections	0.08 mm² ... 1.5 mm² / AWG 28 ... 16
Strip lengths	5 ... 6 mm / 0.22 in
Dimensions (mm) W x H x L	50 x 65 x 97
	Height from upper-edge of DIN 35 rail
Weight	110.4 g
Storage temperature	-25 °C ... +85 °C
Relative air humidity (no condensation)	95 %
Vibration resistance	acc. to IEC 60068-2-6
Shock resistance	acc. to IEC 60068-2-27
Degree of protection	IP20
EMC immunity of interference	acc. to EN 61000-6-2, marine applications
EMC emission of interference	acc. to EN 61000-6-4, marine applications

PROFIBUS DP Fieldbus Coupler

1.5 Mbaud; digital and analog signals

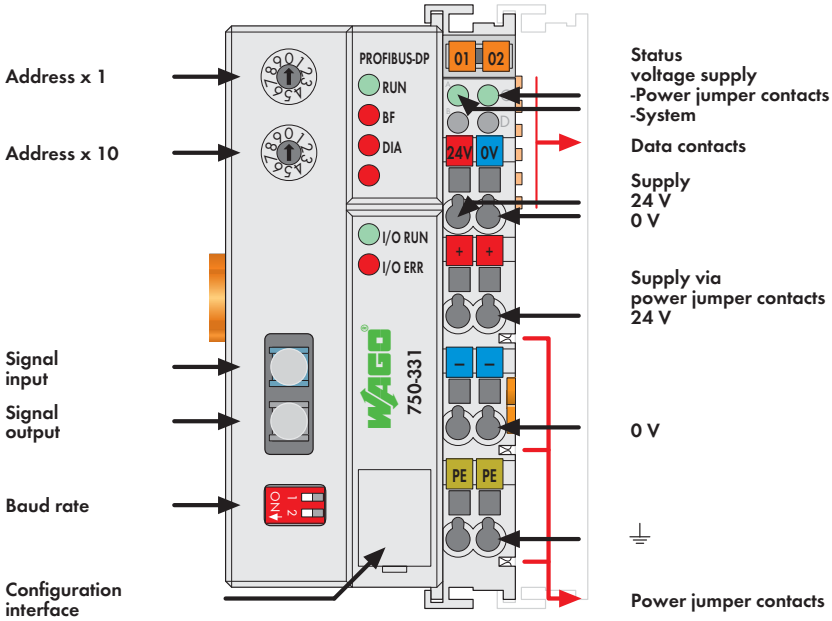

This buscoupler connects the WAGO-I/O-SYSTEM as a slave to the PROFIBUS DP fieldbus.

The buscoupler automatically configures, creating a local process image which may include analog, digital or specialty modules. Analog and specialty module data is sent via words and/or bytes, digital data is sent bit by bit.

The local process image is divided into two data zones containing the data received and the data to be sent. The process data can be sent via the PROFIBUS DP fieldbus to the PLC, PC or NC for further processing, and received from the field via PROFIBUS DP.

Notice: GSD files required

The data of the analog modules is stored in the process image which is created automatically according to the order in which the modules are connected to the buscoupler. The bits of the digital modules are sent byte by byte and added to the analog data. If the amount of digital information exceeds 8 bits, the buscoupler automatically starts with a new byte.

For the operation of a PROFIBUS DP coupler with fiber optic cable connection, an interface module is also necessary to transfer RS-485 on a fiber optic ring. A subring can contain up to 10 other fiber optic modules. The baud rate is set via two DIP switches on the buscoupler.

Description	Item No.	Pack. Unit
PROFIBUS DP 1.5 MBd / Opt. Fiber	**750-331**	1

Accessories		Item No.	Pack. Unit
GSD files	Download: www.wago.com		
Miniature WSB Quick marking system			
	plain	**248-501**	5
	with marking	see Section 11	

Standards and Approvals

Standard	EN 50170
Conformity marking	CE
Korea Certification	
UL 508	
DEKRA 11 ATEX 0203 X	II 3 G Ex nA II T4

System Data

No. of couplers connected to Master	10 in the subring
Transmission medium	APF (plastic) fiber (1000µm)
Max. length of fieldbus segment	1 m ... 25 m
Topology	Subring, single-fiber ring
Baud rate	93.75 Kbaud ... 1500 Kbaud
Buscoupler connection	HP Simplex fiber optic plug (included)

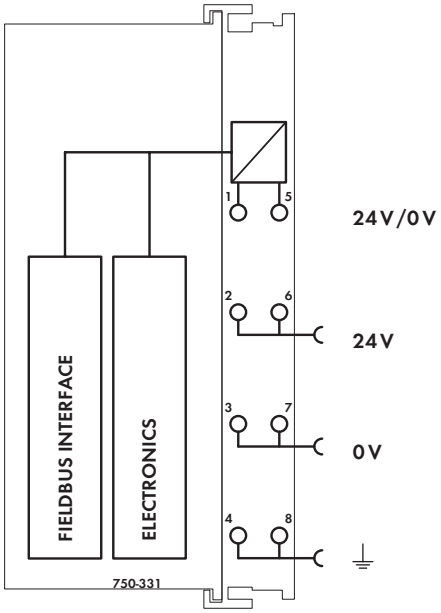

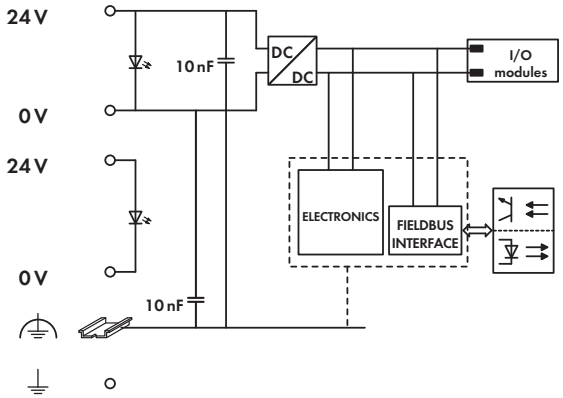

Technical Data

Number of I/O modules	64
Max. input process image	128 bytes
Max. output process image	128 bytes
Configuration	via PC or PLC
Power supply	24 V DC (-15 % ... +20 %)
Max. input current (24 V)	500 mA
Power supply efficiency	87 %
Internal current consumption (5 V)	350 mA
Total current for I/O modules (5 V)	1650 mA
Isolation	500 V system/supply
Voltage via power jumper contacts	24 V DC (-15 % ... +20 %)
Current via power jumper contacts (max.)	10 A DC

General Specifications

Operating temperature	0 °C ... +55 °C
Wire connection	CAGE CLAMP®
Cross sections	0.08 mm² ... 2.5 mm² / AWG 28 ... 14
Strip lengths	8 ... 9 mm / 0.33 in
Dimensions (mm) W x H x L	51 x 65 x 100
	Height from upper-edge of DIN 35 rail
Weight	187 g
Storage temperature	-25 °C ... +85 °C
Relative air humidity (no condensation)	95 %
Vibration resistance	acc. to IEC 60068-2-6
Shock resistance	acc. to IEC 60068-2-27
Degree of protection	IP20
EMC immunity of interference	acc. to EN 61000-6-2
EMC emission of interference	acc. to EN 61000-6-4

DIP Switches

Baud rate	93.75 kBd / S1 = off; S2 = off
	187.5 kBd / S1 = off; S2 = on
	500 kBd / S1 = on; S2 = off
	1500 kBd / S1 = on; S2 = on

ETHERNET Fieldbus Coupler

10/100 Mbit/s; digital and analog signals

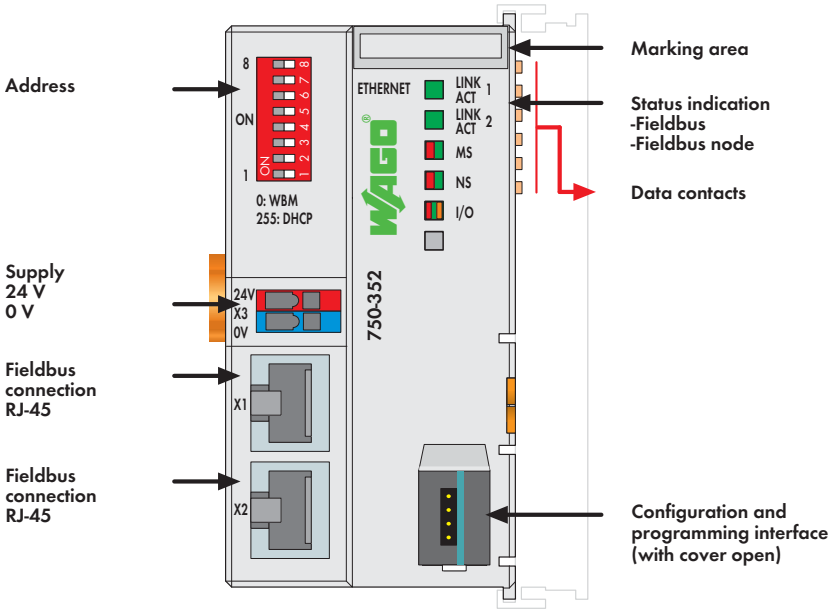

The 750-352 ETHERNET Fieldbus Coupler connects ETHERNET to the modular WAGO-I/O-SYSTEM.

The fieldbus coupler automatically configures, creating a local process image which may include analog, digital or specialty modules. Analog and specialty module data is sent via words and/or bytes; digital data is sent bit by bit.

Two ETHERNET interfaces and an integrated switch allow the fieldbus to be wired in a line topology. This eliminates additional network devices such as switches or hubs. Both interfaces support Auto-Negotiation and Auto-MDI(X).

The DIP switch configures the last byte of the IP address and may be used for IP address assignment (DHCP, BootP, static).

The coupler is designed for fieldbus communication in both Ethernet/IP and MODBUS networks. It also supports a wide variety of standard ETHERNET protocols (e.g., HTTP, BootP, DHCP, DNS, SNMP, FTP).
An integrated Web server provides configuration and status information to the coupler.

The coupler has an integrated supply terminal for the system voltage. The field power jumper contacts are supplied via a separate supply module.

Description	Item No.	Pack. Unit
ETHERNET Coupler	**750-352**	1

Accessories		Item No.	Pack. Unit
Miniature WSB Quick marking system			
	plain	**248-501**	5
	with marking	see Section 11	

Approvals

Conformity marking	CE
Korea Certification	
Marine applications	ABS, BV, DNV, GL, KR, LR, NKK, PRS, RINA
UL 508	
ANSI/ISA 12.12.01	Class I, Div. 2, Grp. ABCD, T4
TÜV 07 ATEX 554086 X	I M2 Ex d I Mb, II 3 G Ex nA IIC T4 Gc, II 3 D Ex tc IIIC T135°C Dc
IECEx TUN 09.0001 X	Ex d I Mb, Ex nA IIC T4 Gc, Ex tc IIIC T135°C Dc

System Data

No. of couplers connected to Master	limited by ETHERNET specification
Transmission medium	Twisted Pair S-UTP 100 Ω, Cat 5; Max. line length: 100 m
Baud rate	10/100 Mbit/s
Transmission performance	Class D acc. to EN 50173
Buscoupler connection	2 x RJ-45
Protocols	EtherNet/IP, MODBUS/TCP (UDP), HTTP, BootP, DHCP, DNS, FTP, SNMP

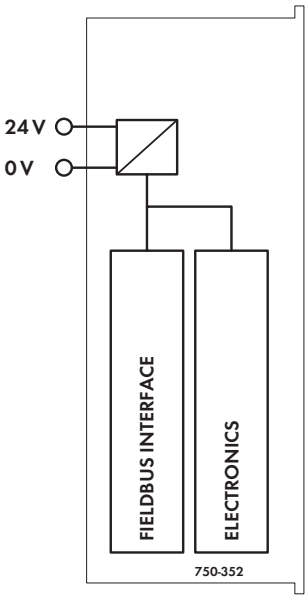

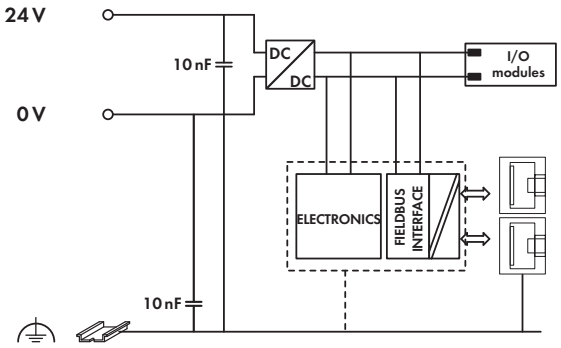

Technical Data

Number of I/O modules	64
with bus extension	250
Max. input process image	1020 words
Max. output process image	1020 words
Configuration	via PC
Power supply	24 V DC (-25 % ... +30 %)
Input current typ. at rated load (24 V)	280 mA
Efficiency of the power supply (typ.) at	
nominal load (24 V)	90 %
Internal current consumption (5 V)	450 mA
Total current for I/O modules (5 V)	700 mA
Isolation	500 V system/supply

General Specifications

Operating temperature	0 °C ... +55 °C
Wire connection	CAGE CLAMP®
Cross sections	0.08 mm² ... 1.5 mm² / AWG 28 ... 14
Strip lengths	5 ... 6 mm / 0.22 in
Dimensions (mm) W x H x L	50 x 65 x 97
	Height from upper-edge of DIN 35 rail
Weight	112 g
Storage temperature	-25 °C ... +85 °C
Relative air humidity (no condensation)	95 %
Vibration resistance	acc. to IEC 60068-2-6
Shock resistance	acc. to IEC 60068-2-27
Degree of protection	IP20
EMC immunity of interference	acc. to EN 61000-6-2, marine applications
EMC emission of interference	acc. to EN 61000-6-3, marine applications

ETHERNET TCP/IP Fieldbus Coupler

10 Mbit/s; digital and analog signals

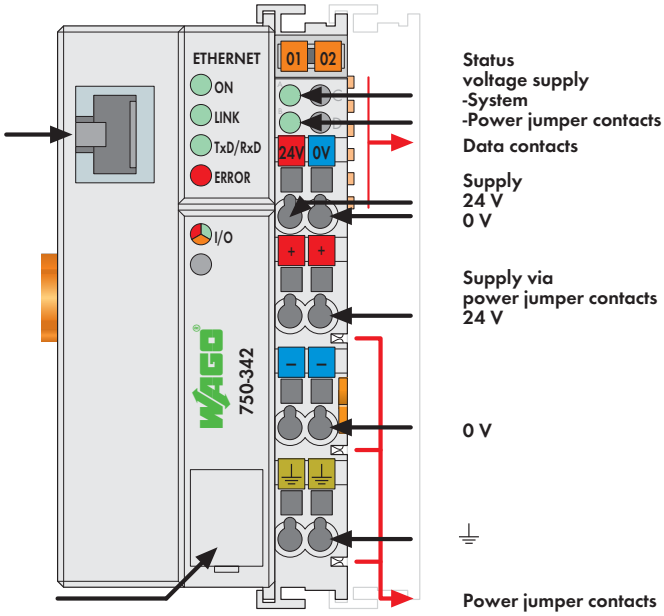

The ETHERNET TCP/IP fieldbus coupler supports a number of network protocols to send process data via ETHERNET TCP/IP. By observing the relevant IT standards, connection to existing local or global networks (LAN, Internet) is possible without any problem.
Using ETHERNET as a fieldbus makes universal data transmission between the factory and the office possible. Moreover, the ETHERNET TCP/IP fieldbus coupler offers remote maintenance, i.e. processes can be controlled regardless of the location.
Process data exchange is done using the MODBUS/TCP protocol. The buscoupler supports all I/O modules and automatically configures, creating a local process image.
The HTML pages that are stored in the fieldbus coupler allow access to information on configuration, status, or I/O data of the ETHERNET TCP/IP fieldbus coupler. Only a standard WEB browser is required.
Dynamic configuration of the IP addresses via a BootP server provides a flexible and easy way to configure the network.

Description	Item No.	Pack. Unit
ETHERNET TCP/IP 10 MBit	**750-342**	1

Accessories		Item No.	Pack. Unit
Miniature WSB Quick marking system			
	plain	**248-501**	5
	with marking	see Section 11	

Approvals

Conformity marking	CE
Korea Certification	
Marine applications	ABS, BV, DNV, GL, KR, LR, NKK, PRS, RINA
UL 508	
ANSI/ISA 12.12.01	Class I, Div. 2, Grp. ABCD, T4
TÜV 12.1297 X (Brazil)	Ex nA IIC T4 Gc
TÜV 07 ATEX 554086 X	I M2 Ex d I Mb, II 3 G Ex nA IIC T4 Gc, II 3 D Ex tc IIIC T135°C Dc
IECEx TUN 09.0001 X	Ex d I Mb, Ex nA IIC T4 Gc, Ex tc IIIC T135°C Dc

System Data

No. of couplers connected to Master	limited by ETHERNET specification
Transmission medium	Twisted Pair S-UTP 100 Ω cat. 5
Max. length of fieldbus segment	100 m between hub station and 750-342; max. length of network limited by ETHERNET specification
Baud rate	10 Mbit/s
Buscoupler connection	RJ-45
Protocols	MODBUS/TCP, HTTP, BootP, MODBUS/UDP

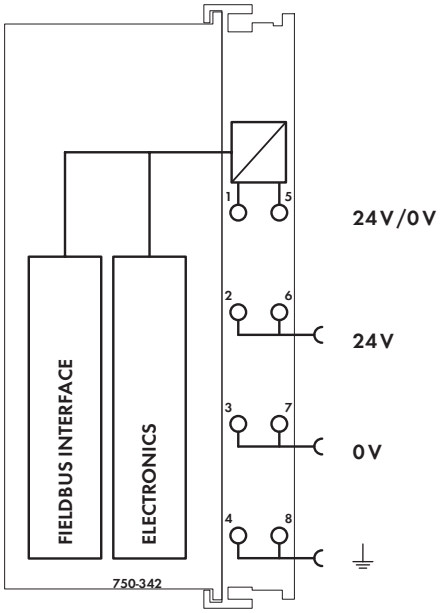

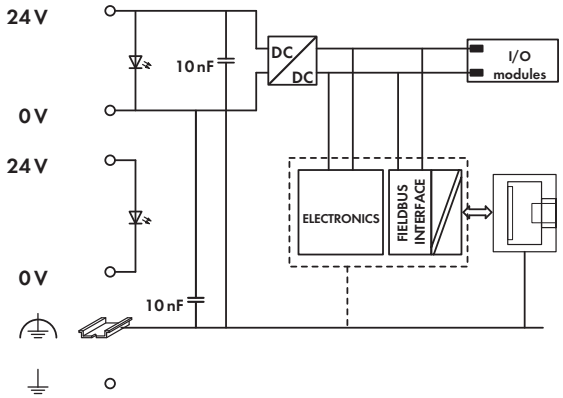

Technical Data

Number of I/O modules	64
Max. input process image	512 bytes
Max. output process image	512 bytes
Max. number of socket connections	1 HTTP; 3 MODBUS/TCP
Power supply	24 V DC (-25 % ... +30 %)
Max. input current (24 V)	500 mA
Power supply efficiency	87 %
Internal current consumption (5 V)	200 mA
Total current for I/O modules (5 V)	1800 mA
Isolation	500 V system/supply
Voltage via power jumper contacts	24 V DC (-25 % ... +30 %)
Current via power jumper contacts (max.)	10 A DC

General Specifications

Operating temperature	0 °C ... +55 °C
Wire connection	CAGE CLAMP®
Cross sections	0.08 mm² ... 2.5 mm² / AWG 28 ... 14
Strip lengths	8 ... 9 mm / 0.33 in
Dimensions (mm) W x H x L	51 x 65 x 100
	Height from upper-edge of DIN 35 rail
Weight	197 g
Storage temperature	-25 °C ... +85 °C
Relative air humidity (no condensation)	95 %
Vibration resistance	acc. to IEC 60068-2-6
Shock resistance	acc. to IEC 60068-2-27
Degree of protection	IP20
EMC immunity of interference	acc. to EN 61000-6-2, marine applications
EMC emission of interference	acc. to EN 61000-6-4, marine applications

EtherCAT Fieldbus Coupler

100 Mbit/s; digital and analog signals

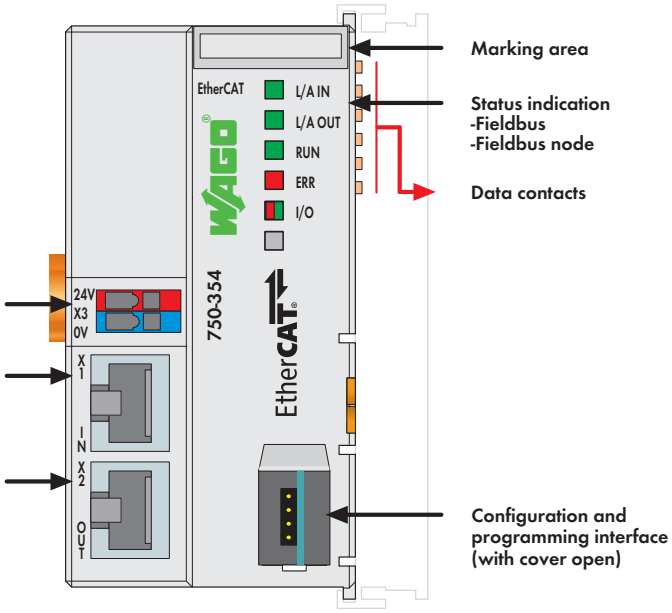

The 750-354 EtherCAT Fieldbus Coupler connects EtherCAT to the modular WAGO-I/O-SYSTEM.
The fieldbus coupler automatically configures, creating a local process image which may include analog, digital or specialty modules. Analog and specialty module data is sent via words and/or bytes; digital data is sent bit by bit.

The "upper" EtherCAT interface connects the coupler to the network.
The "lower" RJ-45 socket connects additional EtherCAT devices to the same line.

EtherCAT® (Ethernet Control Automation Technology) is a real-time ETHERNET solution designed for industrial automation applications and characterized by high performance, flexible topology and simple configuration. With EtherCAT®, the costly ETHERNET star topology can be replaced with a simple line or tree structure.

Description	Item No.	Pack. Unit
EtherCAT® Coupler	**750-354**	1

Accessories		Item No.	Pack. Unit
Miniature WSB Quick marking system			
	plain	**248-501**	5
	with marking	see Section 11	

Approvals

Conformity marking	CE
Korea Certification	
UL 508	
ANSI/ISA 12.12.01	Class I, Div. 2, Grp. ABCD, T4
TÜV 07 ATEX 554086 X	I M2 Ex d I Mb, II 3 G Ex nA IIC T4 Gc, II 3 D Ex tc IIIC T135°C Dc
IECEx TUN 09.0001 X	Ex d I Mb, Ex nA IIC T4 Gc, Ex tc IIIC T135°C Dc

System Data

No. of couplers connected to Master	limited by EtherCAT specification
Transmission medium	Shielded twisted pair S/FTP, F/FTP or SF/FTP; 100 Ω, Cat 6
Baud rate	100 Mbit/s
Transmission performance	Class D acc. to EN 50173-1
Buscoupler connection	2 x RJ-45
Protocols	EtherCAT (direct mode)

EtherCAT® is regristered trademark and patented technology, licensed by Beckhoff Automation GmbH, Germany.

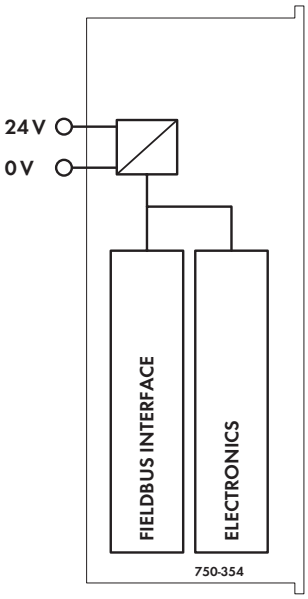

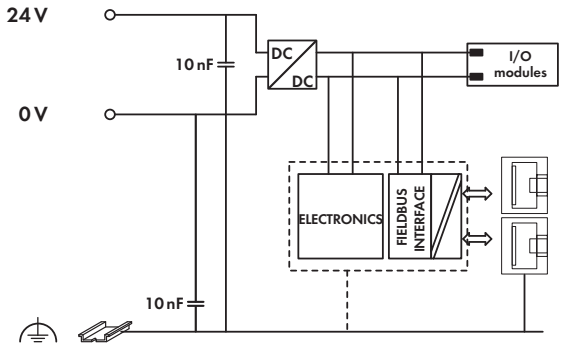

Technical Data

Number of I/O modules	64
Max. input process image	1024 bytes
Max. output process image	1024 bytes
Configuration	via PC
Power supply	24 V DC (-25 % ... +30 %)
Input current typ. at rated load (24 V)	250 mA
Efficiency of the power supply (typ.) at nominal load (24 V)	85 %
Internal current consumption (5 V)	300 mA
Total current for I/O modules (5 V)	700 mA
Isolation	500 V system/supply

General Specifications

Operating temperature	0 °C ... +55 °C
Wire connection	CAGE CLAMP®
Cross sections	0.08 mm² ... 1.5 mm² / AWG 28 ... 14
Strip lengths	5 ... 6 mm / 0.22 in
Dimensions (mm) W x H x L	50 x 65 x 97
	Height from upper-edge of DIN 35 rail
Weight	152 g
Storage temperature	-25 °C ... +85 °C
Relative air humidity (no condensation)	95 %
Vibration resistance	acc. to IEC 60068-2-6
Shock resistance	acc. to IEC 60068-2-27
Degree of protection	IP20
EMC immunity of interference	acc. to EN 61000-6-2
EMC emission of interference	acc. to EN 61000-6-3

EtherCAT® Fieldbus Coupler, ID Switch

100 Mbit/s; digital and analog signals

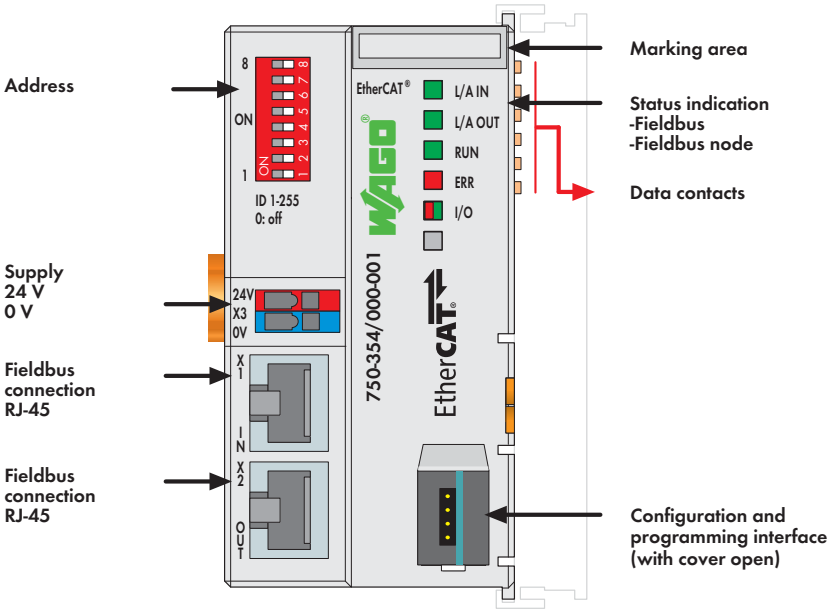

The 750-354 EtherCAT® Fieldbus Coupler connects EtherCAT® to the modular WAGO-I/O-SYSTEM.
The fieldbus coupler automatically configures, creating a local process image which may include analog, digital or specialty modules. Analog and specialty module data is sent via words and/or bytes; digital data is sent bit by bit.

The upper EtherCAT® interface connects the coupler to the network. The lower RJ-45 socket connects additional EtherCAT® devices to the same line.

EtherCAT® (Ethernet Control Automation Technology) is a real-time ETHERNET solution designed for industrial automation applications and characterized by high performance, flexible topology and simple configuration. With EtherCAT®, the costly ETHERNET star topology can be replaced with a simple line or tree structure.
The address selection switch is used to set an Explicit Device ID (EDI), which allows a fixed ID to be assigned to an EtherCAT® slave.

Description	Item No.	Pack. Unit
EtherCAT® Fieldbus Coupler, ID Switch	**750-354/000-001**	1

Accessories		Item No.	Pack. Unit
Miniature WSB Quick marking system			
	plain	**248-501**	5
	with marking	see Section 11	

Approvals

Conformity marking	CE
Marine applications	GL
UL 508	
ANSI/ISA 12.12.01	Class I, Div. 2, Grp. ABCD, T4

System Data

No. of couplers connected to Master	limited by EtherCAT specification
Transmission medium	Shielded twisted pair
	S/FTP, F/FTP or SF/FTP;
	100 Ω, Cat 6
Baud rate	100 Mbit/s
Transmission performance	Class D acc. to EN 50173-1
Buscoupler connection	2 x RJ-45
Protocols	EtherCAT (direct mode)

EtherCAT® is regristered trademark and patented technology, licensed by Beckhoff Automation GmbH, Germany.

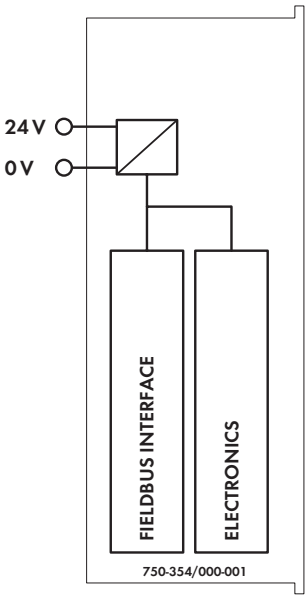

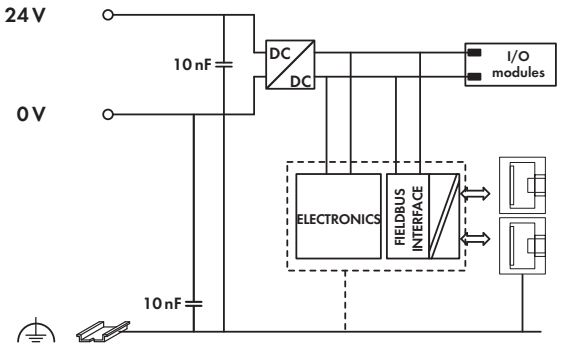

Technical Data

Number of I/O modules	64
Max. input process image	1024 bytes
Max. output process image	1024 bytes
Configuration	via PC
Power supply	24 V DC (-25 % ... +30 %)
Input current typ. at rated load (24 V)	250 mA
Efficiency of the power supply (typ.) at nominal load (24 V)	85 %
Internal current consumption (5 V)	300 mA
Total current for I/O modules (5 V)	700 mA
Isolation	500 V system/supply

General Specifications

Operating temperature	0 °C ... +55 °C
Wire connection	CAGE CLAMP®
Cross sections	0.08 mm² ... 2.5 mm² / AWG 28 ... 14
Strip lengths	8 ... 9 mm / 0.33 in
Dimensions (mm) W x H x L	65 x 50 x 97
	Height from upper-edge of DIN 35 rail
Weight	152 g
Storage temperature	-25 °C ... +85 °C
Relative air humidity (no condensation)	95 %
Vibration resistance	acc. to IEC 60068-2-6
Shock resistance	acc. to IEC 60068-2-27
Degree of protection	IP20
EMC immunity of interference	acc. to EN 61000-6-2, marine applications
EMC emission of interference	acc. to EN 61000-6-3, marine applications

DeviceNet Fieldbus Coupler

125 ... 500 Kbaud; digital and analog signals

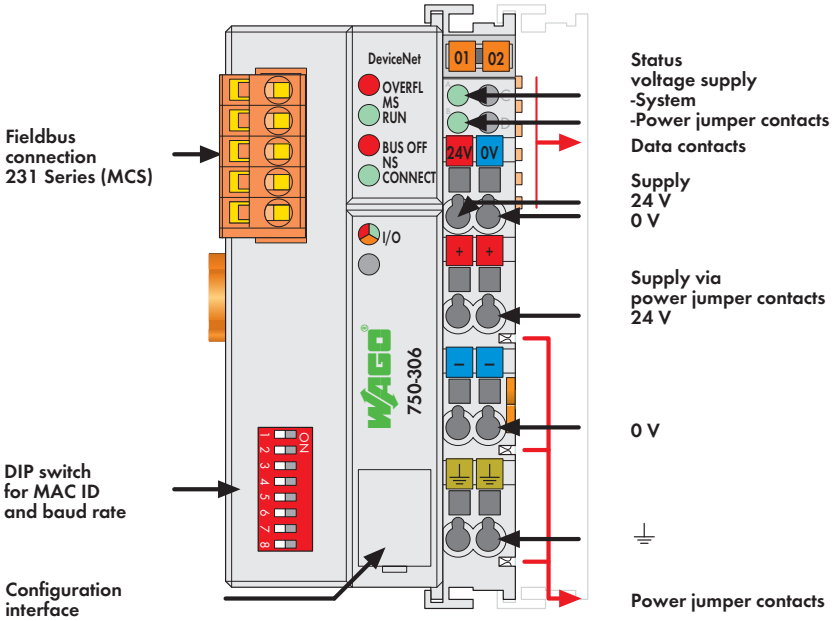

This buscoupler connects the WAGO-I/O-SYSTEM as a slave to the Device**Net**™ fieldbus.

The buscoupler automatically configures, creating a local process image which may include analog, digital or specialty modules. Analog and specialty module data is sent via words and/or bytes, digital data is sent bit by bit.

Device**Net**™ stores the process image in the corresponding Master control (PLC, PC or NC).

Notice: EDS files required

The local process image is divided into two data zones containing the data received and the data to be sent. The process data can be sent via the Device**Net**™ fieldbus to the PLC, PC or NC for further processing, and received from the field via Device**Net**™.

The data of the analog modules is stored in the process image which is created automatically according to the order in which the modules are connected to the buscoupler. The bits of the digital modules are sent byte by byte and added to the analog data. If the amount of digital information exceeds 8 bits, the buscoupler automatically starts with a new byte.

Description	Item No.	Pack. Unit
DeviceNet, w/ status byte	**750-306**	1
DeviceNet (only function with digital modules)	**750-306/000-005**	1
DeviceNet (without buskoppler status byte)	**750-306/000-006**	1

Accessories		Item No.	Pack. Unit
EDS files	Download: www.wago.com		
Miniature WSB Quick marking system			
	plain	**248-501**	5
	with marking	see Section 11	

Approvals

Certification	ODVA
Conformity marking	CE
Korea Certification	
Marine applications (versions upon request)	ABS, BV, DNV, GL, KR, LR, NKK, PRS, RINA
UL 508	
ANSI/ISA 12.12.01	Class I, Div. 2, Grp. ABCD, T4
TÜV 07 ATEX 554086 X	I M2 Ex d I Mb, II 3 G Ex nA IIC T4 Gc, II 3 D Ex tc IIIC T135°C Dc
IECEx TUN 09.0001 X	Ex d I Mb, Ex nA IIC T4 Gc, Ex tc IIIC T135°C Dc

System Data

No. of couplers connected to Master	64 with scanner
Max. no. of I/O points	approx. 6000 (depends on master)
Transmission medium	Shielded Cu cable Trunk line: 2 x 0.82 mm² + 2 x 1.7 mm² Drop line: 2 x 0.2 mm² + 2 x 0.32 mm²
Max. length of bus line	100 m ... 500 m (depends on baud rate/cable)
Baud rate	125 Kbaud, 250 Kbaud, 500 Kbaud
Buscoupler connection	5-pole male connector, 231 Series (MCS), female connector 231-305/ 010-000/ 050-000 (included)

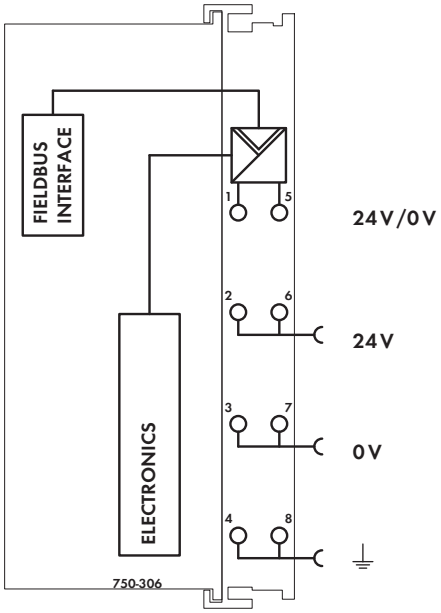

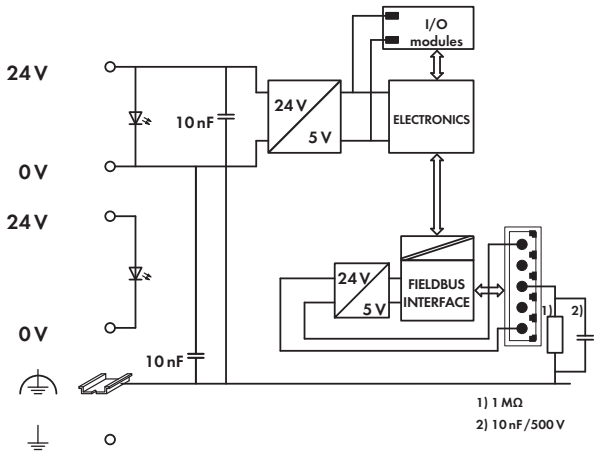

Technical Data

Number of I/O modules	64
Max. input process image	512 bytes
Max. output process image	512 bytes
Configuration	via PC or PLC
DeviceNet features	Polled I/O message connection
	Strobed I/O message connection
	Change of state
	Cyclic message connection
	Group 2 only, slave
Power supply	24 V DC (-25 % ... +30 %)
Current consumption	
via power supply terminal	< 500 mA / 24 V
via DeviceNet interface	< 120 mA / 11 V
Power supply efficiency	87 %
Internal current consumption (5 V)	350 mA
Total current for I/O modules (5 V)	1650 mA
Isolation	500 V system/supply
Voltage via power jumper contacts	24 V DC (-25 % ... +30 %)
Current via power jumper contacts (max.)	10 A DC

General Specifications

Operating temperature	0 °C ... +55 °C
Wire connection	CAGE CLAMP®
Cross sections	0.08 mm² ... 2.5 mm² / AWG 28 ... 14
Strip lengths	8 ... 9 mm / 0.33 in
Dimensions (mm) W x H x L	51 x 65 x 100
	Height from upper-edge of DIN 35 rail
Weight	200 g
Storage temperature	-25 °C ... +85 °C
Relative air humidity (no condensation)	95 %
Vibration resistance	acc. to IEC 60068-2-6
Shock resistance	acc. to IEC 60068-2-27
Degree of protection	IP20
EMC immunity of interference	acc. to EN 61000-6-2, marine applications
EMC emission of interference	acc. to EN 61000-6-4, marine applications

DeviceNet ECO Fieldbus Coupler

125 ... 500 Kbaud; digital and analog signals

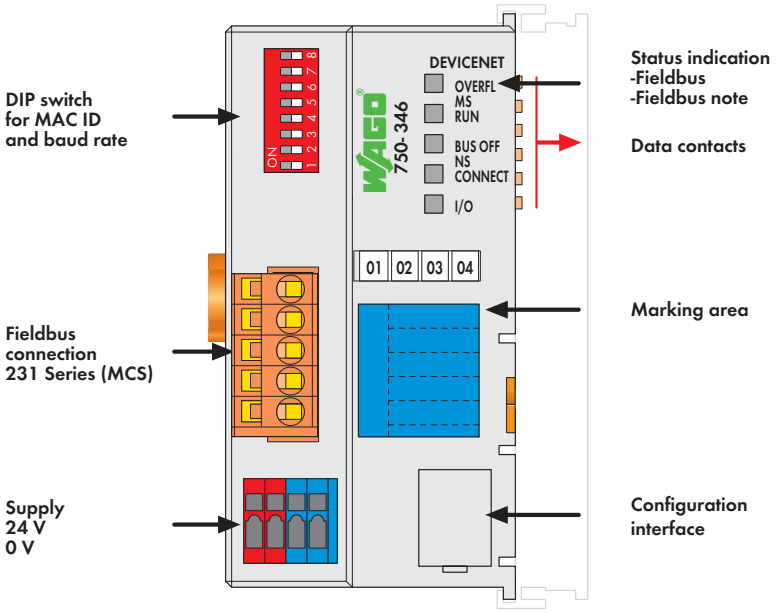

The ECO fieldbus coupler is designed for applications with a reduced scale I/O requirement. Using digital only process data or small amounts of analogs, while retaining all of the choice that's offered by the Series 750 I/O.

The coupler has an integrated supply terminal for the system voltage. The field power jumper contacts are supplied via a separate supply module.

The Device**Net**™ buscoupler automatically configures, creating a local process image which may include analog, digital or specialty modules. Device**Net**™ stores the process image in the corresponding Master control (PLC, PC or NC).

The local process image is divided into two data zones containing the data received and the data to be sent. The process data can be sent via the Device**Net**™ fieldbus to the PLC, PC or NC for further processing, and received from the field via Device**Net**™.

The data of the analog modules is stored in the process image which is created automatically according to the order in which the modules are connected to the buscoupler. The bits of the digital modules are sent byte by byte and added to the analog data. If the amount of digital information exceeds 8 bits, the buscoupler automatically starts with a new byte.

Notice: EDS files required

Description	Item No.	Pack. Unit
DeviceNet ECO	**750-346**	1

Accessories		Item No.	Pack. Unit
EDS files	Download: www.wago.com		
Miniature WSB Quick marking system			
	plain	**248-501**	5
	with marking	see Section 11	

Approvals

Conformity marking	CE
Korea Certification	
UL 508	
ANSI/ISA 12.12.01	Class I, Div. 2, Grp. ABCD, T4
TÜV 12.1297 X (Brazil)	Ex nA IIC T4 Gc
TÜV 07 ATEX 554086 X	I M2 Ex d I Mb, II 3 G Ex nA IIC T4 Gc, II 3 D Ex tc IIIC T135°C Dc
IECEx TUN 09.0001 X	Ex d I Mb, Ex nA IIC T4 Gc, Ex tc IIIC T135°C Dc

System Data

No. of couplers connected to Master	64 with scanner
Max. no. of I/O points	approx. 6000 (depends on master)
Transmission medium	Shielded Cu cable Trunk line: 2 x 0.82 mm² + 2 x 1.7 mm² Drop line: 2 x 0.2 mm² + 2 x 0.32 mm²
Max. length of bus line	100 m ... 500 m (depends on baud rate/cable)
Baud rate	125 Kbaud, 250 Kbaud, 500 Kbaud
Buscoupler connection	5-pole male connector, 231 Series (MCS), female connector 231-305/ 010-000/ 050-000 (included)

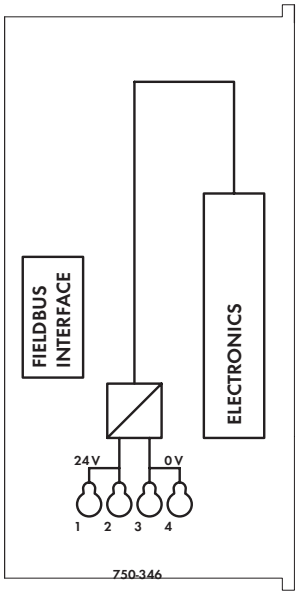

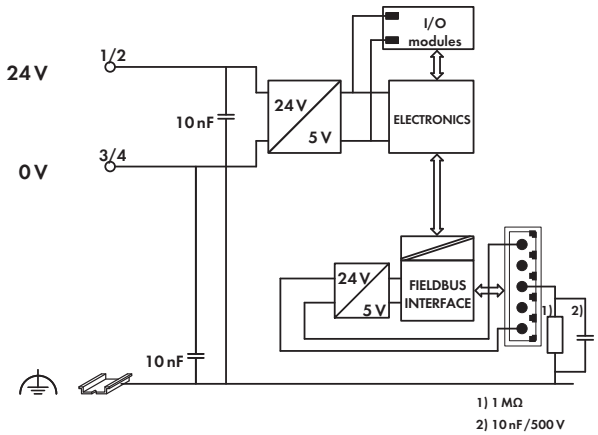

Technical Data

Number of I/O modules	64
Max. input process image	32 bytes
Max. output process image	32 bytes
Configuration	via PC or PLC
Power supply	24 V DC (-15 % ... +20 %)
Current consumption	
via power supply terminal (typ.) at	
nominal load (24 V)	260 mA
via DeviceNet interface	< 120 mA / 11 V
Efficiency of the power supply (typ.) at	
nominal load (24 V)	80 %
Internal current consumption (5 V)	350 mA
Total current for I/O modules (5 V)	650 mA

General Specifications

Operating temperature	0 °C ... +55 °C
Wire connection	CAGE CLAMP®
Cross sections	0.08 mm² ... 1.5 mm² / AWG 28 ... 14
Strip lengths	5 ... 6 mm / 0.22 in
Dimensions (mm) W x H x L	50 x 65 x 97
	Height from upper-edge of DIN 35 rail
Weight	115 g
Storage temperature	-25 °C ... +85 °C
Relative air humidity (no condensation)	95 %
Vibration resistance	acc. to IEC 60068-2-6
Shock resistance	acc. to IEC 60068-2-27
Degree of protection	IP20
EMC immunity of interference	acc. to EN 61000-6-2
EMC emission of interference	acc. to EN 61000-6-4

CANopen Fieldbus Coupler

10 Kbaud ... 1 Mbaud; digital and analog signals

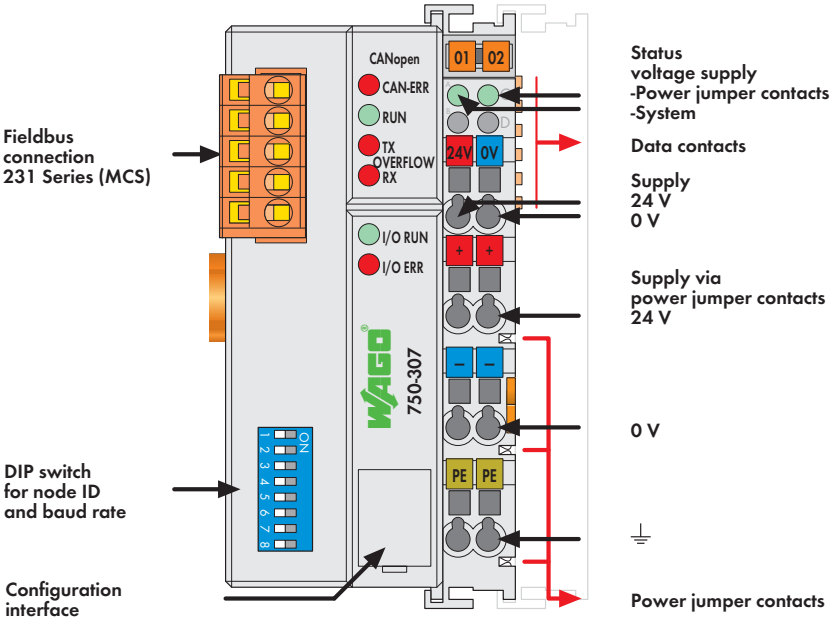

This buscoupler connects the WAGO-I/O-SYSTEM as a slave to the CANopen fieldbus. The module data is transmitted using PDOs and SDOs.

The buscoupler automatically configures, creating a local process image which may include analog, digital or specialty modules. Analog and specialty module data is sent via words and/or bytes, digital data is sent bit by bit.

The local process image is divided into two data zones containing the data received and the data to be sent. The process data can be sent via the CANopen fieldbus to the PLC, PC or NC for further processing, and received from the field via CANopen.

The data of the analog modules is stored in the PDOs according to the order in which the modules are connected to the buscoupler. The bits of the digital modules are sent byte by byte and also mapped in the PDOs. If the amount of digital information exceeds 8 bits, the buscoupler automatically starts with a new byte.

All entries of the object dictionary can be mapped - as the user likes - in the 5 Rx PDOs and 5 Tx PDOs.

The complete input and output process image can be transmitted using SDOs.

When implementing new installations, please consider 750-337 fieldbus coupler with extended functions. Notice: EDS files required!

Description	Item No.	Pack. Unit
CANopen	**750-307**	1

Accessories		Item No.	Pack. Unit
EDS files	Download: www.wago.com		
Miniature WSB Quick marking system			
	plain	**248-501**	5
	with marking	see Section 11	

Approvals

Conformity marking	CE
Korea Certification	
UL 508	
ANSI/ISA 12.12.01	Class I, Div. 2, Grp. ABCD, T4
TÜV 07 ATEX 554086 X	I M2 Ex d I Mb, II 3 G Ex nA IIC T4 Gc, II 3 D Ex tc IIIC T135°C Dc
IECEx TUN 09.0001 X	Ex d I Mb, Ex nA IIC T4 Gc, Ex tc IIIC T135°C Dc

System Data

No. of couplers connected to Master	110
Transmission medium	Shielded Cu cable 3 x 0.25 mm²
Max. length of bus line	30 m ... 1000 m (depends on baud rate/cable)
Baud rate	10 Kbaud ... 1 Mbaud
Buscoupler connection	5-pole male connector, 231 Series (MCS), female connector 231-305/ 010-000 (included)

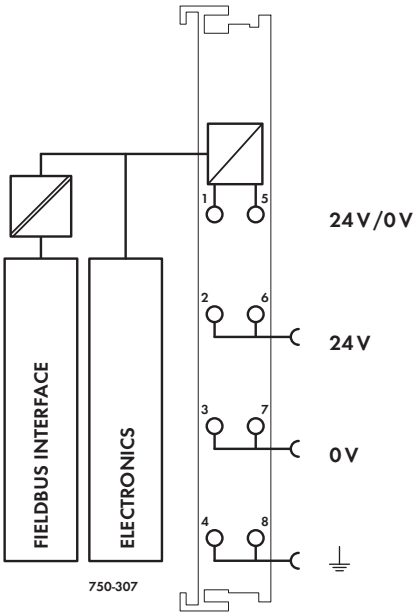

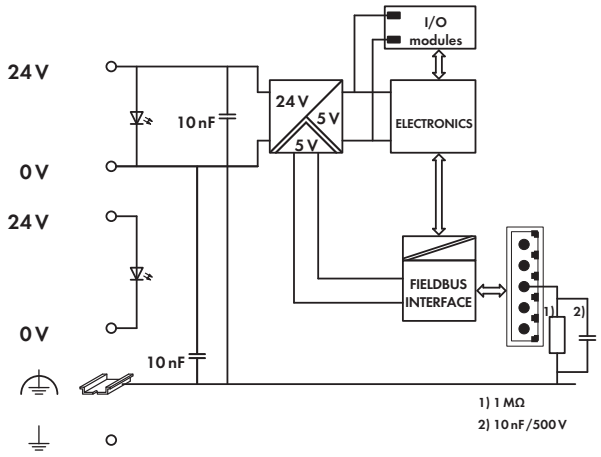

Technical Data

Number of I/O modules	64
Max. input process image	512 bytes
Max. output process image	512 bytes
Configuration	via PC or PLC
No. of PDOs	5 Tx / 5 Rx
No. of SDOs	2 server SDOs
Communication profile	DS-301 V3.0
Device profile	DS-401 V1.4
COB ID distribution	SDO, standard
Node ID distribution	DIP switches
Other CANopen features	NMT slave
	Minimum boot-up
	Variable PDO mapping
	Emergency message
	Life guarding
Power supply	24 V DC (-15 % ... +20 %)
Max. input current (24 V)	500 mA
Power supply efficiency	87 %
Internal current consumption (5 V)	350 mA
Total current for I/O modules (5 V)	1650 mA
Isolation	500 V system/supply
Voltage via power jumper contacts	24 V DC (-15 % ... +20 %)
Current via power jumper contacts (max.)	10 A DC

General Specifications

Operating temperature	0 °C ... +55 °C
Wire connection	CAGE CLAMP®
Cross sections	0.08 mm² ... 2.5 mm² / AWG 28 ... 14
Strip lengths	8 ... 9 mm / 0.33 in
Dimensions (mm) W x H x L	51 x 65 x 100
	Height from upper-edge of DIN 35 rail
Weight	200 g
Storage temperature	-25 °C ... +85 °C
Relative air humidity (no condensation)	95 %
Vibration resistance	acc. to IEC 60068-2-6
Shock resistance	acc. to IEC 60068-2-27
Degree of protection	IP20
EMC immunity of interference	acc. to EN 61000-6-2
EMC emission of interference	acc. to EN 61000-6-4

CANopen Fieldbus Coupler

10 Kbaud ... 1 Mbaud; digital and analog signals

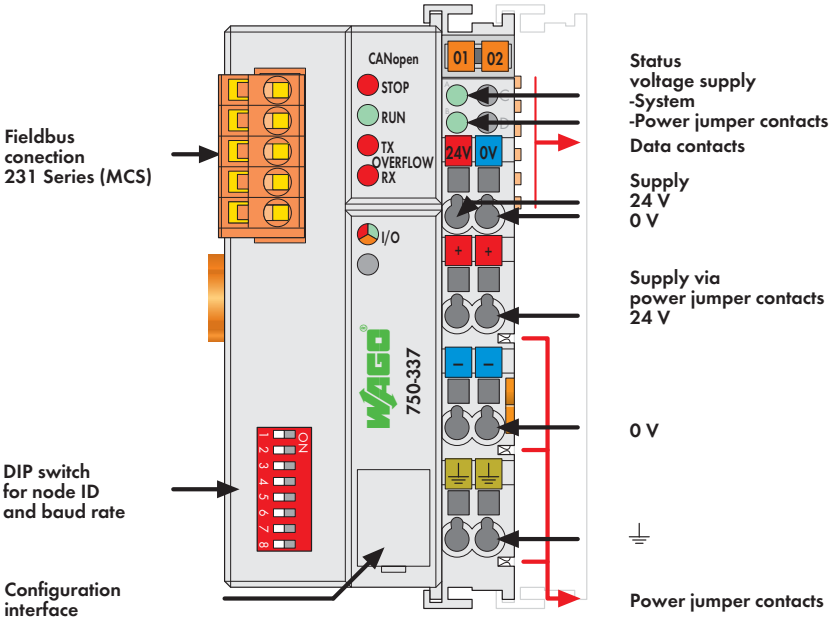

This buscoupler connects the WAGO-I/O-SYSTEM as a slave to the CANopen fieldbus. The module data is transmitted using PDOs and SDOs.

The buscoupler automatically configures, creating a local process image which may include analog, digital or specialty modules. Analog and specialty module data is sent via words and/or bytes, digital data is sent bit by bit.

The local process image is divided into two data zones containing the data received and the data to be sent. The process data can be sent via the CANopen fieldbus to the PLC, PC or NC for further processing, and received from the field via CANopen.

The data of the analog modules is stored in the PDOs according to the order in which the modules are connected to the buscoupler. The bits of the digital modules are sent byte by byte and also mapped in the PDOs. If the amount of digital information exceeds 8 bits, the buscoupler automatically starts with a new byte.

All entries of the object dictionary can be mapped - as the user likes - in the 32 Rx PDOs and 32 Tx PDOs.
The complete input and output process image can be transmitted using SDOs. "Spacer modules" can be set via software.

Notice: EDS files required

Description	Item No.	Pack. Unit
CANopen MCS	**750-337**	1
CANopen MCS/T	**750-337/025-000**	1
Extended temperature range: -20 °C ... +60 °C		

Accessories		Item No.	Pack. Unit
EDS files	Download: www.wago.com		
Miniature WSB Quick marking system			
	plain	**248-501**	5
	with marking	see Section 11	

Approvals

Conformity marking	CE
Korea Certification	
Marine applications (versions upon request)	ABS, BV, DNV, GL, KR, LR, NKK, PRS, RINA
UL 508	
ANSI/ISA 12.12.01	Class I, Div. 2, Grp. ABCD, T4
TÜV 12.1297 X (Brazil)	Ex nA IIC T4 Gc
TÜV 07 ATEX 554086 X	I M2 Ex d I Mb, II 3 G Ex nA IIC T4 Gc, II 3 D Ex tc IIIC T135°C Dc
IECEx TUN 09.0001 X	Ex d I Mb, Ex nA IIC T4 Gc, Ex tc IIIC T135°C Dc

System Data

No. of couplers connected to Master	110
Transmission medium	Shielded Cu cable 3 x 0.25 mm²
Max. length of bus line	30 m ... 1000 m (depends on baud rate/cable)
Baud rate	10 Kbaud ... 1 Mbaud
Buscoupler connection	5-pole male connector, 231 Series (MCS), female connector 231-305/ 010-000 (included)

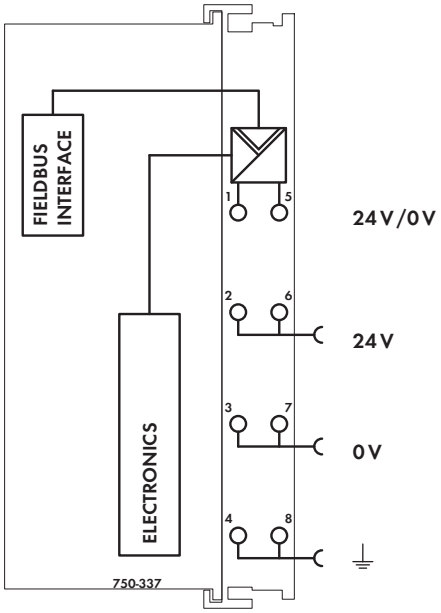

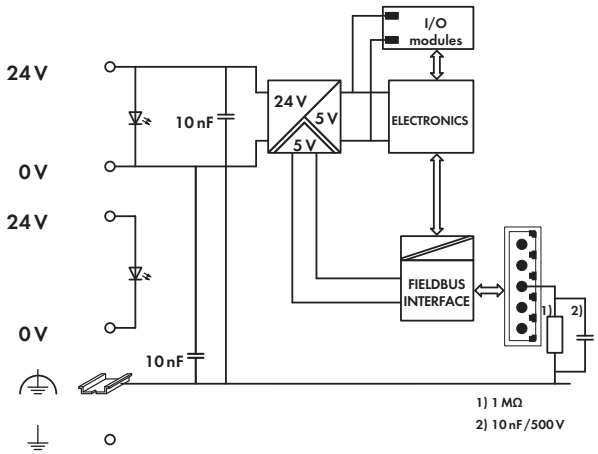

Technical Data

Number of I/O modules	64
Max. input process image	512 bytes
Max. output process image	512 bytes
Configuration	via PC or PLC
No. of PDOs	32 Tx / 32 Rx
No. of SDOs	2 server SDOs
Communication profile	DS-301 V4.1
Device profile	DS 401 V2.0
	Marginal check
	Edge-triggered PDOs
	Programmable error response
COB ID distribution	SDO, standard
Node ID distribution	DIP switches
Other CANopen features	NMT slave
	Minimum boot-up
	Variable PDO mapping
	Emergency message
	Life guarding
	Configuration of virtual modules
Power supply	24 V DC (-25 % ... +30 %)
Max. input current (24 V)	500 mA
Power supply efficiency	87 %
Internal current consumption (5 V)	350 mA
Total current for I/O modules (5 V)	1650 mA
Isolation	500 V system/supply
Voltage via power jumper contacts	24 V DC (-25 % ... +30 %)
Current via power jumper contacts (max.)	10 A DC

General Specifications

Operating temperature	0 °C ... +55 °C
Wire connection	CAGE CLAMP®
Cross sections	0.08 mm² ... 2.5 mm² / AWG 28 ... 14
Strip lengths	8 ... 9 mm / 0.33 in
Dimensions (mm) W x H x L	51 x 65 x 100
	Height from upper-edge of DIN 35 rail
Weight	220 g
Storage temperature	-25 °C ... +85 °C
Relative air humidity (no condensation)	95 %
Vibration resistance	acc. to IEC 60068-2-6
Shock resistance	acc. to IEC 60068-2-27
Degree of protection	IP20
EMC immunity of interference	acc. to EN 61000-6-2, marine applications
EMC emission of interference	acc. to EN 61000-6-4, marine applications

CANopen Fieldbus Coupler D-Sub

10 Kbaud ... 1 Mbaud; digital and analog signals

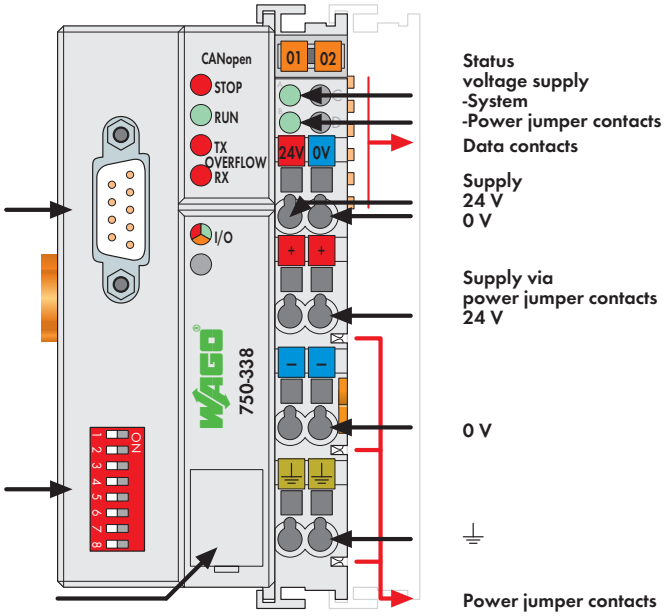

This buscoupler connects the WAGO I/O SYSTEM as a slave to the CANopen fieldbus.
The module data is transmitted using PDOs and SDOs.
The buscoupler is capable of supporting all bus modules. The buscoupler automatically configures, creating a local process image which may include analog, digital or specialty modules. Analog and specialty module data is sent via words and/or bytes, digital data is packed into bytes.
CANopen allows the storing of the process image in the corresponding Master control (PLC, PC or NC).
The local process image is divided into two data zones containing the data received and the data to be sent.

The process data can be sent via the CANopen fieldbus to the PLC, PC or NC for further processing, and received from the field via CANopen.
The data of the analog modules is stored in the PDOs according to the order in which the modules are connected to the buscoupler. The bits of the digital modules are sent byte by byte and also mapped in the PDOs. If the amount of digital information exceeds 8 bits, the buscoupler automatically starts with a new byte.
All entries of the object dictionary can be mapped - as the user likes - in the 32 Rx PDOs and 32 Tx PDOs.
The complete input and output process image can be transmitted using SDOs.
"Spacer modules" can be set via software.

Notice: EDS files required

Description	Item No.	Pack. Unit
CANopen D-Sub	**750-338**	1

Accessories		Item No.	Pack. Unit
EDS files	Download: www.wago.com		
Miniature WSB Quick marking system			
	plain	**248-501**	5
	with marking	see Section 11	

Approvals

Conformity marking	CE
Korea Certification	
Marine applications	BV, GL, NKK, PRS, RINA
UL 508	
ANSI/ISA 12.12.01	Class I, Div. 2, Grp. ABCD, T4
TÜV 07 ATEX 554086 X	I M2 Ex d I Mb, II 3 G Ex nA IIC T4 Gc, II 3 D Ex tc IIIC T135°C Dc
IECEx TUN 09.0001 X	Ex d I Mb, Ex nA IIC T4 Gc, Ex tc IIIC T135°C Dc

System Data

No. of couplers connected to Master	110
Transmission medium	Shielded Cu cable 3 x 0.25 mm²
Max. length of bus line	30 m ... 1000 m (depends on baud rate/cable)
Baud rate	10 Kbaud ... 1 Mbaud
Buscoupler connection	1 x D-Sub 9; plug

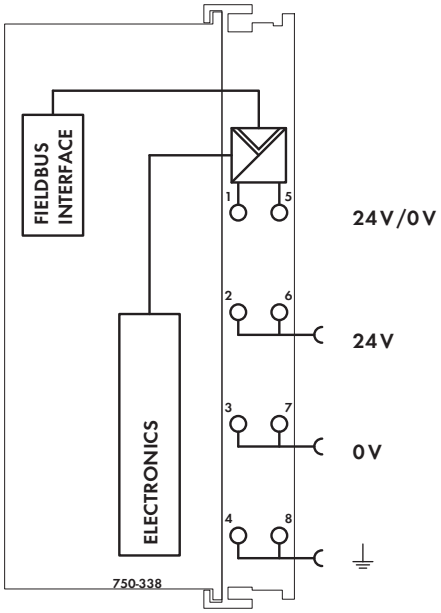

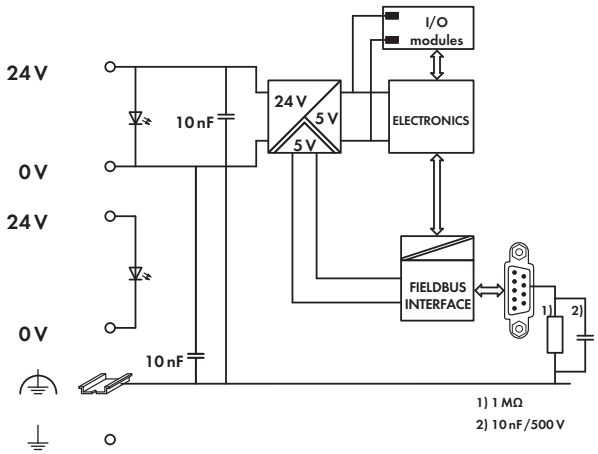

Technical Data

Number of I/O modules	64
Max. input process image	512 bytes
Max. output process image	512 bytes
Configuration	via PC or PLC
No. of PDOs	32 Tx / 32 Rx
No. of SDOs	2 server SDOs
Communication profile	DS-301 V4.1
Device profile	DS 401 V2.0
	Marginal check
	Edge-triggered PDOs
	Programmable error response
COB ID distribution	SDO, standard
Node ID distribution	DIP switches
Other CANopen features	NMT slave
	Minimum boot-up
	Variable PDO mapping
	Emergency message
	Life guarding
	Configuration of virtual modules
Power supply	24 V DC (-25 % ... +30 %)
Max. input current (24 V)	500 mA
Power supply efficiency	87 %
Internal current consumption (5 V)	350 mA
Total current for I/O modules (5 V)	1650 mA
Isolation	500 V system/supply
Voltage via power jumper contacts	24 V DC (-25 % ... +30 %)
Current via power jumper contacts (max.)	10 A DC

General Specifications

Operating temperature	0 °C ... +55 °C
Wire connection	CAGE CLAMP®
Cross sections	0.08 mm² ... 2.5 mm² / AWG 28 ... 14
Strip lengths	8 ... 9 mm / 0.33 in
Dimensions (mm) W x H x L	51 x 65 x 100
	Height from upper-edge of DIN 35 rail
Weight	200 g
Storage temperature	-25 °C ... +85 °C
Relative air humidity (no condensation)	95 %
Vibration resistance	acc. to IEC 60068-2-6
Shock resistance	acc. to IEC 60068-2-27
Degree of protection	IP20
EMC immunity of interference	acc. to EN 61000-6-2, marine applications
EMC emission of interference	acc. to EN 61000-6-4, marine applications

CANopen ECO Fieldbus Coupler MCS

10 Kbaud ... 1 Mbaud; digital and analog signals

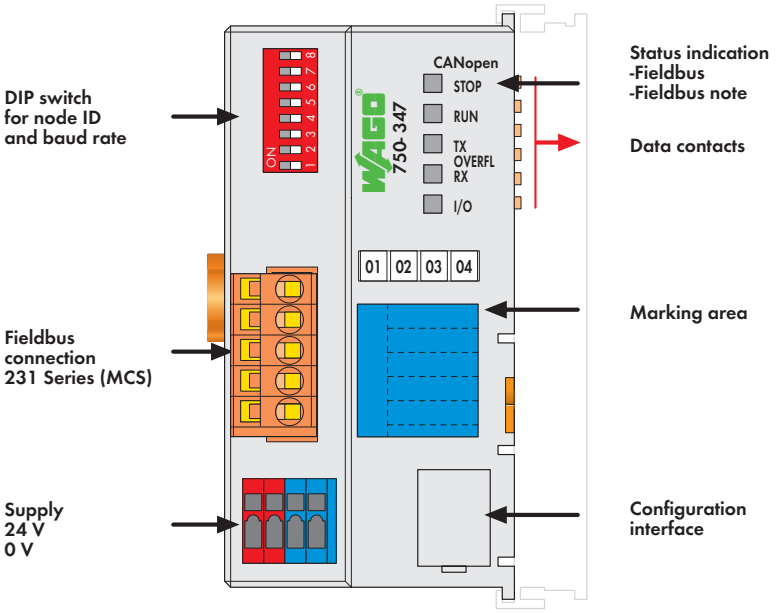

The ECO fieldbus coupler is designed for applications with a reduced scale I/O requirement. Using digital only process data or small amounts of analogs, while retaining all of the choice that's offered by the Series 750 I/O.
The coupler has an integrated supply terminal for the system voltage. The field power jumper contacts are supplied via a separate supply module.
The CANopen bus coupler is capable of supporting all I/O modules and automatically configures, creating a local process image.
The local process image is divided into two data zones containing the data received and the data to be sent. The process data can be sent via the CANopen fieldbus to the PLC, PC or NC for further processing, and received from the field via CANopen.

The data of the analog modules is stored in the PDOs according to the order in which the modules are connected to the buscoupler. The bits of the digital modules are sent byte by byte and also mapped in the PDOs. If the amount of digital information exceeds 8 bits, the buscoupler automatically starts with a new byte.

All entries of the object dictionary can be mapped - as the user likes - in the 5 Rx PDOs and 5 Tx PDOs.

The complete input and output process image can be transmitted using SDOs. "Spacer modules" can be set via software.

Notice: EDS files required

Description	Item No.	Pack. Unit
CANopen ECO MCS	**750-347**	1

Accessories		Item No.	Pack. Unit
EDS files	Download: www.wago.com		
Miniature WSB Quick marking system			
	plain	**248-501**	5
	with marking	see Section 11	

Approvals

Conformity marking	CE
Korea Certification	
Marine applications	ABS, BV, DNV, GL, KR, LR, NKK, PRS, RINA
UL 508	
ANSI/ISA 12.12.01	Class I, Div. 2, Grp. ABCD, T4
TÜV 12.1297 X (Brazil)	Ex nA IIC T4 Gc
TÜV 07 ATEX 554086 X	I M2 Ex d I Mb, II 3 G Ex nA IIC T4 Gc, II 3 D Ex tc IIIC T135°C Dc
IECEx TUN 09.0001 X	Ex d I Mb, Ex nA IIC T4 Gc, Ex tc IIIC T135°C Dc

System Data

No. of couplers connected to Master	110
Transmission medium	Shielded Cu cable 3 x 0.25 mm²
Max. length of bus line	30 m ... 1000 m (depends on baud rate/cable)
Baud rate	10 Kbaud ... 1 Mbaud
Buscoupler connection	5-pole male connector, 231 Series (MCS), female connector 231-305/ 010-000 (included)

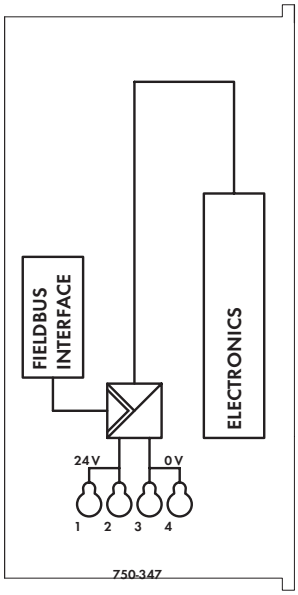

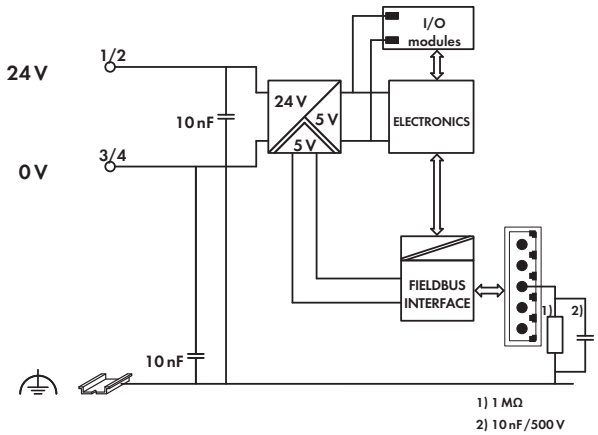

Technical Data

Number of I/O modules	64
Max. input process image	32 bytes
Max. output process image	32 bytes
Configuration	via PC or PLC
No. of PDOs	5 Tx / 5 Rx
No. of SDOs	1 server SDO
Communication profile	DS-301 V4.1
Device profile	DS-401 V2.0
	Programmable error response
COB ID distribution	SDO, standard
Node ID distribution	DIP switches
Other CANopen features	NMT slave
	Minimum boot-up
	Variable PDO mapping
	Emergency message
	Life guarding
Power supply	24 VDC (-25 % ... +30 %)
Input current typ. at rated load (24 V)	260 mA
Efficiency of the power supply (typ.) at nominal load (24 V)	80 %
Internal current consumption (5 V)	350 mA
Total current for I/O modules (5 V)	650 mA

General Specifications

Operating temperature	0 °C ... +55 °C
Wire connection	CAGE CLAMP®
Cross sections	0.08 mm² ... 1.5 mm² / AWG 28 ... 16
Strip lengths	5 ... 6 mm / 0.22 in
Dimensions (mm) W x H x L	50 x 65 x 97
	Height from upper-edge of DIN 35 rail
Weight	135 g
Storage temperature	-25 °C ... +85 °C
Relative air humidity (no condensation)	95 %
Vibration resistance	acc. to IEC 60068-2-6
Shock resistance	acc. to IEC 60068-2-27
Degree of protection	IP20
EMC immunity of interference	acc. to EN 61000-6-2, marine applications
EMC emission of interference	acc. to EN 61000-6-4, marine applications

CANopen ECO Fieldbus Coupler D-Sub

10 Kbaud ... 1 Mbaud; digital and analog signals

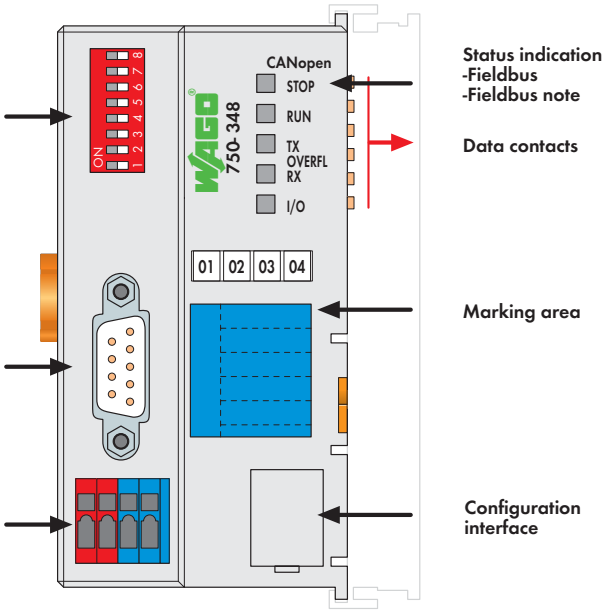

The ECO fieldbus coupler is designed for applications with a reduced scale I/O requirement. Using digital only process data or small amounts of analogs, while retaining all of the choice that's offered by the Series 750 I/O.
The coupler has an integrated supply terminal for the system voltage. The field power jumper contacts are supplied via a separate supply module.
The CANopen bus coupler is capable of supporting all I/O modules and automatically configures, creating a local process image.
The local process image is divided into two data zones containing the data received and the data to be sent. The process data can be sent via the CANopen fieldbus to the PLC, PC or NC for further processing, and received from the field via CANopen.

The data of the analog modules is stored in the PDOs according to the order in which the modules are connected to the buscoupler. The bits of the digital modules are sent byte by byte and also mapped in the PDOs. If the amount of digital information exceeds 8 bits, the buscoupler automatically starts with a new byte.

All entries of the object dictionary can be mapped - as the user likes - in the 5 Rx PDOs and 5 Tx PDOs.

The complete input and output process image can be transmitted using SDOs. "Spacer modules" can be set via software.

Notice: EDS files required

Description	Item No.	Pack. Unit
CANopen ECO D-Sub	**750-348**	1

Accessories		Item No.	Pack. Unit
EDS files	Download: www.wago.com		
Miniature WSB Quick marking system			
	plain	**248-501**	5
	with marking	see Section 11	

Approvals

Conformity marking	CE
Korea Certification	
Marine applications	ABS, BV, DNV, GL, KR, LR, NKK, PRS, RINA
UL 508	
ANSI/ISA 12.12.01	Class I, Div. 2, Grp. ABCD, T4
TÜV 12.1297 X (Brazil)	Ex nA IIC T4 Gc
TÜV 07 ATEX 554086 X	I M2 Ex d I Mb, II 3 G Ex nA IIC T4 Gc, II 3 D Ex tc IIIC T135°C Dc
IECEx TUN 09.0001 X	Ex d I Mb, Ex nA IIC T4 Gc, Ex tc IIIC T135°C Dc

System Data

No. of couplers connected to Master	110
Transmission medium	Shielded Cu cable 3 x 0.25 mm²
Max. length of bus line	30 m ... 1000 m (depends on baud rate/cable)
Baud rate	10 Kbaud ... 1 Mbaud
Buscoupler connection	1 x D-Sub 9; plug

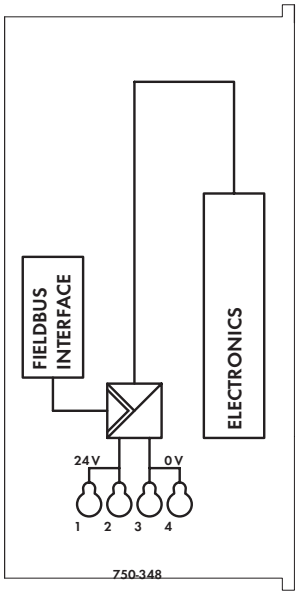

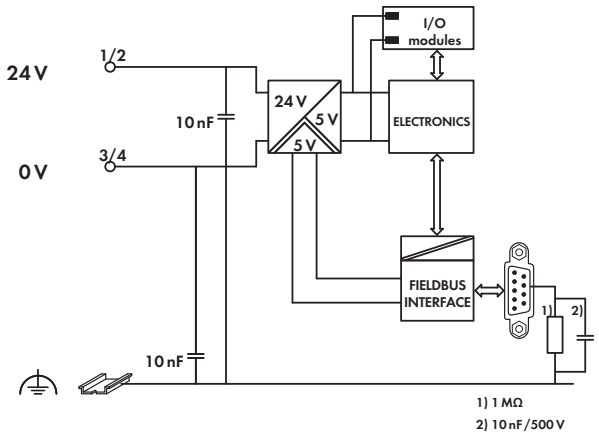

Technical Data

Number of I/O modules	64
Max. input process image	32 bytes
Max. output process image	32 bytes
Configuration	via PC or PLC
No. of PDOs	5 Tx / 5 Rx
No. of SDOs	1 server SDO
Communication profile	DS-301 V4.1
Device profile	DS-401 V2.0
	Programmable error response
COB ID distribution	SDO, standard
Node ID distribution	DIP switches
Other CANopen features	NMT slave
	Minimum boot-up
	Variable PDO mapping
	Emergency message
	Life guarding
Power supply	24 V DC (-25 % ... +30 %)
Input current typ. at rated load (24 V)	260 mA
Efficiency of the power supply (typ.) at nominal load (24 V)	80 %
Internal current consumption (5 V)	350 mA
Total current for I/O modules (5 V)	650 mA

General Specifications

Operating temperature	0 °C ... +55 °C
Wire connection	CAGE CLAMP®
Cross sections	0.08 mm² ... 1.5 mm² / AWG 28 ... 16
Strip lengths	5 ... 6 mm / 0.22 in
Dimensions (mm) W x H x L	50 x 65 x 97
	Height from upper-edge of DIN 35 rail
Weight	115 g
Storage temperature	-25 °C ... +85 °C
Relative air humidity (no condensation)	95 %
Vibration resistance	acc. to IEC 60068-2-6
Shock resistance	acc. to IEC 60068-2-27
Degree of protection	IP20
EMC immunity of interference	acc. to EN 61000-6-2, marine applications
EMC emission of interference	acc. to EN 61000-6-4, marine applications

SERCOS Fieldbus Coupler

2-port; 100 Mbit/s; digital and analog signals

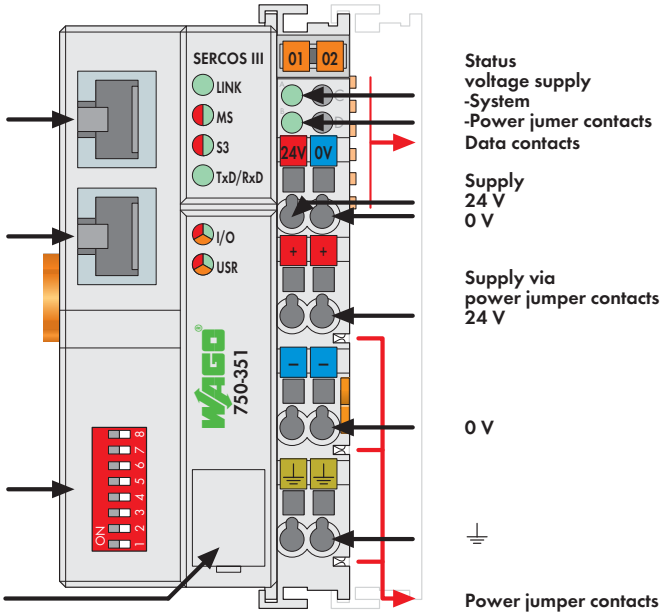

The 750-351 Fielbus Coupler connects the WAGO-I/O-SYSTEM to the SERCOS network.
The fieldbus coupler is capable of supporting all WAGO I/O modules. The buscoupler automatically configures, creating a local process image which may include analog, digital or specialty modules. Analog and specialty module data is sent via words and/or bytes; digital data is sent bit by bit.
The buscoupler can integrate into the application as a SERCOS I/O device and supports the SERCOS service channel (SVC), real-time channel (RTC) and TCP/IP communication standard.

Two integrated ports allow easy creation of a line or ring structure without requiring additional components. The ports support Auto-MDI/MDIX and will automatically detect the data direction so interchanging cables on the coupler will not impact operation.
The SERCOS node ID is assigned directly via network configuration.

Description	Item No.	Pack. Unit
SERCOS Coupler	**750-351**	1

Accessories		Item No.	Pack. Unit
Miniature WSB Quick marking system			
	plain	**248-501**	5
	with marking	see Section 11	

Approvals

SERCOS version	V1.1.1
IO profile	V1.1.1
Conformity marking	CE
Korea Certification	
Marine applications	ABS, BV, DNV, GL, KR, LR, PRS, RINA
UL 508	
ANSI/ISA 12.12.01	Class I, Div. 2, Grp. ABCD, T4
TÜV 07 ATEX 554086 X	I M2 Ex d I Mb, II 3 G Ex nA IIC T4 Gc, II 3 D Ex tc IIIC T135°C Dc
IECEx TUN 09.0001 X	Ex d I Mb, Ex nA IIC T4 Gc, Ex tc IIIC T135°C Dc

System Data

Number of couplers (slaves) in Sercos ring	512
Transmission medium	Twisted Pair S-UTP 100 Ω Cat. 5
Max. length of fieldbus segment	100 m, limited by ETHERNET specification
Max. length of network	51.2 km, limited by ETHERNET specification
Baud rate	100 Mbit/s, full duplex
Buscoupler connection	2 x RJ-45
Protocols	SERCOS, FSP-IO, TCP/IP, FTP, HTTP, BootP, DHCP, SNTP
Supported services	SVC, RTC, CC, IP, ring break (GDP_Basic, SCP_VarCFG, SCP_Sync)

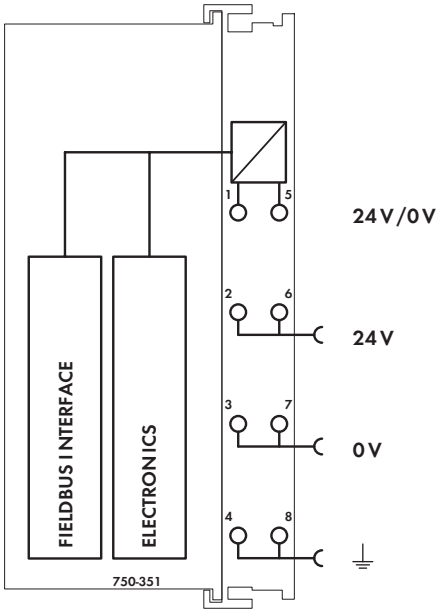

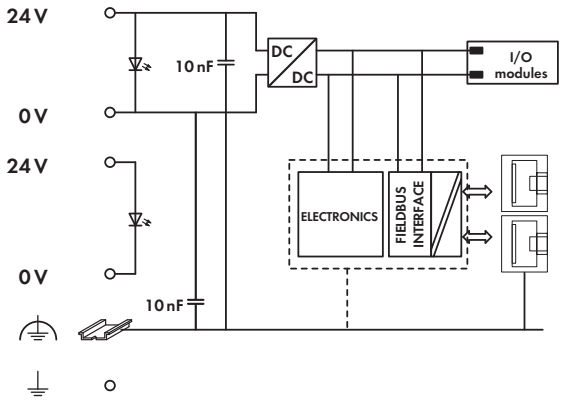

Technical Data

Number of I/O modules	64
with bus extension	250
Max. input process image	2 Kbytes (RTC and SVC)
Max. output process image	2 Kbytes (RTC and SVC)
Configuration	Node configuration via:
	WAGO ETHERNET settings,
	Web-based management,
	WAGO-I/O-CHECK,
	SERCOS Master (CP2 or higher),
	address selector switch
Power supply	24 V DC (-25 % ... +30 %)
Max. input current (24 V)	500 mA
Power supply efficiency	87 %
Internal current consumption (5 V)	300 mA
Total current for I/O modules (5 V)	1700 mA
Isolation	500 V system/supply
Voltage via power jumper contacts	24 V DC (-25 % ... +30 %)
Current via power jumper contacts (max.)	10 A DC

General Specifications

Operating temperature	0 °C ... +55 °C
Wire connection	CAGE CLAMP®
Cross sections	0.08 mm² ... 2.5 mm² / AWG 28 ... 14
Strip lengths	8 ... 9 mm / 0.33 in
Dimensions (mm) W x H x L	51 x 65 x 100
	Height from upper-edge of DIN 35 rail
Weight	210 g
Storage temperature	-25 °C ... +85 °C
Relative air humidity (no condensation)	95 %
Vibration resistance	acc. to IEC 60068-2-6
Shock resistance	acc. to IEC 60068-2-27
Degree of protection	IP20
EMC immunity of interference	acc. to EN 61000-6-2, marine applications
EMC emission of interference	acc. to EN 61000-6-4, marine applications

MODBUS Fieldbus Coupler

RS-485; 150 baud ... 115.2 Kbaud; digital and analog signals

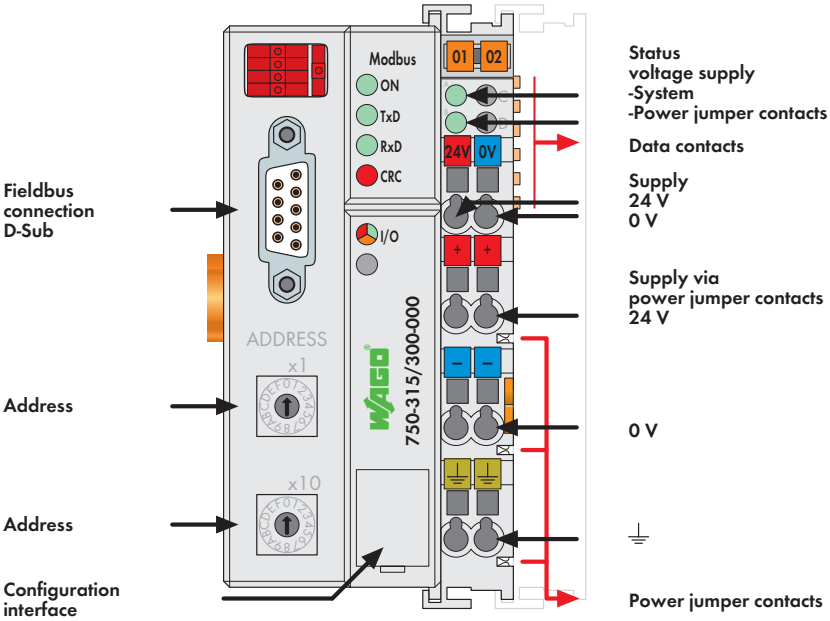

This buscoupler connects the WAGO-I/O-SYSTEM as a slave to the MODBUS fieldbus.

The buscoupler automatically configures, creating a local process image which may include analog, digital or specialty modules. Analog and specialty module data is sent via words and/or bytes, digital data is sent bit by bit.

The data of the analog modules is stored in the process image, which is created automatically according to the order in which the modules are connected to the buscoupler. The bits of the digital modules are sent byte by byte and added to the analog data. If the amount of digital information exceeds 8 bits, the buscoupler automatically starts with a new byte.

Description	Item No.	Pack. Unit
MODBUS / RS-485 / 150 Bd ... 115.2 kBd	**750-315/300-000**	1

Accessories		Item No.	Pack. Unit
Miniature WSB Quick marking system			
	plain	**248-501**	5
	with marking	see Section 11	

Approvals

Conformity marking	CE
Marine applications	BV, DNV, GL, KR, NKK, PRS, RINA
UL 508	
ANSI/ISA 12.12.01	Class I, Div. 2, Grp. ABCD, T4
TÜV 07 ATEX 554086 X	I M2 Ex d I Mb, II 3 G Ex nA IIC T4 Gc, II 3 D Ex tc IIIC T135°C Dc
IECEx TUN 09.0001 X	Ex d I Mb, Ex nA IIC T4 Gc, Ex tc IIIC T135°C Dc

System Data

No. of couplers connected to Master	247 with repeater
Max. no. of I/O points	approx. 6000 (depends on master)
Transmission medium	Shielded Cu cable 2 (4) x 0.25 mm²
Max. length of fieldbus segment	1200 m (depends on baud rate/cable)
Baud rate	150 baud ... 115.2 Kbaud
Buscoupler connection	1 x D-Sub 9; socket

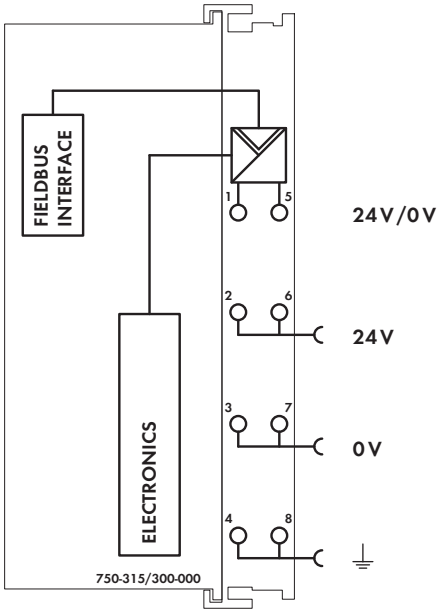

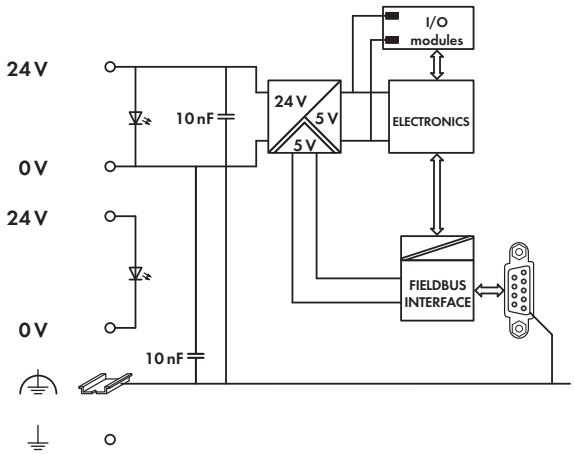

Technical Data

Number of I/O modules	64
Max. input process image	512 bytes
Max. output process image	512 bytes
Configuration	Via PC or rotary encoder switch
Power supply	24 V DC (-25 % ... +30 %)
Max. input current (24 V)	500 mA
Power supply efficiency	87 %
Internal current consumption (5 V)	350 mA
Total current for I/O modules (5 V)	1650 mA
Isolation	500 V system/supply
Voltage via power jumper contacts	24 V DC (-25 % ... +30 %)
Current via power jumper contacts (max.)	10 A DC

General Specifications

Operating temperature	0 °C ... +55 °C
Wire connection	CAGE CLAMP®
Cross sections	0.08 mm² ... 2.5 mm² / AWG 28 ... 14
Strip lengths	8 ... 9 mm / 0.33 in
Dimensions (mm) W x H x L	51 x 65 x 100
	Height from upper-edge of DIN 35 rail
Weight	183.2 g
Storage temperature	-25 °C ... +85 °C
Relative air humidity (no condensation)	95 %
Vibration resistance	acc. to IEC 60068-2-6
Shock resistance	acc. to IEC 60068-2-27
Degree of protection	IP20
EMC immunity of interference	acc. to EN 61000-6-2, marine applications
EMC emission of interference	acc. to EN 61000-6-4, marine applications

MODBUS Fieldbus Coupler

RS-232; 150 baud ... 115.2 Kbaud; digital and analog signals

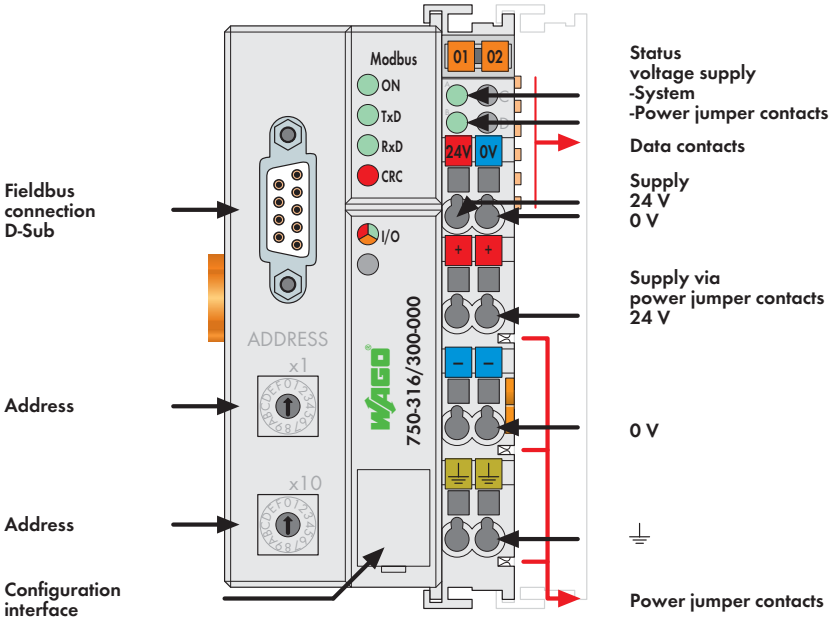

This buscoupler connects the WAGO-I/O-SYSTEM as a slave to the MODBUS fieldbus.

The buscoupler automatically configures, creating a local process image which may include analog, digital or specialty modules. Analog and specialty module data is sent via words and/or bytes, digital data is sent bit by bit.

The data of the analog modules is stored in the process image, which is created automatically according to the order in which the modules are connected to the buscoupler. The bits of the digital modules are sent byte by byte and added to the analog data. If the amount of digital information exceeds eight bits, the buscoupler automatically starts with a new byte.

Description	Item No.	Pack. Unit
MODBUS / RS-232 / 150 Bd ... 115.2 kBd	**750-316/300-000**	1

Accessories		Item No.	Pack. Unit
Miniature WSB Quick marking system			
	plain	**248-501**	5
	with marking	see Section 11	

Approvals

Conformity marking	CE
Marine applications	BV, DNV, GL, KR, NKK, PRS, RINA
UL 508	
ANSI/ISA 12.12.01	Class I, Div. 2, Grp. ABCD, T4
TÜV 07 ATEX 554086 X	I M2 Ex d I Mb, II 3 G Ex nA IIC T4 Gc, II 3 D Ex tc IIIC T135°C Dc
IECEx TUN 09.0001 X	Ex d I Mb, Ex nA IIC T4 Gc, Ex tc IIIC T135°C Dc

System Data

No. of couplers connected to Master	247 with repeater
Max. no. of I/O points	approx. 6000 (depends on master)
Transmission medium	Shielded Cu cable 2 (4) x 0.25 mm²
Max. length of fieldbus segment	1200 m (depends on baud rate/cable)
Baud rate	150 baud ... 115.2 Kbaud
Buscoupler connection	1 x D-Sub 9; socket

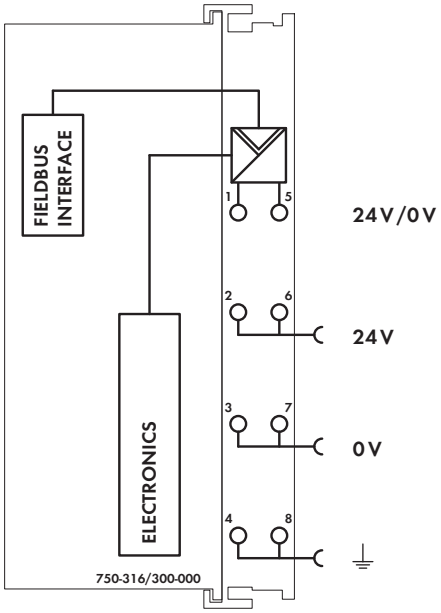

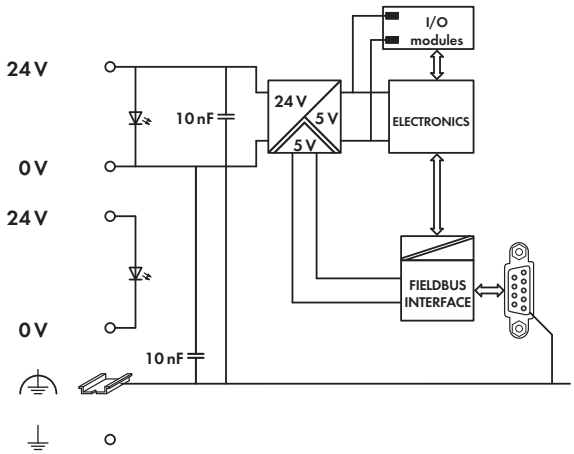

Technical Data

Number of I/O modules	64
Max. input process image	512 bytes
Max. output process image	512 bytes
Configuration	Via PC or rotary encoder switch
Power supply	24 V DC (-25 % ... +30 %)
Max. input current (24 V)	500 mA
Power supply efficiency	87 %
Internal current consumption (5 V)	350 mA
Total current for I/O modules (5 V)	1650 mA
Isolation	500 V system/supply
Voltage via power jumper contacts	24 V DC (-25 % ... +30 %)
Current via power jumper contacts (max.)	10 A DC

General Specifications

Operating temperature	0 °C ... +55 °C
Wire connection	CAGE CLAMP®
Cross sections	0.08 mm² ... 2.5 mm² / AWG 28 ... 14
Strip lengths	8 ... 9 mm / 0.33 in
Dimensions (mm) W x H x L	51 x 65 x 100
	Height from upper-edge of DIN 35 rail
Weight	184.8 g
Storage temperature	-25 °C ... +85 °C
Relative air humidity (no condensation)	95 %
Vibration resistance	acc. to IEC 60068-2-6
Shock resistance	acc. to IEC 60068-2-27
Degree of protection	IP20
EMC immunity of interference	acc. to EN 61000-6-2, marine applications
EMC emission of interference	acc. to EN 61000-6-4, marine applications

INTERBUS Fieldbus Coupler

500 Kbaud; digital and analog signals

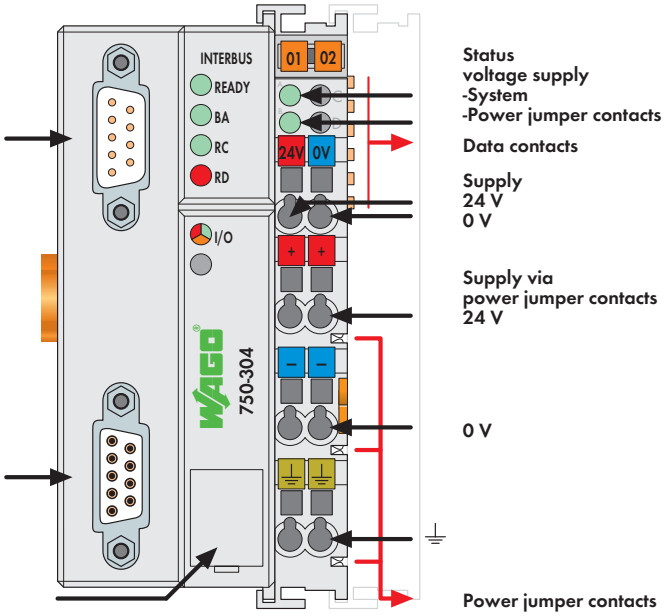

This buscoupler connects the WAGO-I/O-SYSTEM as a slave to the INTERBUS fieldbus.

The buscoupler automatically configures, creating a local process image which may include analog, digital or specialty modules. Analog and specialty module data is sent via words and/or bytes, digital data is sent bit by bit.

INTERBUS stores the process image in the corresponding Master control (PLC, PC or NC).

The local process image is divided into two data zones containing the data received and the data to be sent. The process data can be sent via the INTERBUS fieldbus to the PLC, PC or NC for further processing, and received from the field via INTERBUS. The process data can be sent via the INTERBUS fieldbus to the PLC, PC or NC for further processing, and received from the field via INTERBUS.

The data of the analog modules is stored in the process image which is created automatically according to the order in which the modules are connected to the buscoupler. The bits of the digital modules are sent byte by byte and added to the analog data. If the amount of digital information exceeds 8 bits, the buscoupler automatically starts with a new byte.

Description	Item No.	Pack. Unit
INTERBUS 500 kBd	**750-304**	1

Accessories	Item No.	Pack. Unit
INTERBUS files	Download: www.wago.com	
Miniature WSB Quick marking system		
plain	**248-501**	5
with marking	see Section 11	

Standards and Approvals

Standard	EN 50254
Certification	INTERBUS CLUB
Conformity marking	CE
Korea Certification	
UL 508	
ANSI/ISA 12.12.01	Class I, Div. 2, Grp. ABCD, T4
TÜV 07 ATEX 554086 X	I M2 Ex d I Mb, II 3 G Ex nA IIC T4 Gc, II 3 D Ex tc IIIC T135°C Dc
IECEx TUN 09.0001 X	Ex d I Mb, Ex nA IIC T4 Gc, Ex tc IIIC T135°C Dc

System Data

No. of couplers connected to Master	256
Max. no. of I/O points	4096 (depends on master)
Transmission medium	Certified Cu cable
Max. length of fieldbus segment	400 m
Baud rate	500 Kbaud
Transmission time	typ. 1.43 ms (10 couplers; 32 digital I/Os
Buscoupler connection	1 x D-Sub 9; plug for input interface 1 x D-Sub 9; socket for output interface

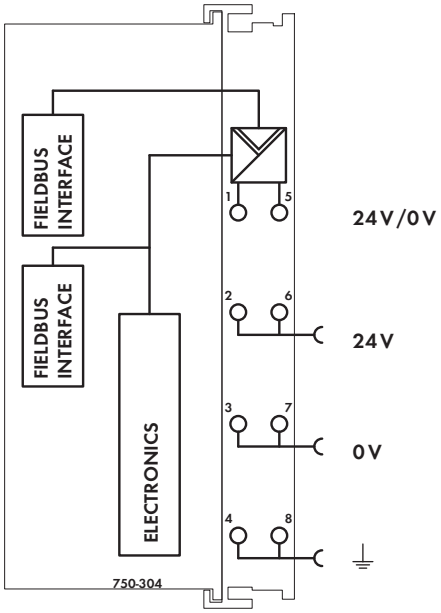

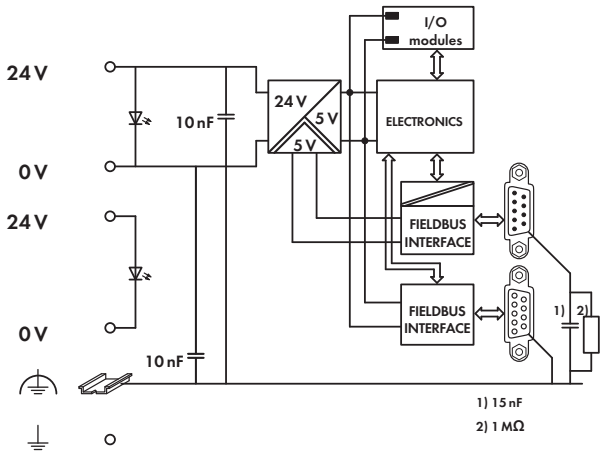

Technical Data

Number of I/O modules	64
Max. input process image	64 bytes
Max. output process image	64 bytes
Configuration	via PC or PLC
Power supply	24 V DC (-15 % ... +20 %)
Max. input current (24 V)	500 mA
Power supply efficiency	87 %
Internal current consumption (5 V)	300 mA
	(as from version 0101),
	450 mA (previous versions)
Total current for I/O modules (5 V)	1700 mA
	(as from version 0101),
	1550 mA (previous versions)
Isolation	500 V system/supply
Voltage via power jumper contacts	24 V DC (-15 % ... +20 %)
Current via power jumper contacts (max.)	10 A DC

General Specifications

Operating temperature	0 °C ... +55 °C
Wire connection	CAGE CLAMP®
Cross sections	0.08 mm² ... 2.5 mm² / AWG 28 ... 14
Strip lengths	8 ... 9 mm / 0.33 in
Dimensions (mm) W x H x L	51 x 65 x 100
	Height from upper-edge of DIN 35 rail
Weight	192 g
Storage temperature	-25 °C ... +85 °C
Relative air humidity (no condensation)	95 %
Vibration resistance	acc. to IEC 60068-2-6
Shock resistance	acc. to IEC 60068-2-27
Degree of protection	IP20
EMC immunity of interference	acc. to EN 61000-6-2
EMC emission of interference	acc. to EN 61000-6-4

INTERBUS ECO Fieldbus Coupler

500 Kbaud; digital and analog signals

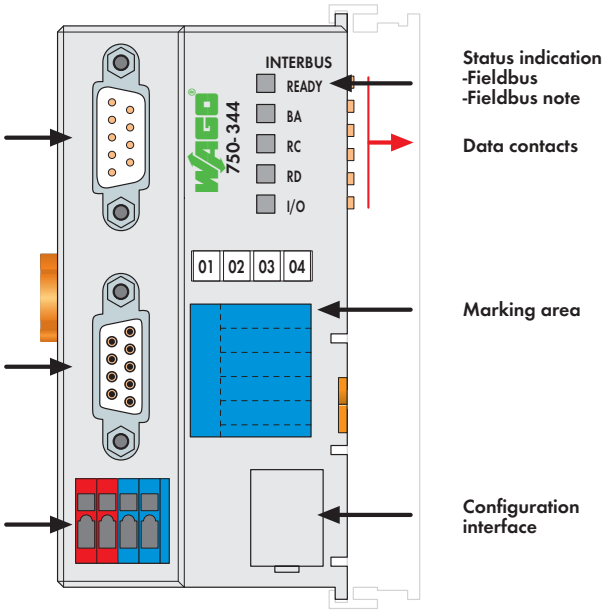

The ECO fieldbus coupler is designed for applications with a reduced scale I/O requirement. Using digital only process data or small amounts of analogs, while retaining all of the choice that's offered by the Series 750 I/O.

The coupler has an integrated supply terminal for the system voltage. The field power jumper contacts are supplied via a separate supply module.

The INTERBUS bus coupler automatically configures, creating a local process image which may include analog, digital or specialty modules.

INTERBUS stores the process image in the corresponding Master control (PLC, PC or NC).

The local process image is divided into two data zones containing the data received and the data to be sent. The process data can be sent via the INTERBUS fieldbus to the PLC, PC or NC for further processing, and received from the field via INTERBUS.

The data of the analog modules is stored in the process image which is created automatically according to the order in which the modules are connected to the buscoupler. The bits of the digital modules are sent byte by byte and added to the analog data. If the amount of digital information exceeds 8 bits, the buscoupler automatically starts with a new byte.

Description	Item No.	Pack. Unit
INTERBUS ECO 500 kBd	**750-344**	1

Accessories		Item No.	Pack. Unit
INTERBUS files		Download: www.wago.com	
Miniature WSB Quick marking system			
	plain	**248-501**	5
	with marking	see Section 11	

Standards and Approvals

Standard	EN 50254
Conformity marking	CE
Korea Certification	
UL 508	
ANSI/ISA 12.12.01	Class I, Div. 2, Grp. ABCD, T4
TÜV 12.1297 X (Brazil)	Ex nA IIC T4 Gc
TÜV 07 ATEX 554086 X	I M2 Ex d I Mb, II 3 G Ex nA IIC T4 Gc, II 3 D Ex tc IIIC T135°C Dc
IECEx TUN 09.0001 X	Ex d I Mb, Ex nA IIC T4 Gc, Ex tc IIIC T135°C Dc

System Data

No. of couplers connected to Master	256
Max. no. of I/O points	4096 (depends on master)
Transmission medium	Certified Cu cable
Max. length of fieldbus segment	400 m
Baud rate	500 Kbaud
Transmission time	typ. 1.43 ms (10 couplers; 32 digital I/Os per coupler)
Buscoupler connection	1 x D-Sub 9; plug for input interface 1 x D-Sub 9; socket for output interface

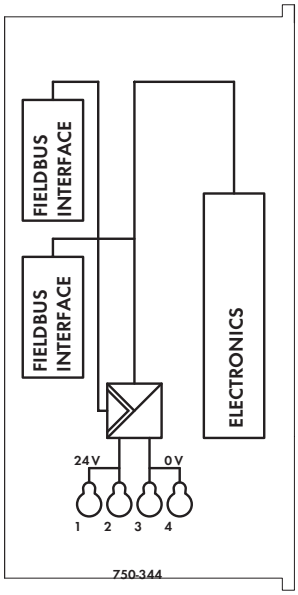

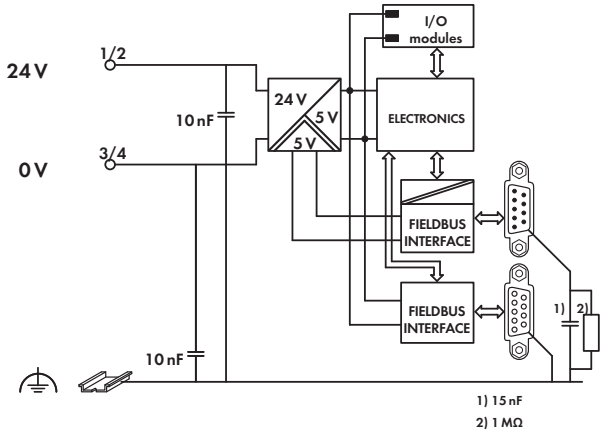

Technical Data

Number of I/O modules	64
Max. input process image	20 bytes
Max. output process image	20 bytes
Configuration	via PC or PLC
Power supply	24 V DC (-15 % ... +20 %)
Input current typ. at rated load (24 V)	260 mA
Efficiency of the power supply (typ.) at nominal load (24 V)	80 %
Internal current consumption (5 V)	350 mA
Total current for I/O modules (5 V)	650 mA

General Specifications

Operating temperature	0 °C ... +55 °C
Wire connection	CAGE CLAMP®
Cross sections	0.08 mm² ... 1.5 mm² / AWG 28 ... 16
Strip lengths	5 ... 6 mm / 0.22 in
Dimensions (mm) W x H x L	50 x 65 x 97
	Height from upper-edge of DIN 35 rail
Weight	115 g
Storage temperature	-25 °C ... +85 °C
Relative air humidity (no condensation)	95 %
Vibration resistance	acc. to IEC 60068-2-6
Shock resistance	acc. to IEC 60068-2-27
Degree of protection	IP20
EMC immunity of interference	acc. to EN 61000-6-2
EMC emission of interference	acc. to EN 61000-6-4

INTERBUS ECO Fieldbus Coupler

2 Mbaud; digital and analog signals

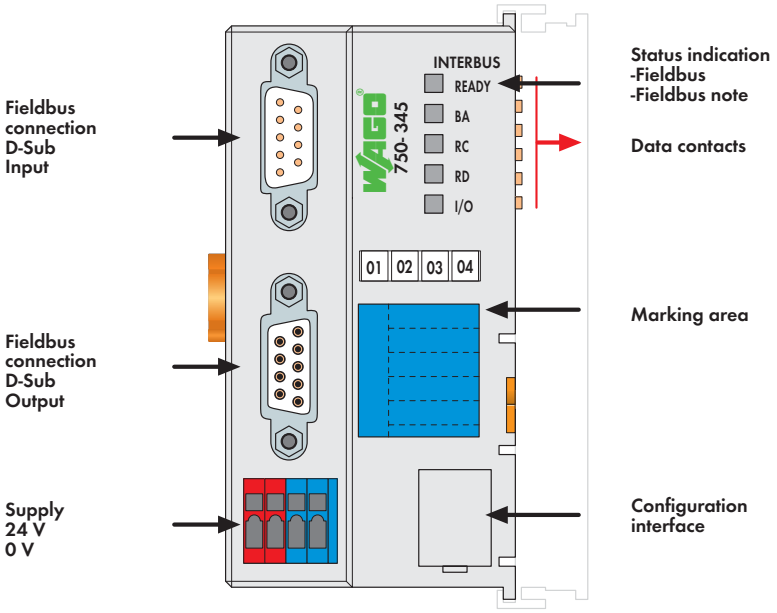

This buscoupler connects the WAGO-I/O-SYSTEM as a slave to the INTERBUS fieldbus.

The buscoupler automatically configures, creating a local process image which may include analog, digital or specialty modules. Analog and specialty module data is sent via words and/or bytes, digital data is sent bit by bit.

INTERBUS stores the process image in the corresponding Master control (PLC, PC or NC).

The local process image is divided into two data zones containing the data received and the data to be sent. The process data can be sent via the INTERBUS fieldbus to the PLC, PC or NC for further processing, and received from the field via INTERBUS.

The data of the analog modules is stored in the process image which is created automatically according to the order in which the modules are connected to the buscoupler. The bits of the digital modules are sent byte by byte and added to the analog data. If the amount of digital information exceeds 8 bits, the buscoupler automatically starts with a new byte.

Description	Item No.	Pack. Unit
INTERBUS ECO 2 MBd	**750-345**	1

Accessories		Item No.	Pack. Unit
INTERBUS files		Download: www.wago.com	
Miniature WSB Quick marking system			
	plain	**248-501**	5
	with marking	see Section 11	

Standards and Approvals

Standard	EN 50254
Conformity marking	CE
Korea Certification	
UL 508	
ANSI/ISA 12.12.01	Class I, Div. 2, Grp. ABCD, T4
TÜV 12.1297 X (Brazil)	Ex nA IIC T4 Gc
TÜV 07 ATEX 554086 X	I M2 Ex d I Mb, II 3 G Ex nA IIC T4 Gc, II 3 D Ex tc IIIC T135°C Dc
IECEx TUN 09.0001 X	Ex d I Mb, Ex nA IIC T4 Gc, Ex tc IIIC T135°C Dc

System Data

No. of couplers connected to Master	256
Max. no. of I/O points	4096 (depends on master)
Transmission medium	Certified Cu cable
Max. length of fieldbus segment	150 m
Baud rate	2 Mbaud
Transmission time	on request
Buscoupler connection	1 x D-Sub 9; plug for input interface 1 x D-Sub 9; socket for output interface

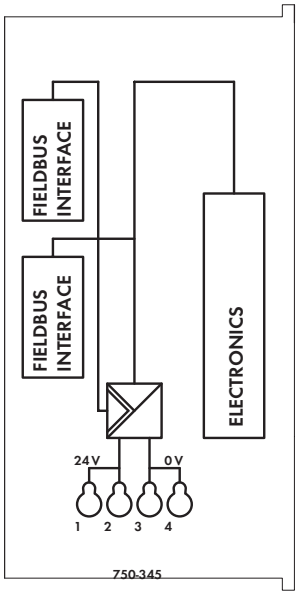

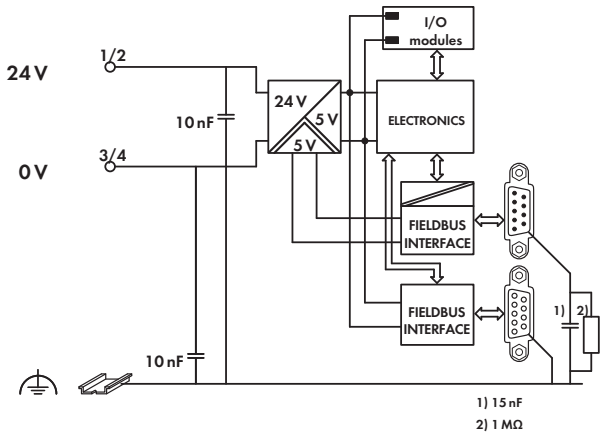

Technical Data

Number of I/O modules	64
Max. input process image	20 bytes
Max. output process image	20 bytes
Configuration	via PC or PLC
Power supply	24 V DC (-15 % ... +20 %)
Input current typ. at rated load (24 V)	260 mA
Efficiency of the power supply (typ.) at nominal load (24 V)	80 %
Internal current consumption (5 V)	350 mA
Total current for I/O modules (5 V)	650 mA

General Specifications

Operating temperature	0 °C ... +55 °C
Wire connection	CAGE CLAMP®
Cross sections	0.08 mm² ... 1.5 mm² / AWG 28 ... 16
Strip lengths	5 ... 6 mm / 0.22 in
Dimensions (mm) W x H x L	50 x 65 x 97
	Height from upper-edge of DIN 35 rail
Weight	115 g
Storage temperature	-25 °C ... +85 °C
Relative air humidity (no condensation)	95 %
Vibration resistance	acc. to IEC 60068-2-6
Shock resistance	acc. to IEC 60068-2-27
Degree of protection	IP20
EMC immunity of interference	acc. to EN 61000-6-2
EMC emission of interference	acc. to EN 61000-6-4

INTERBUS Fieldbus Coupler

digital and analog signals; fiber optic

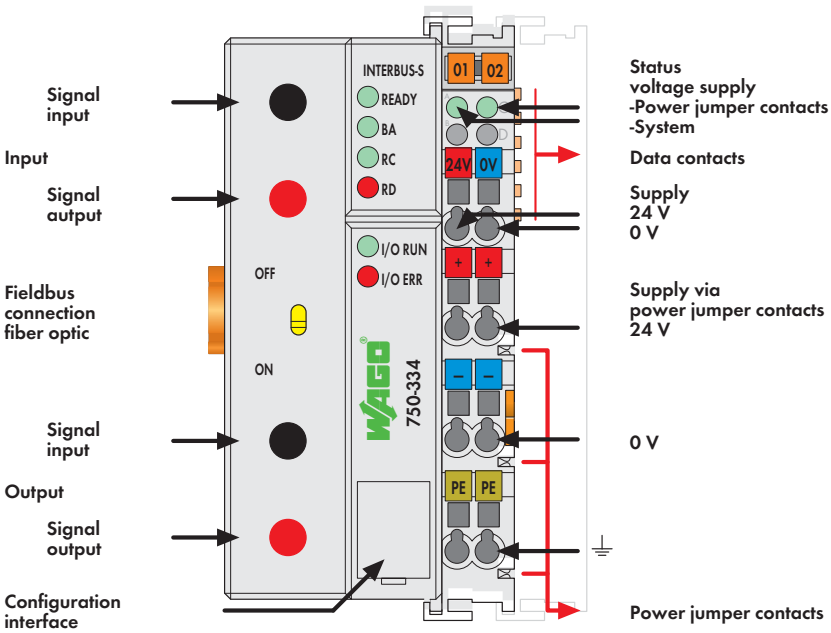

This buscoupler connects the WAGO-I/O-SYSTEM as a slave to the INTERBUS fieldbus.

The buscoupler automatically configures, creating a local process image which may include analog, digital or specialty modules. Analog and specialty module data is sent via words and/or bytes, digital data is sent bit by bit.

The local process image is divided into two data zones containing the data received and the data to be sent. The process data can be sent via the INTERBUS fieldbus to the PLC, PC or NC for further processing, and received from the field via INTERBUS.

The data of the analog modules is stored in the process image which is created automatically according to the order in which the modules are connected to the buscoupler. The bits of the digital modules are sent byte by byte and added to the analog data. If the amount of digital information exceeds 8 bits, the buscoupler automatically starts with a new byte.

The fiber optic INTERBUS coupler can be put in any place on the ring.

Description	Item No.	Pack. Unit
INTERBUS 500 kBd / Opt. Fiber	**750-334**	1

Accessories	Item No.	Pack. Unit
INTERBUS files	Download: www.wago.com	
Miniature WSB Quick marking system		
plain	**248-501**	5
with marking	see Section 11	

Standards and Approvals

Standard	EN 50254
Certification	INTERBUS CLUB
Conformity marking	CE
Korea Certification	
UL 508	
ANSI/ISA 12.12.01	Class I, Div. 2, Grp. ABCD, T4
TÜV 12.1297 X (Brazil)	Ex nA IIC T4 Gc
DEKRA 11 ATEX 0203 X	II 3 G Ex nA II T4

System Data

No. of couplers connected to Master	256
Max. no. of I/O points	4096 (depends on master)
Transmission medium	APF (plastic) fiber (1000µm)
Topology	Ring, double fiber ring
Max. length of fieldbus segment	1 m ... 40 m
Baud rate	500 Kbaud
Buscoupler connection	F- SMA

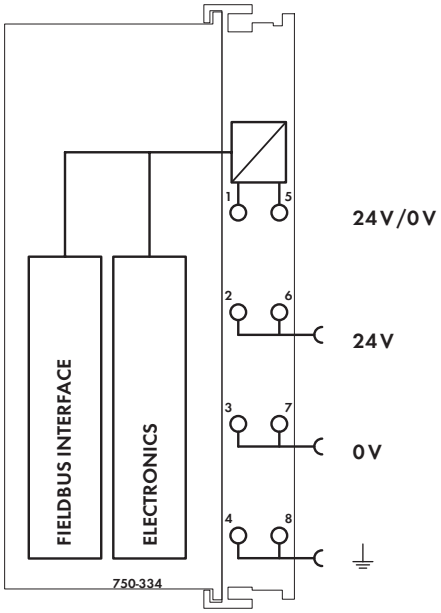

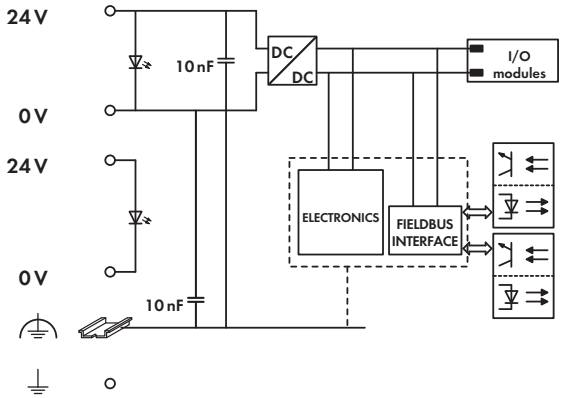

Technical Data

Number of I/O modules	64
Max. input process image	64 bytes
Max. output process image	64 bytes
Configuration	via PC or PLC
Power supply	24 V DC (-15 % ... +20 %)
Max. input current (24 V)	500 mA
Power supply efficiency	87 %
Internal current consumption (5 V)	350 mA
Total current for I/O modules (5 V)	1650 mA
Isolation	500 V system/supply
Voltage via power jumper contacts	24 V DC (-15 % ... +20 %)
Current via power jumper contacts (max.)	10 A DC

General Specifications

Operating temperature	0 °C ... +55 °C
Wire connection	CAGE CLAMP®
Cross sections	0.08 mm² ... 2.5 mm² / AWG 28 ... 14
Strip lengths	8 ... 9 mm / 0.33 in
Dimensions (mm) W x H x L	51 x 65 x 100
	Height from upper-edge of DIN 35 rail
Weight	189.8 g
Storage temperature	-25 °C ... +85 °C
Relative air humidity (no condensation)	95 %
Vibration resistance	acc. to IEC 60068-2-6
Shock resistance	acc. to IEC 60068-2-27
Degree of protection	IP20
EMC immunity of interference	acc. to EN 61000-6-2
EMC emission of interference	acc. to EN 61000-6-4

Switch

OFF	Fieldbus coupler is the last fieldbus device
ON	Output fieldbus interface is active

CC-Link Fieldbus Coupler

156 Kbaud ... 10 Mbaud; digital and analog signals

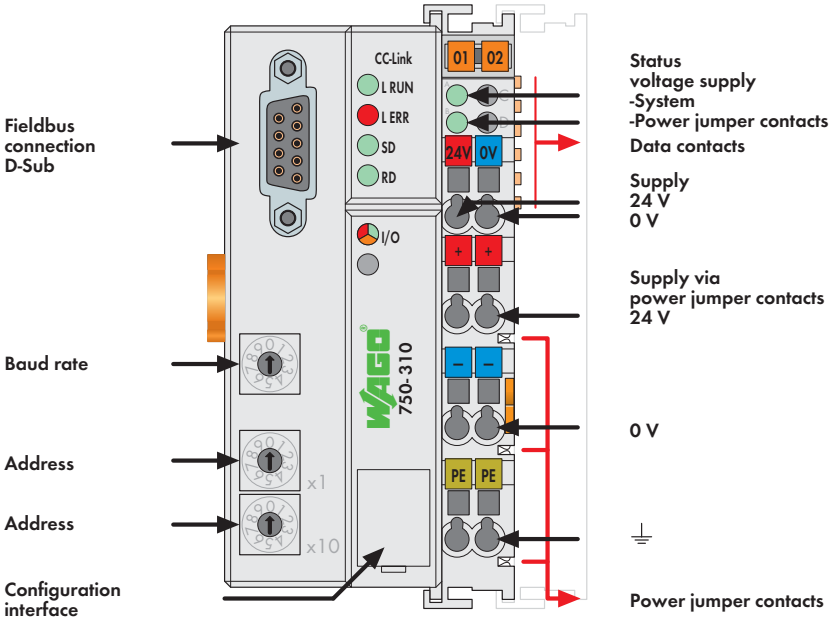

This buscoupler connects the WAGO-I/O-SYSTEM as a slave to the CC-Link fieldbus.

The buscoupler automatically configures, creating a local process image which may include analog, digital or specialty modules. Analog and specialty module data is sent via words and/or bytes, digital data is sent bit by bit.

CC-Link stores the process image in the corresponding Master control (PLC, PC or NC).

The local process image is divided into two data zones containing the data received and the data to be sent. The process data can be sent via the CC-Link fieldbus to the PLC, PC or NC for further processing, and received from the field via CC-Link.

The data of the analog modules is stored in the process image which is created automatically according to the order in which the modules are connected to the buscoupler. The bits of the digital modules are sent byte by byte and added to the analog data. If the amount of digital information exceeds 8 bits, the buscoupler automatically starts with a new byte.

Description	Item No.	Pack. Unit
CC-Link	**750-310**	1

Accessories		Item No.	Pack. Unit
Miniature WSB Quick marking system			
	plain	**248-501**	5
	with marking	see Section 11	
Bus connector with D-Sub male connector; 9 poles		**750-965**	1

Approvals

Conformity marking	CE
Korea Certification	
UL 508	
ANSI/ISA 12.12.01	Class I, Div. 2, Grp. ABCD, T4
TÜV 07 ATEX 554086 X	I M2 Ex d I Mb, II 3 G Ex nA IIC T4 Gc, II 3 D Ex tc IIIC T135°C Dc
IECEx TUN 09.0001 X	Ex d I Mb, Ex nA IIC T4 Gc, Ex tc IIIC T135°C Dc

System Data

No. of couplers connected to Master	64
Transmission medium	Shielded Cu cable 2 / 3 x 0.5 mm²
Max. length of bus line	100 m ... 1200 m (depends on baud rate/cable)
Baud rate	156 Kbaud ... 10 Mbaud
Buscoupler connection	1 x D-Sub 9; socket

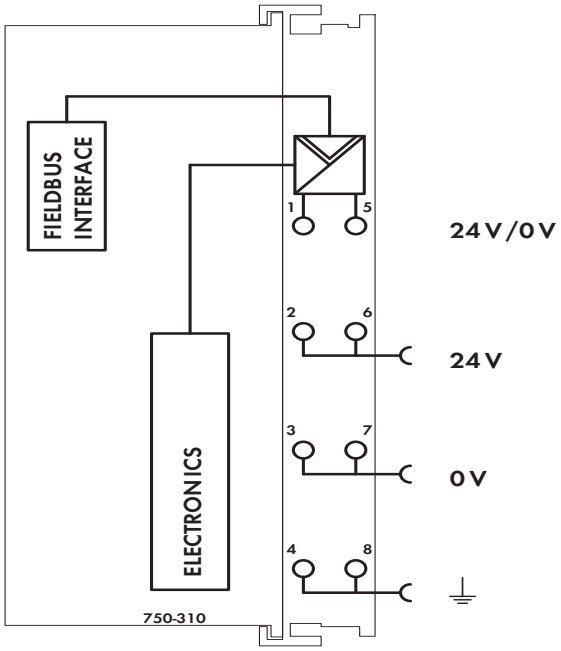

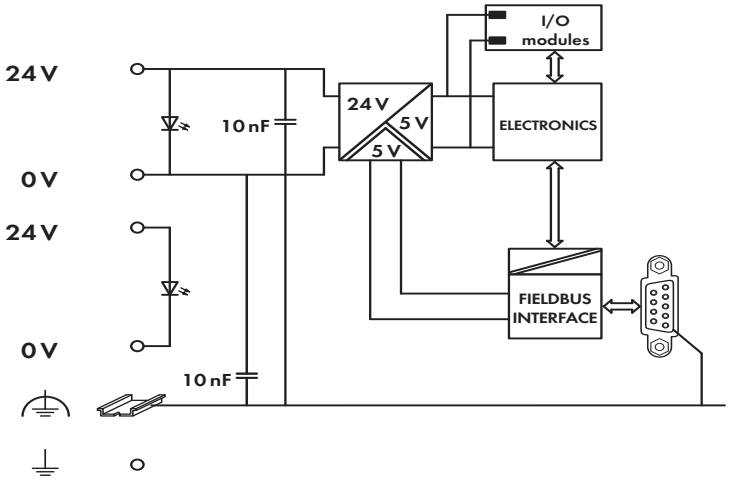

Technical Data

Number of I/O modules	64
Station addresses	up to 4
Max. input process image	14-byte digital,
	2-byte system,
	32-byte analog
Max. output process image	14-byte digital,
	2-byte system,
	32-byte analog
Power supply	24 VDC (-25 % ... +30 %)
Max. input current (24 V)	500 mA
Power supply efficiency	87 %
Internal current consumption (5 V)	300 mA
Total current for I/O modules (5 V)	1700 mA
Isolation	500 V system/supply
Voltage via power jumper contacts	24 VDC (-25 % ... +30 %)
Current via power jumper contacts (max.)	10 A DC

General Specifications

Operating temperature	0 °C ... +55 °C
Wire connection	CAGE CLAMP®
Cross sections	0.08 mm² ... 2.5 mm² / AWG 28 ... 14
Strip lengths	8 ... 9 mm / 0.33 in
Dimensions (mm) W x H x L	51 x 65 x 100
	Height from upper-edge of DIN 35 rail
Weight	210 g
Storage temperature	-25 °C ... +85 °C
Relative air humidity (no condensation)	95 %
Vibration resistance	acc. to IEC 60068-2-6
Shock resistance	acc. to IEC 60068-2-27
Degree of protection	IP20
EMC immunity of interference	acc. to EN 61000-6-2
EMC emission of interference	acc. to EN 61000-6-4

Digital Input Modules

Housing Design 750/753 Series	
Dimensions (mm) W x H x L	12 x 65 x 100 (Height from upper edge of the DIN-rail)
Wire connection	CAGE CLAMP®
Cross sections	0.08 mm² ... 2.5 mm² / 28 ... 14 AWG
Strip lengths	750 Series: 8 ... 9 mm / 0.33 in. 753 Series: 9 ... 10 mm / 0.37 in.

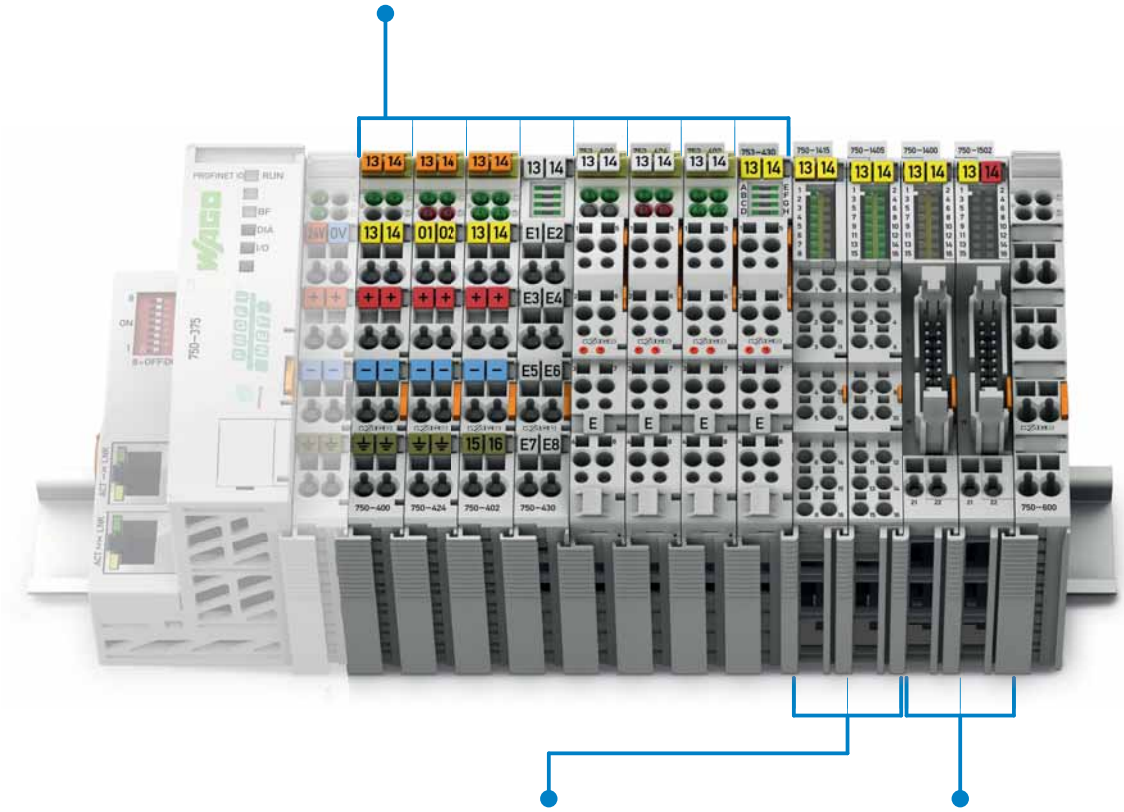

Housing Design 750 Series with Push-in CAGE CLAMP® Connection (16 Connection Terminals)	
Wire connection	Push-in CAGE CLAMP®
Cross sections	solid: 0.08 mm² ... 2.5 mm² / 28 ... 16 AWG fine-stranded: 0.25 mm² ... 1.5 mm² / 22 ... 16 AWG
Strip lengths	8 ... 9 mm / 0.33 in.

Housing Design 750 Series with Ribbon Cable Connector	
Dimensions (mm) W x H x L	12 x 73 x 100 (Height from upper edge of the DIN-rail)
Wire connection	20-pole male connector/CAGE CLAMP®

PROFIsafe

I/O-Systems; Digital Input Modules

Contents

Function	2-Channel DI	4-Channel DI	8-Channel DI	8-Channel DIO	16-Channel DI	Description	Item No.			Page
							Standard	/T Extended operating temperature range: -20 °C ... +60 °C	Pluggable	
5 VDC		☐				0.2 ms, high-side switch.	750-414			184
5/12 VDC			☐			(5 ... 14 VDC) 0.2 ms, high-side switch.			753-434	185
24 VDC	☐					3.0 ms, high-side switch.	750-400	750-400/025-000	753-400	186
	☐					0.2 ms, high-side switch.	750-401		753-401	186
	☐					3.0 ms, high-side switch., proximity switch	750-410		753-410	187
	☐					0.2 ms, high-side switch., proximity switch	750-411		753-411	187
	☐					3.0 ms, high-side switch., diagnostics, acknol.	750-418		753-418	188
	☐					3.0 ms, high-side switch., diagnostics	750-421		753-421	188
	☐					NAMUR, Proximity switch acc. to DIN EN 60947-5-6	750-425		753-425	215
	☐					Intruder detection	750-424		753-424	216
		☐				3.0 ms, high-side switch.	750-402	750-402/025-000	753-402	189
		☐				0.2 ms, high-side switch.	750-403		753-403	189
		☐				3.0 ms, high-side switch.	750-432		753-432	190
		☐				0.2 ms, high-side switch.	750-433		753-433	190
		☐				Pulse extension, 10 ms	750-422		753-422	191
		☐				3.0 ms, low-side switch.	750-408	750-408/025-000	753-408	192
		☐				0.2 ms, low-side switch.	750-409		753-409	192
		☐				3.0 ms, 3-conductor	750-1420			193
		☐				0.2 ms, 3-conductor	750-1421			193
		☐				3.0 ms, low-side switch., 3-conductor	750-1422			194
		☐				0.2 ms, low-side switch., 3-conductor	750-1423			194
			☐			3.0 ms, high-side switch.	750-430	750-430/025-000	753-430	195
			☐			0.2 ms, high-side switch.	750-431		753-431	195
			☐			3.0 ms, low-side switch.	750-436		753-436	196
			☐			0.2 ms, low-side switch.	750-437		753-437	196
			☐			3.0 ms, 2-conductor	750-1415			199
			☐			0.2 ms, 2-conductor	750-1416			199
			☐			3.0 ms, low-side switch., 2-conductor	750-1417			200
			☐			0.2 ms, low-side switch., 2-conductor	750-1418			200
				☐		0.5 A, high-side switch., ribbon cable	750-1502			197
				☐		0.5 A, high-side switch.	750-1506			198
					☐	3.0 ms, high-side switch., ribbon cable	750-1400			201
					☐	3.0 ms, high-side switch.	750-1405			202
					☐	0.2 ms, high-side switch.	750-1406			202
					☐	3.0 ms, low-side switch., ribbon cable	750-1402			203
					☐	3.0 ms, low-side switch.	750-1407			204
24 V AC/DC		☐				20 ms	750-415		753-415	205
		☐				50 ms, power jumper contacts	750-423		753-423	206
42 V AC/DC		☐				20 ms	750-428		753-428	207
48 VDC	☐					3.0 ms, high-side switch.	750-412		753-412	208
60 VDC	☐					3.0 ms, high-side switch.			753-429	209
110 VDC	☐					3.0 ms, high-side switch. or low-side switch.	750-427		753-427	210
220 VDC	☐					3.0 ms, high-side switch.	750-407			211
120 VAC	☐					10 ms, high-side switch.	750-406		753-406	212
120/230 VAC		☐				(120 ... 230 VAC) 10 ms, high-side switch.			753-440	213
230 VAC	☐					10 ms, high-side switch.	750-405		753-405	214
PTC			☐			Connects to PTC thermistors according to DIN 44081/44082	750-1425			217
Functional Safety							see Section 4.8			
Ex i							see Section 4.9			

4-Channel Digital Input Module 5 V DC

2- to 3-conductor connection; high-side switching

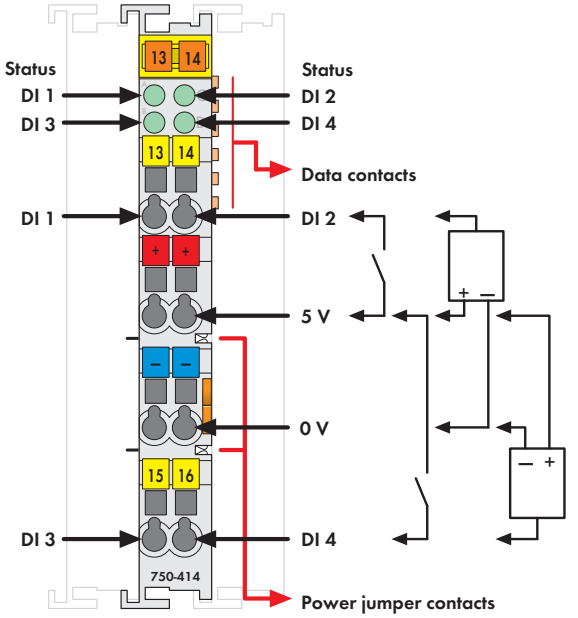

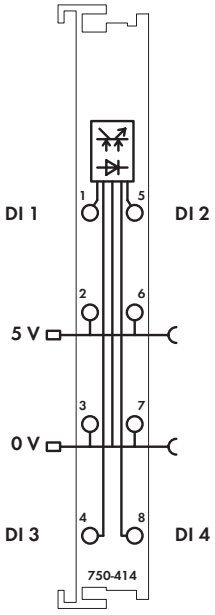

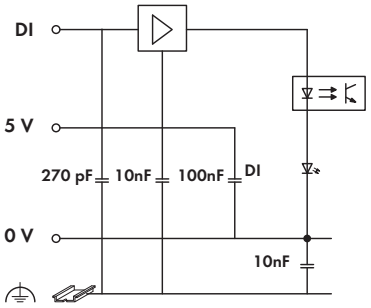

Delivered without miniature WSB markers

The digital input module receives control signal from the digital field devices (sensors, etc.).

Each input module has a noise-rejection filter.

Field and system levels are electrically isolated.

Notice:
An additional supply module must be added for operation with 5VDC!

Description	Item No.	Pack. Unit
4DI 5V DC 0.2ms	**750-414**	1

Accessories		Item No.	Pack. Unit
Miniature WSB Quick marking system			
	plain	**248-501**	5
	with marking	see Section 11	

Approvals

Conformity marking	CE
Korea Certification	
UL 508	
ANSI/ISA 12.12.01	Class I, Div. 2, Grp. ABCD, T4

Technical Data

Number of inputs	4
Current consumption (internal)	5 mA
Voltage via power jumper contacts	5 V DC
Signal voltage (0)	0 V ... +0.8 V DC
Signal voltage (1)	2.4 V ... 5 V DC
Input filter	0.2 ms
Input current (typ.)	50 µA
Isolation	500 V system/supply
Internal bit width	4 bits
Wire connection	CAGE CLAMP®
Cross sections	0.08 mm² ... 2.5 mm² / AWG 28 ... 14
Strip lengths	8 ... 9 mm / 0.33 in
Width	12 mm
Weight	49.5 g
EMC immunity of interference	acc. to EN 61000-6-2
EMC emission of interference	acc. to EN 61000-6-4

8-Channel Digital Input Module 5 … 14 V DC

1-conductor connection; high-side switching

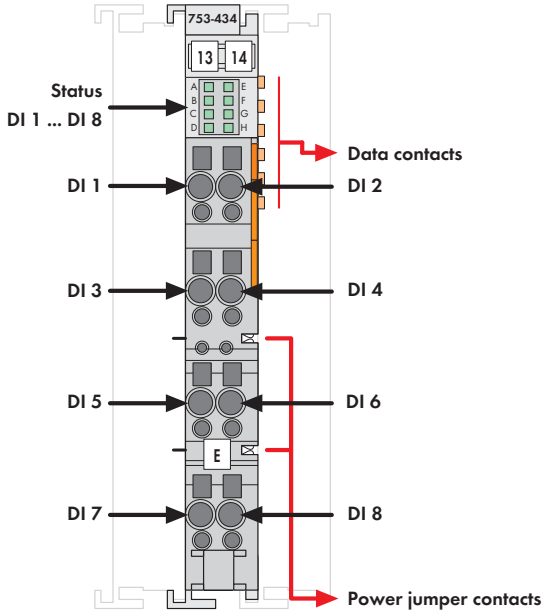

Delivered without miniature WSB markers

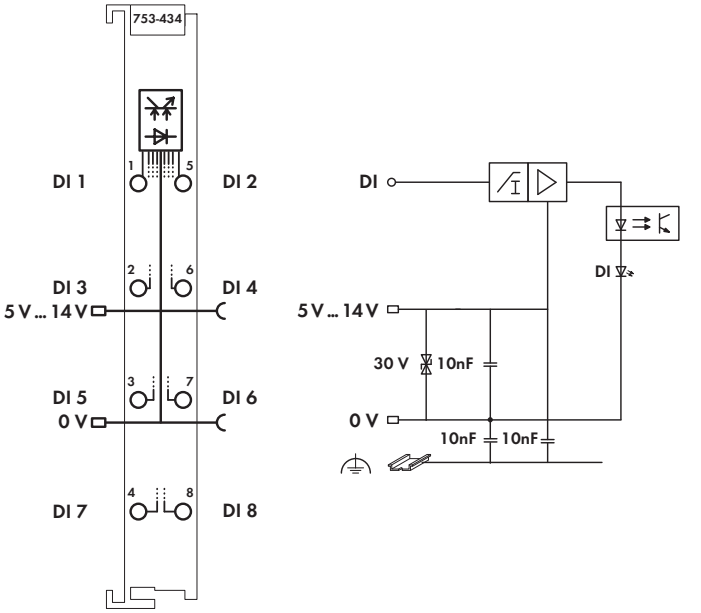

NOTE: Connection point marking (i.e., 1 … 8) does not refer to channel assignment

The digital input module provides 8 channels at a width of just 12mm (0.47in.).
It receives control signals from the digital field devices (sensors, etc.).

Each input module has a noise-rejection filter.

Field and system levels are electrically isolated.

Notice:
An additional supply module must be added for operation with 5–14VDC!

Description	Item No.	Pack. Unit
8DI 5 (14)V DC 0.2ms (without connector)	**753-434**	1

Accessories		Item No.	Pack. Unit
	753 Series Connectors	**753-110**	25
	Coding elements	**753-150**	100
	Miniature WSB Quick marking system		
	plain	**248-501**	5
	with marking	see Section 11	

Approvals

Conformity marking	CE
Korea Certification	KC
Marine applications	GL
cULus UL 508	
cULus ANSI/ISA 12.12.01	Class I, Div. 2, Grp. ABCD, T4
TÜV 07 ATEX 554086 X	I M2 Ex d I Mb, II 3 G Ex nA IIC T4 Gc, II 3 D Ex tc IIIC T135°C Dc
IECEx TUN 09.0001 X	Ex d I Mb, Ex nA IIC T4 Gc, Ex tc IIIC T135°C Dc

Technical Data

Number of inputs	8
Current consumption (internal)	4 mA
Voltage via power jumper contacts	5 V … 14 V DC (-15 % … +20 %)
Signal voltage (0)	-3 V DC … 0.2 x V_V
Signal voltage (1)	0.5 V_V … 1.1 V_V
Input filter	0.2 ms
Input current (typ.)	60 µA at 12 V
Input resistance	> 100 kΩ
Isolation	500 V system/supply
Internal bit width	8 bits
Wire connection	CAGE CLAMP®
Cross sections	0.08 mm² … 2.5 mm² / AWG 28 … 14
Strip lengths	9 … 10 mm / 0.37 in
Width	12 mm
Weight	41.2 g
EMC immunity of interference	acc. to EN 61131-2, marine applications
EMC emission of interference	acc. to EN 61131-2, marine applications

2-Channel Digital Input Module 24 V DC

2- to 4-conductor connection; high-side switching

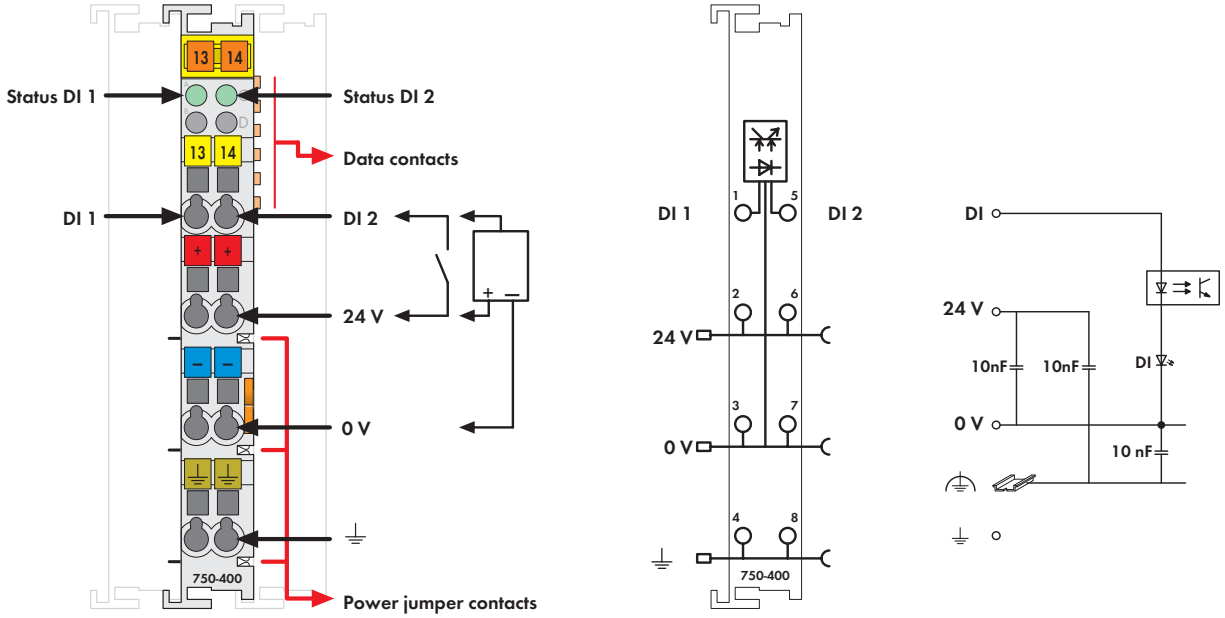

Fig. 750 Series
Delivered without miniature WSB markers

The digital input module receives control signal from the digital field devices (sensors, etc.).

Each input module has a noise-rejection filter. This filter is available with different time constants.

Field and system levels are electrically isolated.

Description	Item No.	Pack. Unit
2DI 24V DC 3.0ms	**750-400**	1
2DI 24V DC 0.2ms	**750-401**	1
2DI 24V DC 3.0ms	**750-400/025-000**	1
Extended temperature range: -20 °C ... +60 °C		
2DI 24V DC 3.0ms (without connector)	**753-400**	1
2DI 24V DC 0.2ms (without connector)	**753-401**	1

Accessories		Item No.	Pack. Unit
	753 Series Connectors	**753-110**	25
	Coding elements	**753-150**	100
	Miniature WSB Quick marking system		
	plain	**248-501**	5
	with marking	see Section 11	

Approvals

Conformity marking	CE
Korea Certification	
Marine applications (versions upon request)	ABS, BV, DNV, GL, KR, LR, NKK, PRS,
UL 508	
ANSI/ISA 12.12.01	Class I, Div. 2, Grp. ABCD, T4
TÜV 07 ATEX 554086 X	I M2 Ex d I Mb,
	II 3 G Ex nA IIC T4 Gc,
	II 3 D Ex tc IIIC T135°C Dc
IECEx TUN 09.0001 X	Ex d I Mb,
	Ex nA IIC T4 Gc,
	Ex tc IIIC T135°C Dc

Technical Data

Number of inputs	2
Current consumption (internal)	3.7 mA
Voltage via power jumper contacts	24 V DC (-25 % ... +30 %)
Signal voltage (0)	-3 V ... +5 V DC
Signal voltage (1)	15 V ... 30 V DC
Input filter	3.0 ms (750-400 / 753-400)
	0.2 ms (750-401 / 753-401)
Input current (typ.)	4.5 mA
Isolation	500 V system/supply
Internal bit width	2 bits
Wire connection	CAGE CLAMP®
Cross sections	0.08 mm² ... 2.5 mm² / AWG 28 ... 14
Strip lengths, 750/753 Series	8 ... 9 mm / 0.33 in
	9 ... 10 mm / 0.37 in
Width	12 mm
Weight	46.7 g
EMC immunity of interference	acc. to EN 61000-6-2, marine applications
EMC emission of interference	acc. to EN 61000-6-4, marine applications

2-Channel Digital Input Module 24 V DC

2- to 4-conductor connection; high-side switching

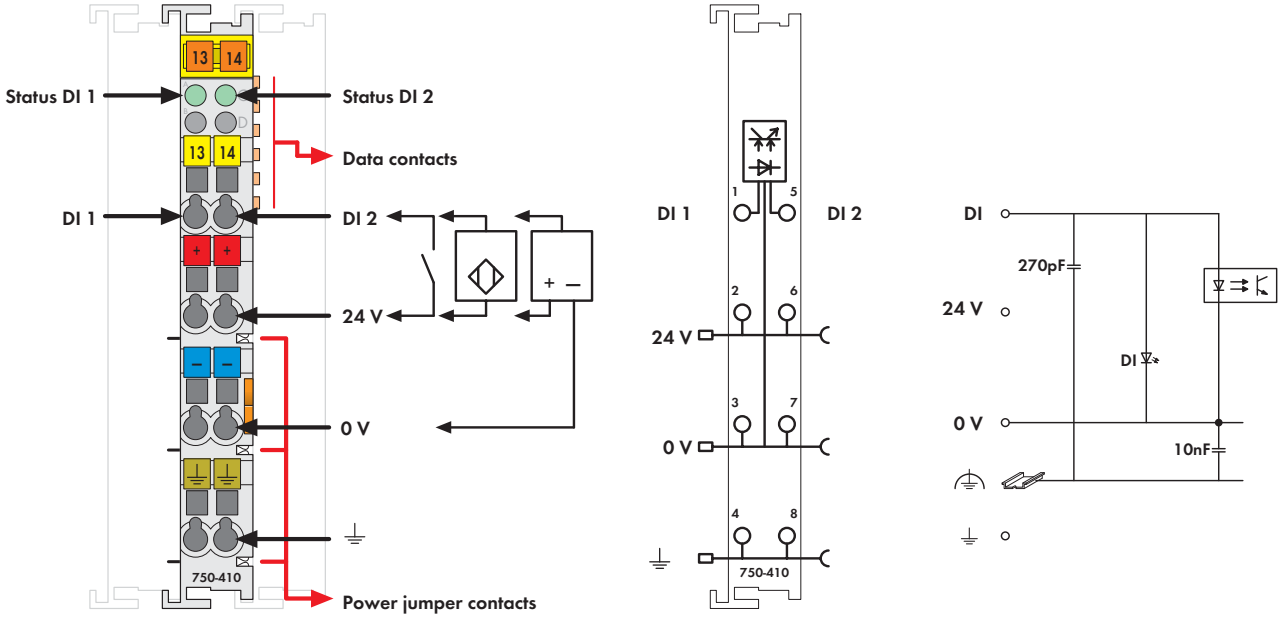

Fig. 750 Series
Delivered without miniature WSB markers

The digital input module receives control signal from the digital field devices (sensors, etc.).

Each input module has a noise-rejection filter. This filter is available with different time constants.

Field and system levels are electrically isolated.

A 2-wire proximity switch can be connected to this module.

Description	Item No.	Pack. Unit
2DI 24V DC 3.0ms, proximity switch	**750-410**	1
2DI 24V DC 0.2ms, proximity switch	**750-411**	1
2DI 24V DC 3.0ms, proximity switch (without connector)	**753-410**	1
2DI 24V DC 0.2ms, proximity switch (without connector)	**753-411**	1

Accessories

	Item No.	Pack. Unit
753 Series Connectors	**753-110**	25
Coding elements	**753-150**	100
Miniature WSB Quick marking system		
plain	**248-501**	5
with marking	see Section 11	

Approvals

Conformity marking	CE
Korea Certification	
Marine applications	ABS, BV, DNV, GL, KR, LR, NKK, PRS, RINA
cULus UL 508	
cULus ANSI/ISA 12.12.01	Class I, Div. 2, Grp. ABCD, T4
TÜV 07 ATEX 554086 X	I M2 Ex d I Mb, II 3 G Ex nA IIC T4 Gc, II 3 D Ex tc IIIC T135°C Dc
IECEx TUN 09.0001 X	Ex d I Mb, Ex nA IIC T4 Gc, Ex tc IIIC T135°C Dc

Technical Data

Number of inputs	2
Max. current consumption (internal)	2.5 mA
Voltage via power jumper contacts	24 V DC (-25 % ... +30 %)
Signal voltage (0)	-3 V ... +5 V DC
Signal voltage (1)	15 V ... 30 V DC
Input filter	3.0 ms (750-410 / 753-410)
	0.2 ms (750-411 / 753-411)
Input current (typ.)	8 mA
Isolation	500 V system/supply
Internal bit width	2 bits
Wire connection	CAGE CLAMP®
Cross sections	0.08 mm² ... 2.5 mm² / AWG 28 ... 14
Strip lengths, 750/753 Series	8 ... 9 mm / 0.33 in
	9 ... 10 mm / 0.37 in
Width	12 mm
Weight	48.5 g
EMC immunity of interference	acc. to EN 61000-6-2, marine applications
EMC emission of interference	acc. to EN 61000-6-4, marine applications

2-Channel Digital Input Module 24 V DC

2- to 3-conductor connection; high-side switching; diagnostics

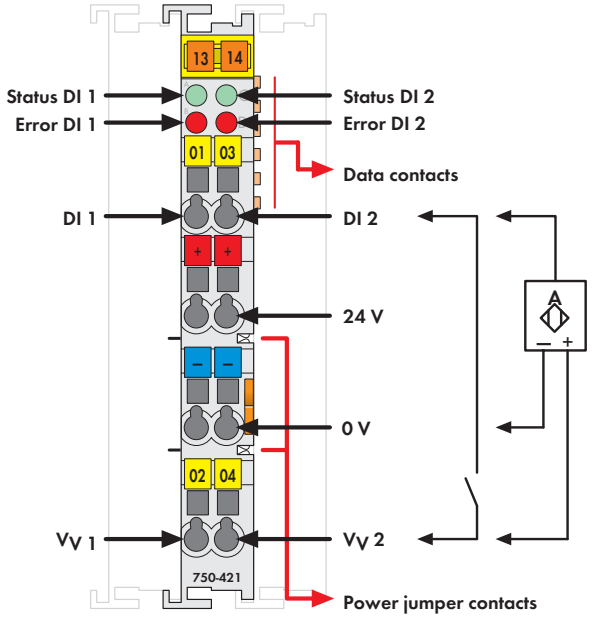

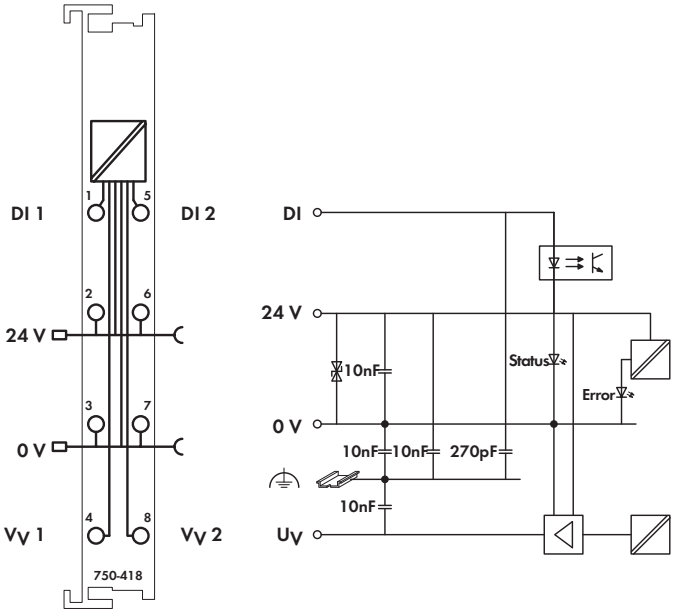

Fig. 750 Series
Delivered without miniature WSB markers

The digital input module receives control signals from digital field devices and supplies sensors with power protected against short-circuits. The module transfers the control signals and other information via fieldbus coupler to a supervisory control.

Each input module has a noise-rejection filter.

Each sensor can be supplied separately. A short circuit to ground is indicated as an error/fieldbus failure and a message is sent to the supervisory control. The error is canceled automatically via the control system after it has been rectified. (Active acknowledgement by a user)

Field and system levels are electrically isolated.

Description	Item No.	Pack. Unit
2DI 24V DC 3.0ms, diagnostics, acknowledgement	**750-418**	1
2DI 24V DC 3.0ms, diagnostics	**750-421**	1
2DI 24V DC 3.0ms, diagnostics, acknowledgement (without connector)	**753-418**	1
2DI 24V DC 3.0ms, diagnostics (without connector)	**753-421**	1

Accessories		Item No.	Pack. Unit
	753 Series Connectors	**753-110**	25
	Coding elements	**753-150**	100
	Miniature WSB Quick marking system		
	plain	**248-501**	5
	with marking	see Section 11	

Approvals

Conformity marking	CE
Korea Certification	
Marine applications	ABS, BV, DNV, GL, KR, LR, NKK, PRS, RINA
cULus UL 508	
cULus ANSI/ISA 12.12.01	Class I, Div. 2, Grp. ABCD, T4
TÜV 12.1297 X (Brazil)	Ex nA IIC T4 Gc (750-418)
TÜV 07 ATEX 554086 X	I M2 Ex d I Mb, II 3 G Ex nA IIC T4 Gc, II 3 D Ex tc IIIC T135°C Dc
IECEx TUN 09.0001 X	Ex d I Mb, Ex nA IIC T4 Gc, Ex tc IIIC T135°C Dc

Technical Data

Number of inputs	2
No. of outputs	2 for transmitter supply
Current consumption (internal)	< 12 mA
Voltage via power jumper contacts	24 V DC (-25 % ... +30 %)
Signal voltage (0)	-3 V ... +5 V DC
Signal voltage (1)	15 V ... 30 V DC
Input filter	3.0 ms
Input current (typ.)	3.7 mA
Short-circuit current	1.5 A, undulating because of thermal overload protection
Sensor supply V_V	DC24 V
Max. output current	0.5 A
Isolation	500 V system/supply
Internal bit width	4 bits in; 4 bits out (750-418 / 753-418) 4 bits in (750-421 / 753-421)
Wire connection	CAGE CLAMP®
Cross sections	0.08 mm² ... 2.5 mm² / AWG 28 ... 14
Strip lengths, 750/753 Series	8 ... 9 mm / 0.33 in 9 ... 10 mm / 0.37 in
Width	12 mm
Weight	51 g
EMC immunity of interference	acc. to EN 61000-6-2, marine applications
EMC emission of interference	acc. to EN 61000-6-4, marine applications

4-Channel Digital Input Module 24 V DC

2- to 3-conductor connection; high-side switching

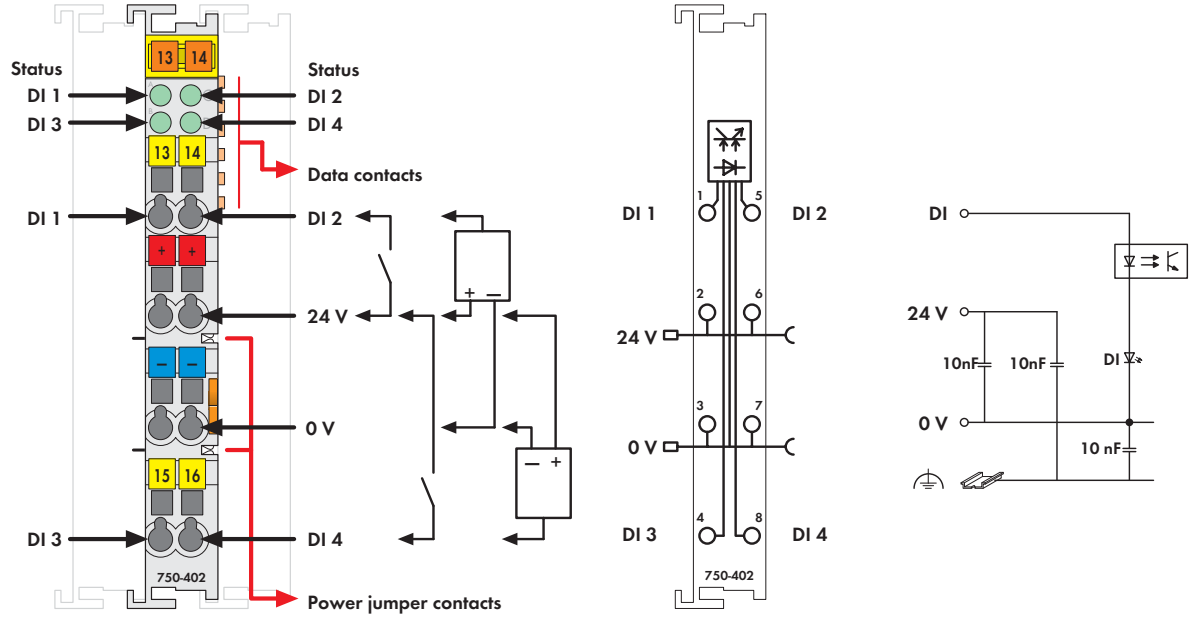

Fig. 750 Series
Delivered without miniature WSB markers

The digital input module receives control signal from the digital field devices (sensors, etc.).

Each input module has a noise-rejection filter. This filter is available with different time constants.

Field and system levels are electrically isolated.

Description	Item No.	Pack. Unit
4DI 24V DC 3.0ms	**750-402**	1
4DI 24V DC 0.2ms	**750-403**	1
4DI 24V DC 3.0ms/T	**750-402/025-000**	1
Extended temperature range: -20 °C ... +60 °C		
4DI 24V DC 3.0ms (without connector)	**753-402**	1
4DI 24V DC 0.2ms (without connector)	**753-403**	1

Accessories	Item No.	Pack. Unit
753 Series Connectors	**753-110**	25
Coding elements	**753-150**	100
Miniature WSB Quick marking system		
plain	**248-501**	5
with marking	see Section 11	

Approvals

Conformity marking	CE
Korea Certification	(75x-402, 750-402/025-000)
Marine applications (versions upon request)	ABS, BV, DNV, GL, KR, LR, NKK, PRS, RINA
UL 508	
ANSI/ISA 12.12.01	Class I, Div. 2, Grp. ABCD, T4
TÜV 07 ATEX 554086 X	I M2 Ex d I Mb, II 3 G Ex nA IIC T4 Gc, II 3 D Ex tc IIIC T135°C Dc
IECEx TUN 09.0001 X	Ex d I Mb, Ex nA IIC T4 Gc, Ex tc IIIC T135°C Dc

Technical Data

Number of inputs	4
Current consumption (internal)	7.5 mA
Voltage via power jumper contacts	24 V DC (-25 % ... +30 %)
Signal voltage (0)	-3 V ... +5 V DC
Signal voltage (1)	15 V ... 30 V DC
Input filter	3.0 ms (750-402 / 753-402) 0.2 ms (750-403 / 753-403)
Input current (typ.)	4.5 mA
Isolation	500 V system/supply
Internal bit width	4 bits
Wire connection	CAGE CLAMP®
Cross sections	0.08 mm² ... 2.5 mm² / AWG 28 ... 14
Strip lengths, 750/753 Series	8 ... 9 mm / 0.33 in 9 ... 10 mm / 0.37 in
Width	12 mm
Weight	48.5 g
EMC immunity of interference	acc. to EN 61000-6-2, marine applications
EMC emission of interference	acc. to EN 61000-6-4, marine applications

4-Channel Digital Input Module 24 V DC

2-conductor connection; high-side switching

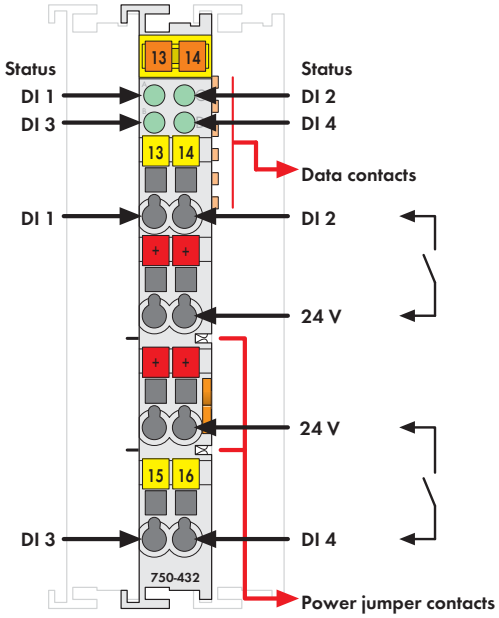

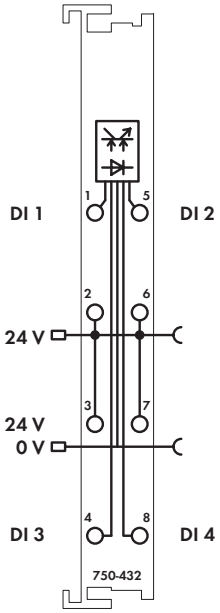

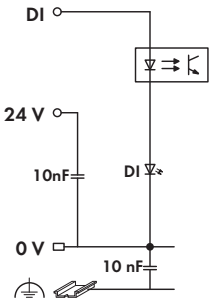

Fig. 750 Series
Delivered without miniature WSB markers

The digital input module receives control signal from the digital field devices (sensors, etc.).

The module is a 4-input channel, 2-conductor device. Due to its four 24V connections, four sensors may be directly connected to it.

Each input module has a noise-rejection filter. This filter is available with different time constants.

Field and system levels are electrically isolated.

Description	Item No.	Pack. Unit
4DI 24V DC 3.0ms/2-conductor	**750-432**	1
4DI 24V DC 0.2ms/2-conductor	**750-433**	1
4DI 24V DC 3.0ms/2-conductor (without connector)	**753-432**	1
4DI 24V DC 0.2ms/2-conductor (without connector)	**753-433**	1

Accessories	Item No.	Pack. Unit
753 Series Connectors	**753-110**	25
Coding elements	**753-150**	100
Miniature WSB Quick marking system		
plain	**248-501**	5
with marking	see Section 11	

Approvals

Conformity marking	CE
Korea Certification	
Marine applications	ABS, BV, DNV, GL, KR, LR, NKK, PRS, RINA
UL 508	
ANSI/ISA 12.12.01	Class I, Div. 2, Grp. ABCD, T4
TÜV 07 ATEX 554086 X	I M2 Ex d I Mb,
	II 3 G Ex nA IIC T4 Gc,
	II 3 D Ex tc IIIC T135°C Dc
IECEx TUN 09.0001 X	Ex d I Mb,
	Ex nA IIC T4 Gc,
	Ex tc IIIC T135°C Dc

Technical Data

Number of inputs	4
Current consumption (internal)	5.5 mA
Voltage via power jumper contacts	24 V DC (-25 % ... +30 %)
Signal voltage (0)	-3 V ... +5 V DC
Signal voltage (1)	15 V ... 30 V DC
Input filter	3.0 ms (750-432 / 753-432)
	0.2 ms (750-433 / 753-433)
Input current (typ.)	4.5 mA
Isolation	500 V system/supply
Internal bit width	4 bits in
Wire connection	CAGE CLAMP®
Cross sections	0.08 mm² ... 2.5 mm² / AWG 28 ... 14
Strip lengths, 750/753 Series	8 ... 9 mm / 0.33 in
	9 ... 10 mm / 0.37 in
Width	12 mm
Weight	48.5 g
EMC immunity of interference	acc. to EN 61000-6-2, marine applications
EMC emission of interference	acc. to EN 61000-6-3, marine applications

4-Channel Digital Input Module 24 V DC

2- to 3-conductor connection; high-side switching; 10 ms pulse extension

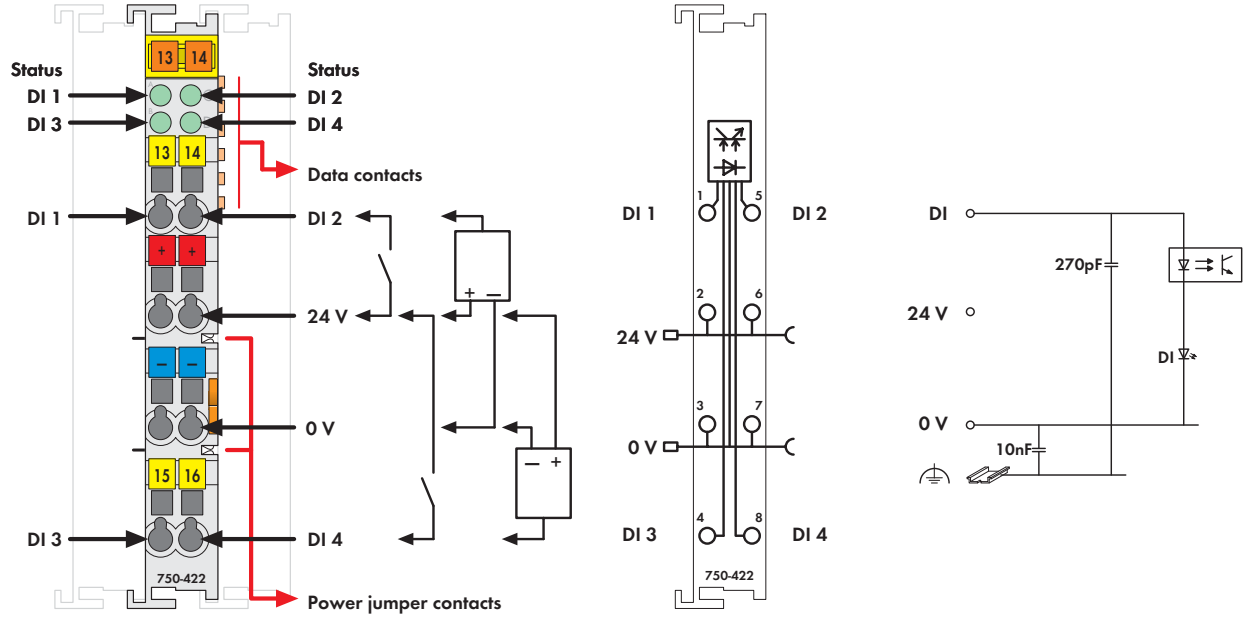

Fig. 750 Series
Delivered without miniature WSB markers

The digital input module receives control signal from the digital field devices (sensors, etc.).

This input module extends input signals to at least 10ms. Only signals ≥ 1ms will be acquired. Input signals > 10ms will not be extended (see timing technical data).

Field and system levels are electrically isolated.

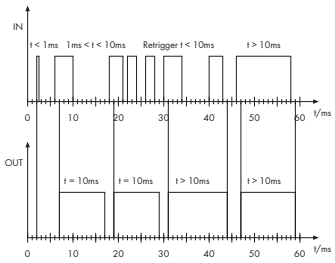

Description	Item No.	Pack. Unit
4DI 24V DC, pulse extension	**750-422**	1
4DI 24V DC, pulse extension (without connector)	**753-422**	1

Accessories

	Item No.	Pack. Unit
753 Series Connectors	**753-110**	25
Coding elements	**753-150**	100
Miniature WSB Quick marking system		
plain	**248-501**	5
with marking	see Section 11	

Approvals

Conformity marking	CE
cULus UL 508	
cULus ANSI/ISA 12.12.01	Class I, Div. 2, Grp. ABCD, T4
TÜV 12.1297 X (Brazil)	Ex nA IIC T4 Gc (750-422)
TÜV 07 ATEX 554086 X	I M2 Ex d I Mb, II 3 G Ex nA IIC T4 Gc, II 3 D Ex tc IIIC T135°C Dc
IECEx TUN 09.0001 X	Ex d I Mb, Ex nA IIC T4 Gc, Ex tc IIIC T135°C Dc

Technical Data

Number of inputs	4
Max. current consumption (internal)	9 mA
Voltage via power jumper contacts	24 V DC (-15 % ... +20 %)
Signal voltage (0)	-3 V ... +5 V DC
Signal voltage (1)	15 V ... 30 V DC
Input filter	1.0 ms (± 15 %)
Input current (typ.)	4 mA
Input frequency (max.)	80 Hz
Dead time	1 ms
t ON (IN) < 1 ms	t ON(OUT) = 0
1 ms < t ON(IN) < 10 ms	t ON(OUT) = 10 ms (± 15 %)
t ON (IN) > 10 ms	t ON(OUT) = t ON(IN)
Pulse extension	see graphic
Isolation	500 V system/supply
Internal bit width	4 bits
Wire connection	CAGE CLAMP®
Cross sections	0.08 mm² ... 2.5 mm² / AWG 28 ... 14
Strip lengths, 750/753 Series	8 ... 9 mm / 0.33 in
	9 ... 10 mm / 0.37 in
Width	12 mm
Weight	51 g
EMC immunity of interference	acc. to EN 61000-6-2
EMC emission of interference	acc. to EN 61000-6-4

4-Channel Digital Input Module 24 V DC

2- to 3-conductor connection; low-side switching

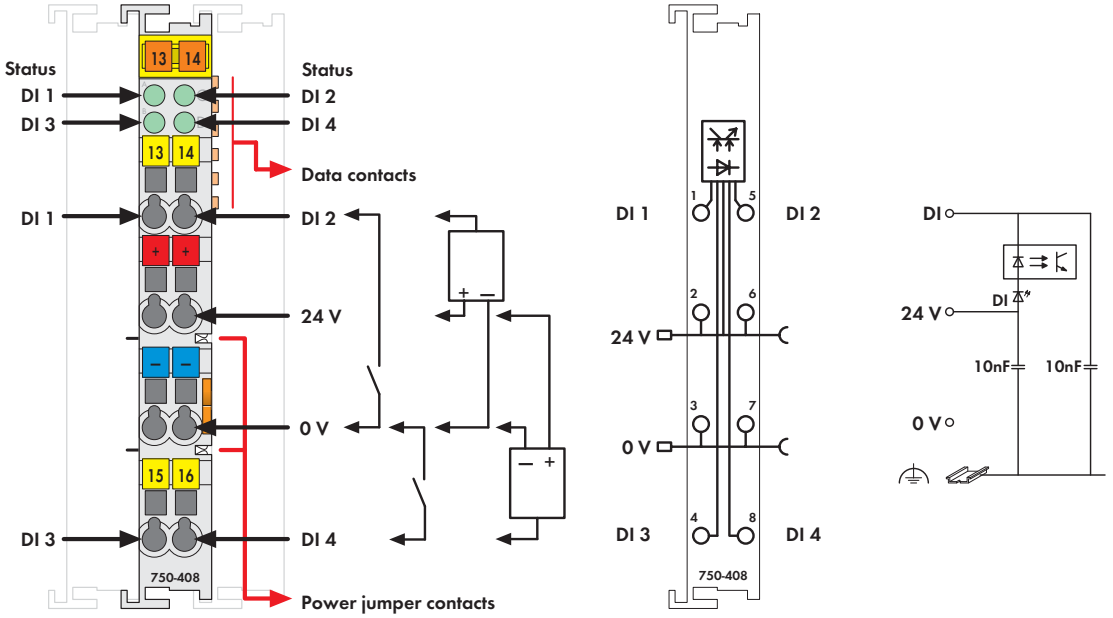

Fig. 750 Series
Delivered without miniature WSB markers

The digital input module receives control signal from the digital field devices (sensors, etc.).

Each input module has a noise-rejection filter. This filter is available with different time constants

An optocoupler provides electrical isolation between the bus and the field side.

Description	Item No.	Pack. Unit
4DI 24V DC 3.0ms, low-side switching	**750-408**	1
4DI 24V DC 0.2ms, low-side switching	**750-409**	1
4DI 24V DC 3.0ms, low-side switching /T	**750-408/025-000**	1
Extended temperature range: -20 °C ... +60 °C		
4DI 24V DC 3.0ms, low-side switching (without connector)	**753-408**	1
4DI 24V DC 0.2ms, low-side switching (without connector)	**753-409**	1

Accessories	Item No.	Pack. Unit
753 Series Connectors	**753-110**	25
Coding elements	**753-150**	100
Miniature WSB Quick marking system		
plain	**248-501**	5
with marking	see Section 11	

Approvals

Conformity marking	CE
Korea Certification	
Marine applications (versions upon request)	BV, GL, LR, NKK, PRS, RINA (75x-408)
UL 508	
ANSI/ISA 12.12.01	Class I, Div. 2, Grp. ABCD, T4
TÜV 07 ATEX 554086 X	I M2 Ex d I Mb,
	II 3 G Ex nA IIC T4 Gc,
	II 3 D Ex tc IIIC T135°C Dc
IECEx TUN 09.0001 X	Ex d I Mb,
	Ex nA IIC T4 Gc,
	Ex tc IIIC T135°C Dc

Technical Data

Number of inputs	4
Current consumption (internal)	5 mA
Voltage via power jumper contacts	24 V DC (-15 % ... +20 %)
Signal voltage (0)	(V_v - 5 V DC) ... V_v
Signal voltage (1)	-3 V DC (V_v - 15 V)
Input filter	3.0 ms (750-408 / 753-408)
	0.2 ms (750-409 / 753-409)
Input current (typ.)	7 mA
Isolation	500 V system/supply
Internal bit width	4 bits
Wire connection	CAGE CLAMP®
Cross sections	0.08 mm² ... 2.5 mm² / AWG 28 ... 14
Strip lengths, 750/753 Series	8 ... 9 mm / 0.33 in
	9 ... 10 mm / 0.37 in
Width	12 mm
Weight	48 g
EMC immunity of interference	acc. to EN 61000-6-2, marine applications
EMC emission of interference	acc. to EN 61000-6-4, marine applications

4-Channel Digital Input Module 24 V DC

High-side switching, 3-conductor connection

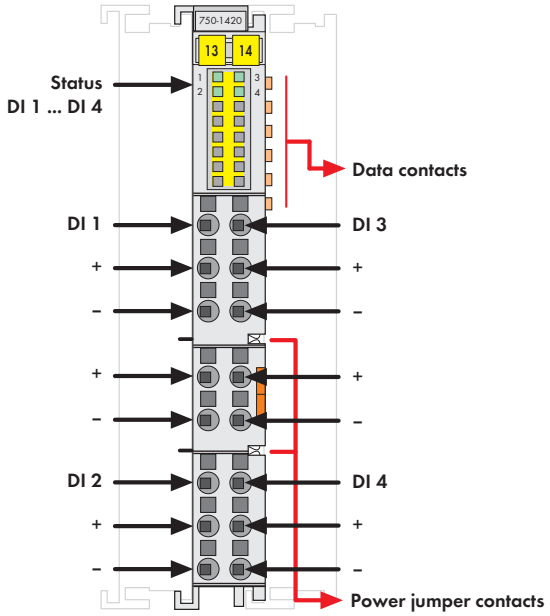

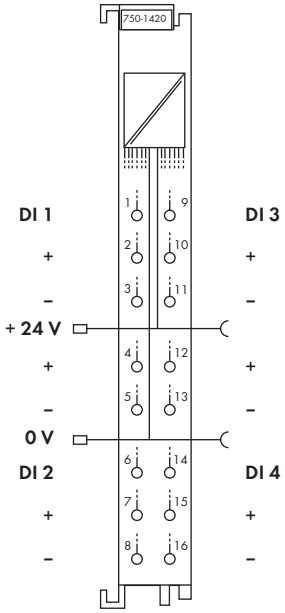

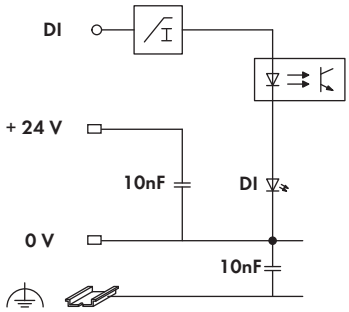

The 3-conductor digital input module provides 4 channels at a width of just 12mm (0.47in.).

It receives binary control signals from digital field devices (e.g., sensors, encoders, switches or proximity switches).

The module has Push-in CAGE CLAMP® connections enabling solid conductors to be inserted directly.
Each input channel has a noise-rejection RC filter with 3.0ms or 0.2 ms time constant.

A green LED indicates the switched status of each channel.

An optocoupler provides electrical isolation between the bus and the field side.

An operating tool with a 2.5mm blade (210-719) is required to open the Push-in CAGE CLAMP® connections.

Description	Item No.	Pack. Unit
4DI 24V DC 3.0ms, 3-conductor	**750-1420**	1
4DI 24V DC 0.2ms, 3-conductor	**750-1421**	1

Accessories		Item No.	Pack. Unit
Miniature WSB Quick marking system			
	plain	**248-501**	5
	with marking	see Section 11	
Operating tool, with partially insulated shaft, type 1, blade (2.5 x 0.4) mm		**210-719**	50

Approvals

Conformity marking	CE
Korea Certification	
Marine applications	ABS, BV, DNV, GL, KR, LR, NKK, PRS, RINA
cULus UL 508	
cULus ANSI/ISA 12.12.01	Class I, Div. 2, Grp. ABCD, T4
TÜV 07 ATEX 554086 X	I M2 Ex d I Mb, II 3 G Ex nA IIC T4 Gc, II 3 D Ex tc IIIC T135°C Dc
IECEx TUN 09.0001 X	Ex d I Mb, Ex nA IIC T4 Gc, Ex tc IIIC T135°C Dc

Technical Data

Number of inputs	4
Current consumption (internal)	4 mA
Current consumption typ. (field side)	2 mA
Voltage via power jumper contacts	24 V DC (-25 % ... +30 %)
Signal voltage (0)	-3 V ... +5 V DC (Type 1/3)
Signal voltage (1)	+11 V ... +30 V DC (Type 3)
Input filter	3.0 ms (750-1420)
	0.2 ms (750-1421)
Input current (typ.)	+1.6 mA (at -3 V ... +5 V DC)
	+4.3 mA ... +4.6 mA (at +11 V ... +32 V)
Isolation	500 V system/field
Wire connection	Push-in CAGE CLAMP®
Cross sections	solid:
	0.08 mm² ... 1.5 mm² / AWG 28 ... 16
	fine-stranded:
	0.25 mm² ... 1.5 mm² / AWG 22 ... 16
Strip lengths	8 ... 9 mm / 0.33 in
Width	12 mm
Weight	50 g
EMC immunity of interference	acc. to EN 61000-6-2, marine applications
EMC emission of interference	acc. to EN 61000-6-3, marine applications

4-Channel Digital Input Module 24 V DC

Low-side switching, 3-conductor connection

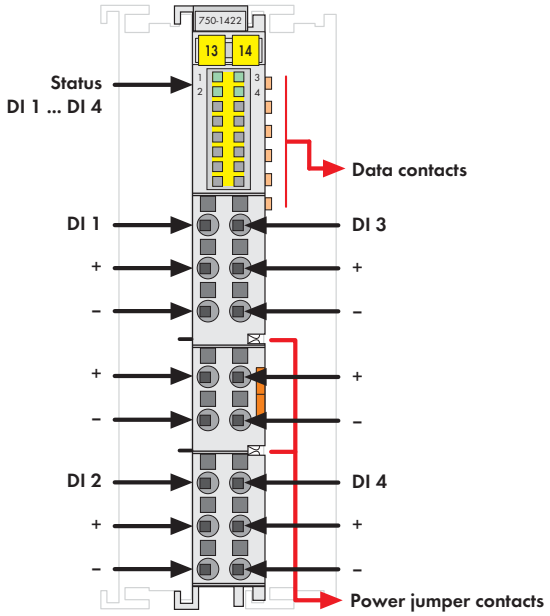

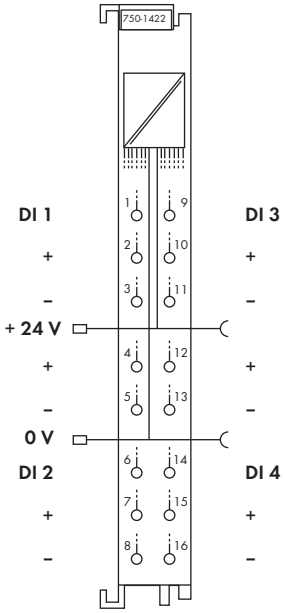

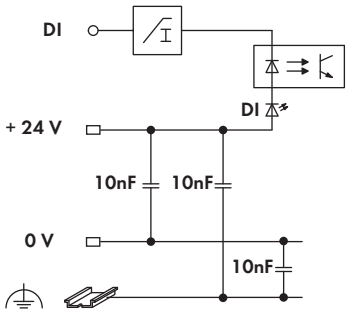

The 3-conductor digital input module provides 4 channels at a width of just 12mm (0.47in.).

It receives binary control signals from digital field devices (e.g., sensors, encoders, switches or proximity switches).

The module has Push-in CAGE CLAMP® connections enabling solid conductors to be inserted directly.
Each input channel has a noise-rejection RC filter with 3.0ms or 0.2 ms time constant.

A green LED indicates the switched status of each channel.

An optocoupler provides electrical isolation between the bus and the field side.

An operating tool with a 2.5mm blade (210-719) is required to open the Push-in CAGE CLAMP® connections.

Description	Item No.	Pack. Unit
4DI 24V DC 3.0ms, low-side switching, 3-conductor	**750-1422**	1
4DI 24V DC 0.2ms, low-side switching, 3-conductor	**750-1423**	1

Accessories		Item No.	Pack. Unit
Miniature WSB Quick marking system			
	plain	**248-501**	5
	with marking	see Section 11	
Operating tool, with partially insulated shaft, type 1, blade (2.5 x 0.4) mm		**210-719**	50

Approvals

Conformity marking	CE
Korea Certification	
Marine applications	ABS, BV, DNV, GL, KR, LR, NKK, PRS, RINA
UL 508	
ANSI/ISA 12.12.01	Class I, Div. 2, Grp. ABCD, T4
TÜV 07 ATEX 554086 X	I M2 Ex d I Mb, II 3 G Ex nA IIC T4 Gc, II 3 D Ex tc IIIC T135°C Dc
IECEx TUN 09.0001 X	Ex d I Mb, Ex nA IIC T4 Gc, Ex tc IIIC T135°C Dc

Technical Data

Number of inputs	4
Current consumption (internal)	7 mA
Voltage via power jumper contacts	24 V DC (-25 % ... +30 %)
Signal voltage (0)	(V_V - 5 V DC) ... V_V
Signal voltage (1)	-3 V DC ... (V_V - 15 V)
Input filter	3.0 ms (750-1422)
	0.2 ms (750-1423)
Input current (typ.)	-0.6 mA (at -3 V ... +5 V DC)
	-2.3 mA ... -2.7 mA (at 15 V ... +32 V DC)
Isolation	500 V system/field
Wire connection	Push-in CAGE CLAMP®
Cross sections	solid:
	0.08 mm² ... 1.5 mm² / AWG 28 ... 16
	fine-stranded:
	0.25 mm² ... 1.5 mm² / AWG 22 ... 16
Strip lengths	8 ... 9 mm / 0.33 in
Width	12 mm
Weight	44.4 g
EMC immunity of interference	acc. to EN 61000-6-2, marine applications
EMC emission of interference	acc. to EN 61000-6-3, marine applications

8-Channel Digital Input Module 24 V DC

1-conductor connection; high-side switching

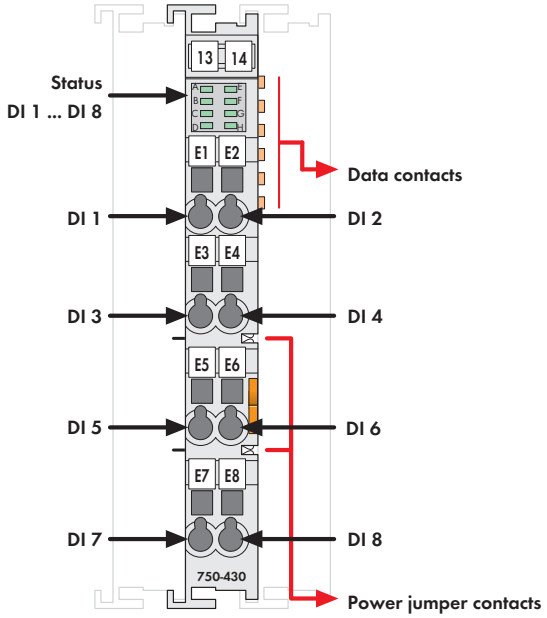

Fig. 750 Series
Delivered without miniature WSB markers

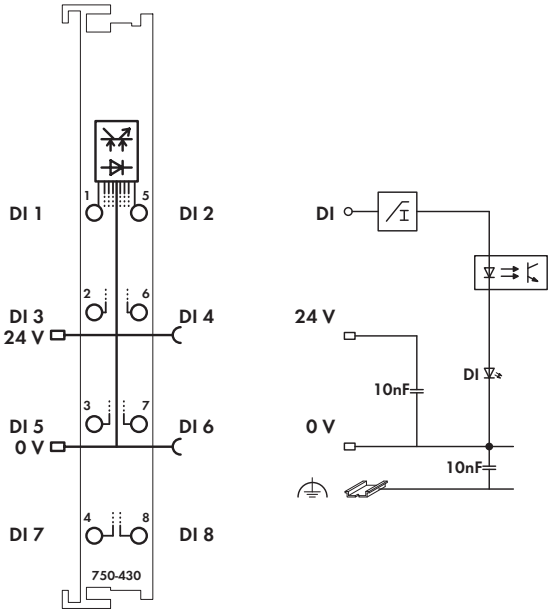

NOTE: Connection point marking (i.e., 1 ... 8) does not refer to channel assignment

The digital input module provides 8 channels at a width of just 12mm (0.47in.). It receives control signals from the digital field devices (sensors, etc.).

Each input module has a noise-rejection filter. This filter is available with different time constants.

Field and system levels are electrically isolated.

Description	Item No.	Pack. Unit
8DI 24V DC, 3.0ms	**750-430**	1
8DI 24V DC, 0.2ms	**750-431**	1
8DI 24V DC, 3.0ms/T	**750-430/025-000**	1
Extended temperature range: -20 °C ... +60 °C		
8DI 24V DC, 3.0ms (without connector)	**753-430**	1
8DI 24V DC, 0.2ms (without connector)	**753-431**	1

Accessories		Item No.	Pack. Unit
	753 Series Connectors	**753-110**	25
	Coding elements	**753-150**	100
	Miniature WSB Quick marking system		
	plain	**248-501**	5
	with marking	see Section 11	

Approvals

Conformity marking	CE
Korea Certification	
Marine applications (versions upon request)	ABS, BV, DNV, GL, KR, LR, NKK, PRS, RINA
cULus UL 508	
cULus ANSI/ISA 12.12.01	Class I, Div. 2, Grp. ABCD, T4
TÜV 12.1297 X (Brazil)	Ex nA IIC T4 Gc (750-43x)
TÜV 07 ATEX 554086 X	I M2 Ex d I Mb, II 3 G Ex nA IIC T4 Gc, II 3 D Ex tc IIIC T135°C Dc
IECEx TUN 09.0001 X	Ex d I Mb, Ex nA IIC T4 Gc, Ex tc IIIC T135°C Dc

Technical Data

Number of inputs	8
Current consumption (internal)	17 mA
Voltage via power jumper contacts	24 V DC (-25 % ... +30 %)
Signal voltage (0)	-3 V ... +5 V DC
Signal voltage (1)	15 V ... 30 V DC
Input filter	3.0 ms (750-430 / 753-430)
	0.2 ms (750-431 / 753-431)
Input current (typ.)	2.8 mA
Isolation	500 V system/supply
Internal bit width	8 bits
Wire connection	CAGE CLAMP®
Cross sections	0.08 mm² ... 2.5 mm² / AWG 28 ... 14
Strip lengths, 750/753 Series	8 ... 9 mm / 0.33 in
	9 ... 10 mm / 0.37 in
Width	12 mm
Weight	48.5 g
EMC immunity of interference	acc. to EN 61000-6-2, marine applications
EMC emission of interference	acc. to EN 61000-6-4, marine applications

8-Channel Digital Input Module 24 V DC

1-conductor connection; low-side switching

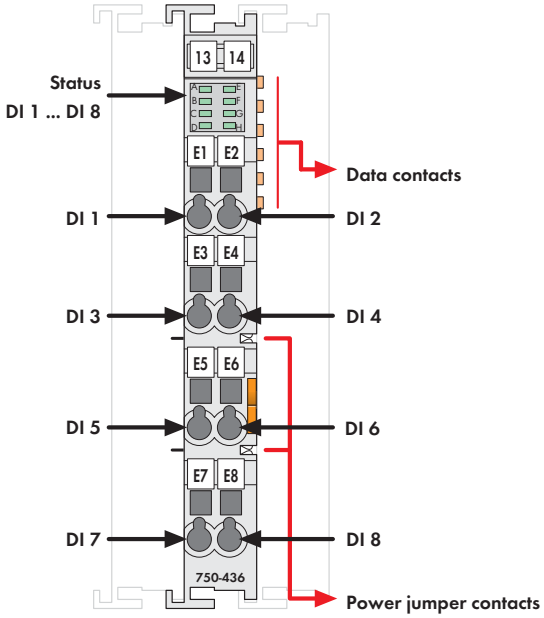

Fig. 750 Series
Delivered without miniature WSB markers

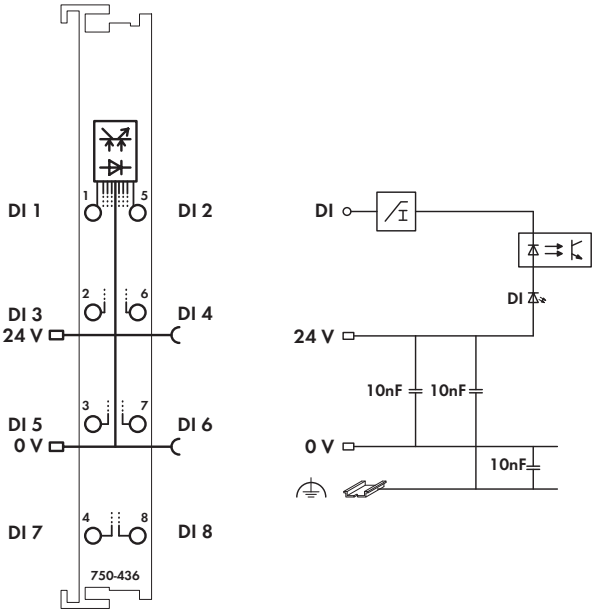

NOTE: Connection point marking (i.e., 1 ... 8) does not refer to channel assignment

The digital input module provides 8 channels at a width of just 12mm (0.47in.). It receives control signals from the digital field devices (sensors, etc.).

Each input module has a noise-rejection filter. This filter is available with different time constants.

Field and system levels are electrically isolated.

Description	Item No.	Pack. Unit
8DI 24V DC 3.0ms	**750-436**	1
8DI 24V DC 0.2ms	**750-437**	1
8DI 24V DC 3.0ms (without connector)	**753-436**	1
8DI 24V DC 0.2ms (without connector)	**753-437**	1

Accessories		Item No.	Pack. Unit
	753 Series Connectors	**753-110**	25
	Coding elements	**753-150**	100
	Miniature WSB Quick marking system		
	plain	**248-501**	5
	with marking	see Section 11	

Approvals

Conformity marking	CE
Korea Certification	
Marine applications	ABS, BV, DNV, GL, KR, LR, NKK, PRS, RINA
UL 508	
ANSI/ISA 12.12.01	Class I, Div. 2, Grp. ABCD, T4
TÜV 07 ATEX 554086 X	I M2 Ex d I Mb, II 3 G Ex nA IIC T4 Gc, II 3 D Ex tc IIIC T135°C Dc
IECEx TUN 09.0001 X	Ex d I Mb, Ex nA IIC T4 Gc, Ex tc IIIC T135°C Dc

Technical Data

Number of inputs	8
Max. current consumption (internal)	13 mA
Voltage via power jumper contacts	24 V DC (-25 % ... +30 %)
Signal voltage (0)	15 V ... 30 V DC
Signal voltage (1)	-3 V ... +5 V DC
Input filter	3.0 ms (750-436 / 753-436)
	0.2 ms (750-437 / 753-437)
Input current (typ.)	2.8 mA
Isolation	500 V system/supply
Internal bit width	8 bits in
Wire connection	CAGE CLAMP®
Cross sections	0.08 mm² ... 2.5 mm² / AWG 28 ... 14
Strip lengths, 750/753 Series	8 ... 9 mm / 0.33 in
	9 ... 10 mm / 0.37 in
Width	12 mm
Weight	48 g
EMC immunity of interference	acc. to EN 61000-6-2, marine applications
EMC emission of interference	acc. to EN 61000-6-3, marine applications

8-Channel Digital Input/Output Module 24 V DC

Ribbon cable, high-side switching

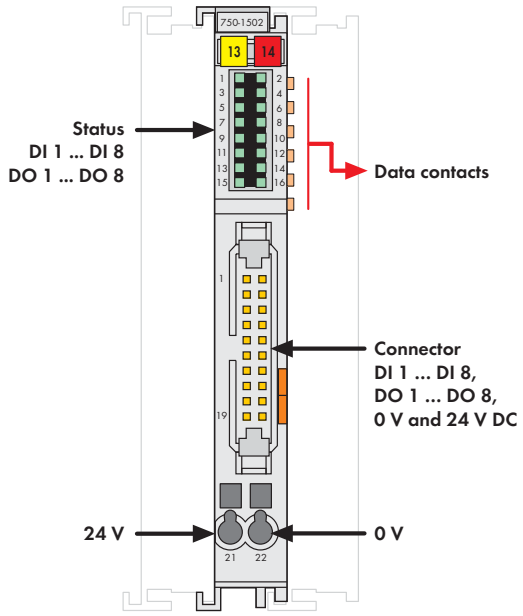

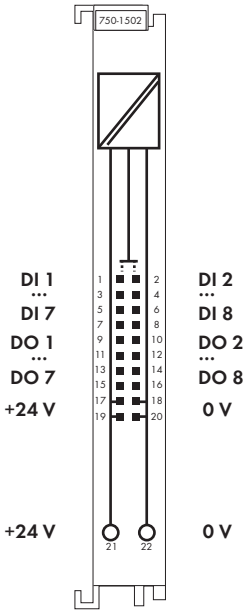

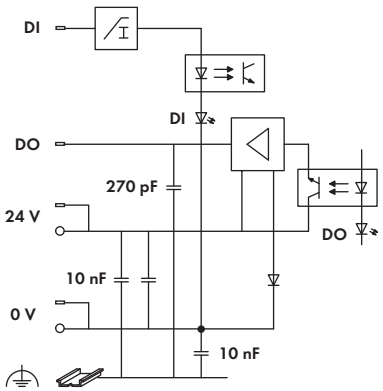

Delivered without miniature WSB markers

The digital input/output module provides 8 inputs and 8 outputs at a width of just 12mm (0.47in.).

It receives binary control signals from digital field devices and transmits them to the connected actuators (e.g., magnetic valves, contactors, transmitters, relays or other electrical loads).

The module connects electronic modules via a 20-pole flat cable.

The 24V power is fed to the electronic modules via two CAGE CLAMP® terminals.

A green LED indicates the switched status of each channel.

An optocoupler provides electrical isolation between the bus and the field side.

Description	Item No.	Pack. Unit
8DI 8DO 24V DC 0.5A, ribbon cable	**750-1502**	1
Interference-free for use in safety functions (see manual)		

Accessories		Item No.	Pack. Unit
Miniature WSB Quick marking system			
	plain	**248-501**	5
	with marking	see Section 11	
Cable and interface modules		see Section 11	

Approvals

Conformity marking	CE
Korea Certification	
Marine applications	ABS, BV, DNV, GL, KR, LR, NKK, PRS, RINA
cULus UL 508	
cULus ANSI/ISA 12.12.01	Class I, Div. 2, Grp. ABCD, T4
TÜV 07 ATEX 554086 X	I M2 Ex d I Mb, II 3 G Ex nA IIC T4 Gc, II 3 D Ex tc IIIC T135°C Dc
IECEx TUN 09.0001 X	Ex d I Mb, Ex nA IIC T4 Gc, Ex tc IIIC T135°C Dc

Technical Data

Digital inputs:	
Number of inputs	8
Signal voltage (0)	-3 V ... +5 V DC
Signal voltage (1)	15 V ... 30 V DC
Input filter	3.0 ms
Input current (typ.)	+0.6 mA (at -3 V ... +5 V DC)
	+2.2 mA ... +2.5 mA (at 15 V ... +32 V DC)
Digital outputs:	
No. of outputs	8
Type of load	resistive, inductive, lamps
Max. switching frequency	1kHz
Output current (max.)	0.5 A, short-circuit protected
Current consumption typ. (field side)	16mA
General Specifications	
Voltage supply	24 V DC (-25 % ... +30 %)
Current consumption (internal)	30 mA
Isolation	500 V system/field
Wire connection	20-pin male connector / CAGE CLAMP®
Cross sections CAGE CLAMP®	0.08 mm² ... 2.5 mm² / AWG 28 ... 16
Strip lengths	8 ... 9 mm / 0.33 in
Dimensions (mm) W x H x L	12 x 73 x 100
	Height from upper-edge of DIN 35 rail
Weight	44 g
EMC immunity of interference	acc. to EN 61000-6-2, marine applications
EMC emission of interference	acc. to EN 61000-6-3, marine applications

8-Channel Digital Input/Output Module 24 V DC

High-side switching

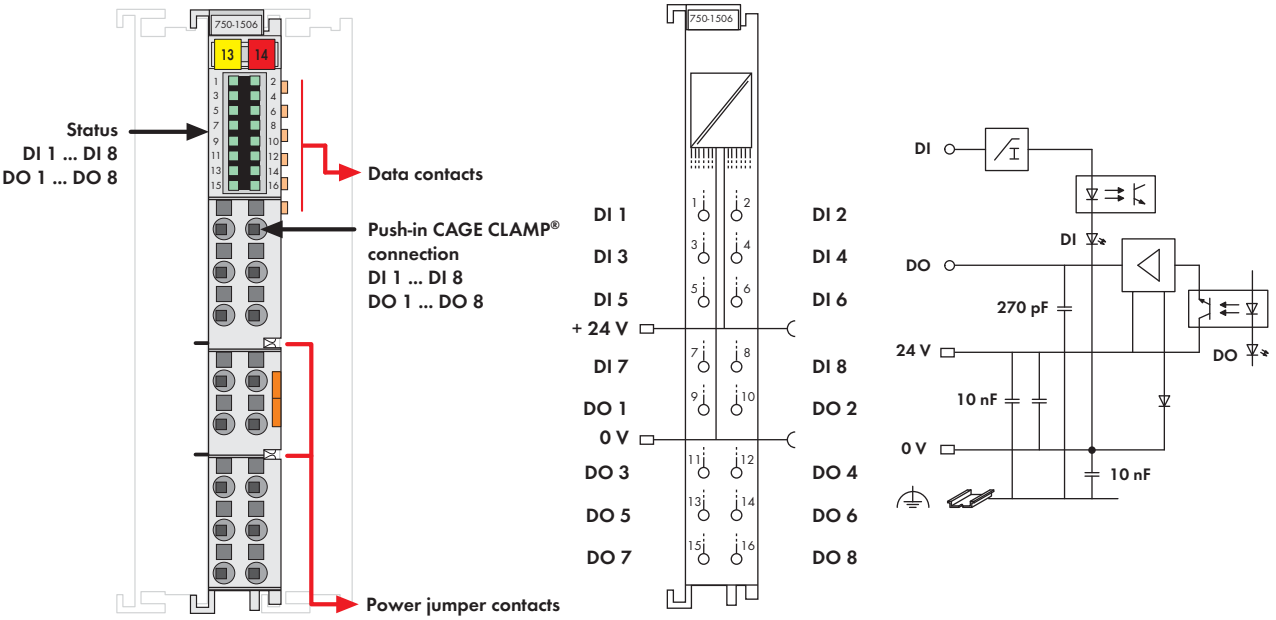

Delivered without miniature WSB markers

The digital input/output module provides 8 inputs and 8 outputs at a width of just 12mm (0.47in.).

It receives binary control signals from digital field devices and transmits them to the connected actuators (e.g., magnetic valves, contactors, transmitters, relays or other electrical loads).

The module has Push-in CAGE CLAMP® connections enabling solid conductors to be inserted directly.

A green LED indicates the switched status of each channel.

An optocoupler provides electrical isolation between the bus and the field side.

Description	Item No.	Pack. Unit
8DI 8DO 24V DC 0.5A	**750-1506**	1
Interference-free for use in safety functions (see manual)		

Accessories		Item No.	Pack. Unit
Miniature WSB Quick marking system			
	plain	**248-501**	5
	with marking	see Section 11	
Operating tool, with partially insulated shaft, type 1, blade (2.5 x 0.4) mm		**210-719**	50

Approvals

Conformity marking	CE
Korea Certification	
Marine applications	ABS, BV, DNV, GL, KR, LR, NKK, PRS, RINA
UL 508	
ANSI/ISA 12.12.01	Class I, Div. 2, Grp. ABCD, T4
TÜV 07 ATEX 554086 X	I M2 Ex d I Mb, II 3 G Ex nA IIC T4 Gc, II 3 D Ex tc IIIC T135°C Dc
IECEx TUN 09.0001 X	Ex d I Mb, Ex nA IIC T4 Gc, Ex tc IIIC T135°C Dc

Technical Data

Digital inputs:	
Number of inputs	8
Signal voltage (0)	-3 V ... +5 V DC
Signal voltage (1)	15 V ... 30 V DC
Input filter	3.0 ms
Input current (typ.)	+0.6 mA (at -3 V ... +5 V DC)
	+2.2 mA ... +2.5 mA (at 15 V ... +32 V DC)
Digital outputs:	
No. of outputs	8
Type of load	resistive, inductive, lamps
Max. switching frequency	1kHz
Output current (max.)	0.5 A, short-circuit protected
Current consumption typ. (field side)	16mA
General Specifications	
Current consumption (internal)	30 mA
Isolation	500 V system/field
Wire connection	Push-in CAGE CLAMP®
Cross sections	solid:
	0.08 mm² ... 1.5 mm² / AWG 28 ... 16
	fine-stranded:
	0.25 mm² ... 1.5 mm² / AWG 22 ... 16
Strip lengths	8 ... 9 mm / 0.33 in
Width	12 mm
Weight	60 g
EMC immunity of interference	acc. to EN 61000-6-2, marine applications
EMC emission of interference	acc. to EN 61000-6-3, marine applications

8-Channel Digital Input Module 24 V DC

High-side switching, 2-conductor connection

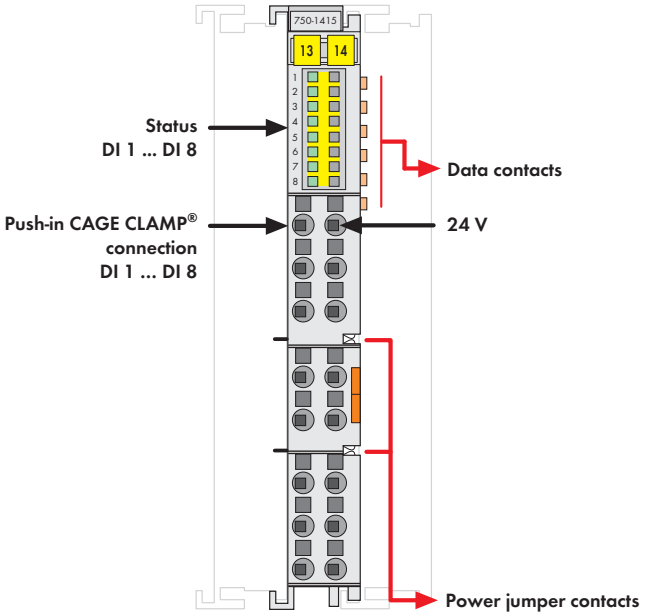

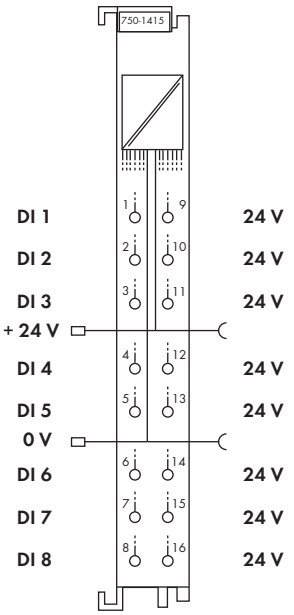

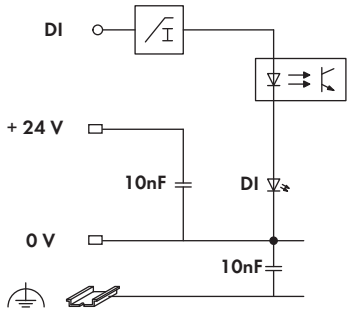

The 2-conductor digital input module provides 8 channels at a width of just 12mm (0.47in).

It receives binary control signals from digital field devices (e.g., sensors, encoders, switches or proximity switches).

The module has Push-in CAGE CLAMP® connections enabling solid conductors to be inserted directly.
Each input channel has a noise-rejection RC filter with 3.0ms or 0.2 ms time constant.

A green LED indicates the switched status of each channel.

An optocoupler provides electrical isolation between the bus and the field side.

An operating tool with a 2.5mm blade (210-719) is required to open the Push-in CAGE CLAMP® connections.

Description	Item No.	Pack. Unit
8DI 24V DC 3.0ms, 2-conductor	**750-1415**	1
8DI 24V DC 0.2ms, 2-conductor	**750-1416**	1

Accessories		Item No.	Pack. Unit
Miniature WSB Quick marking system			
	plain	**248-501**	5
	with marking	see Section 11	
Operating tool, with partially insulated shaft, type 1, blade (2.5 x 0.4) mm		**210-719**	50

Approvals

Conformity marking	CE
Korea Certification	
Marine applications	ABS, BV, DNV, GL, KR, LR, NKK, PRS, RINA
cULus UL 508	
cULus ANSI/ISA 12.12.01	Class I, Div. 2, Grp. ABCD, T4
TÜV 07 ATEX 554086 X	I M2 Ex d I Mb, II 3 G Ex nA IIC T4 Gc, II 3 D Ex tc IIIC T135°C Dc
IECEx TUN 09.0001 X	Ex d I Mb, Ex nA IIC T4 Gc, Ex tc IIIC T135°C Dc

Technical Data

Number of inputs	8
Current consumption (internal)	6 mA
Current consumption typ. (field side)	2 mA
Voltage via power jumper contacts	24 V DC (-25 % ... +30 %)
Signal voltage (0)	-3 V ... +5 V DC (Type 1/3)
Signal voltage (1)	+11 V ... +30 V DC (Type 3)
Input filter	3.0 ms (750-1415) 0.2 ms (750-1416)
Input current (typ.)	+1.6 mA (at -3 V ... +5 V DC) +4.3 mA ... +4.6 mA (at +11 V ... +32 V)
Isolation	500 V system/field
Wire connection	Push-in CAGE CLAMP®
Cross sections	solid: 0.08 mm² ... 1.5 mm² / AWG 28 ... 16 fine-stranded: 0.25 mm² ... 1.5 mm² / AWG 22 ... 16
Strip lengths	8 ... 9 mm / 0.33 in
Width	12 mm
Weight	45 g
EMC immunity of interference	acc. to EN 61000-6-2, marine applications
EMC emission of interference	acc. to EN 61000-6-3, marine applications

8-Channel Digital Input Module 24 V DC

Low-side switching, 2-conductor connection

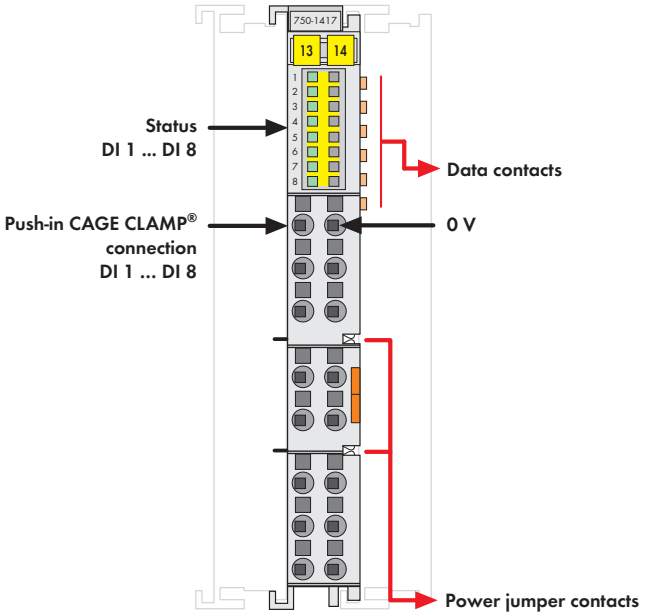

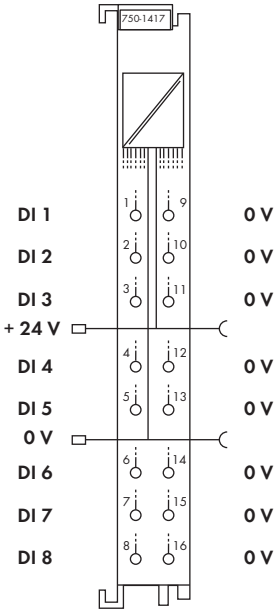

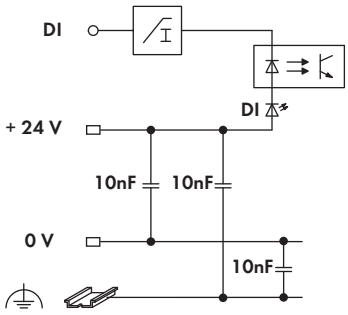

The 2-conductor digital input module provides 8 channels at a width of just 12mm (0.47in).

It receives binary control signals from digital field devices (e.g., sensors, encoders, switches or proximity switches).

The module has Push-in CAGE CLAMP® connections enabling solid conductors to be inserted directly.
Each input channel has a noise-rejection RC filter with 3.0ms or 0.2 ms time constant.

A green LED indicates the switched status of each channel.

An optocoupler provides electrical isolation between the bus and the field side.

An operating tool with a 2.5mm blade (210-719) is required to open the Push-in CAGE CLAMP® connections.

Description	Item No.	Pack. Unit
8DI 24V DC 3.0ms, low-side switching, 2-conductor	**750-1417**	1
8DI 24V DC 0.2ms, low-side switching, 2-conductor	**750-1418**	1

Accessories		Item No.	Pack. Unit
Miniature WSB Quick marking system			
	plain	**248-501**	5
	with marking	see Section 11	
Operating tool, with partially insulated shaft, type 1, blade (2.5 x 0.4) mm		**210-719**	50

Approvals

Conformity marking	CE
Korea Certification	
Marine applications	ABS, BV, DNV, GL, KR, LR, NKK, PRS, RINA
UL 508	
ANSI/ISA 12.12.01	Class I, Div. 2, Grp. ABCD, T4
TÜV 07 ATEX 554086 X	I M2 Ex d I Mb, II 3 G Ex nA IIC T4 Gc, II 3 D Ex tc IIIC T135°C Dc
IECEx TUN 09.0001 X	Ex d I Mb, Ex nA IIC T4 Gc, Ex tc IIIC T135°C Dc

Technical Data

Number of inputs	8
Current consumption (internal)	12 mA
Voltage via power jumper contacts	24 V DC (-25 % ... +30 %)
Signal voltage (0)	(V_V - 5 V DC) ... V_V
Signal voltage (1)	-3 V DC ... (V_V - 15 V)
Input filter	3.0 ms (750-1417)
	0.2 ms (750-1418)
Input current (typ.)	-0.6 mA (at -3 V ... +5 V DC)
	-2.3 mA ... -2.7 mA (at 15 V ... +32 V DC)
Isolation	500 V system/field
Wire connection	Push-in CAGE CLAMP®
Cross sections	solid:
	0.08 mm² ... 1.5 mm² / AWG 28 ... 16
	fine-stranded:
	0.25 mm² ... 1.5 mm² / AWG 22 ... 16
Strip lengths	8 ... 9 mm / 0.33 in
Width	12 mm
Weight	45.3 g
EMC immunity of interference	acc. to EN 61000-6-2, marine applications
EMC emission of interference	acc. to EN 61000-6-3, marine applications

16-Channel Digital Input Module 24 V DC

Ribbon cable, high-side switching

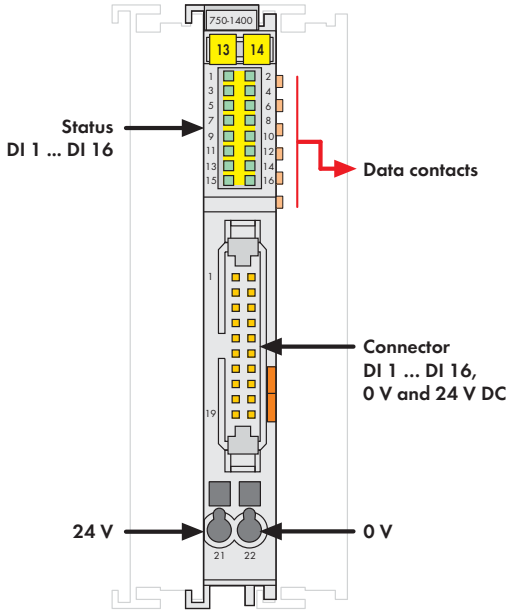

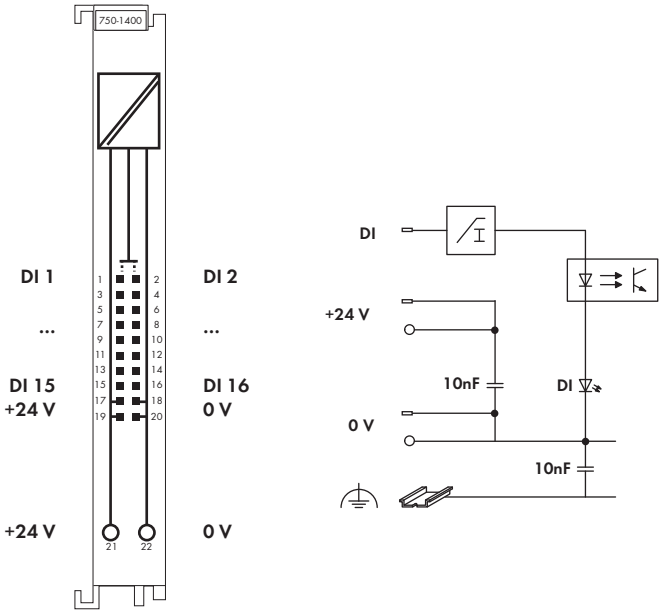

Delivered without miniature WSB markers

The digital input module provides 16 channels at a width of just 12mm (0.47in).

It receives binary control signals from digital field devices (e.g., sensors, encoders, switches or proximity switches).

The module connects electronic modules via a 20-pole flat cable.
The 24V power is fed to the electronic modules via two CAGE CLAMP® terminals.
Each input channel has a noise-rejection RC filter with 3.0ms time constant.

A green LED indicates the switched status of each channel.

An optocoupler provides electrical isolation between the bus and the field side.

Description	Item No.	Pack. Unit
16DI 24V DC 3.0ms, ribbon cable	**750-1400**	1

Accessories		Item No.	Pack. Unit
Miniature WSB Quick marking system			
	plain	**248-501**	5
	with marking	see Section 11	
Cable and interface modules		see Section 11	

Approvals

Conformity marking	CE
Korea Certification	
Marine applications	ABS, BV, DNV, GL, KR, LR, NKK, PRS, RINA
UL 508	
ANSI/ISA 12.12.01	Class I, Div. 2, Grp. ABCD, T4
TÜV 07 ATEX 554086 X	I M2 Ex d I Mb, II 3 G Ex nA IIC T4 Gc, II 3 D Ex tc IIIC T135°C Dc
IECEx TUN 09.0001 X	Ex d I Mb, Ex nA IIC T4 Gc, Ex tc IIIC T135°C Dc

Technical Data

Number of inputs	16
Current consumption (internal)	25 mA
Voltage supply	24 V DC (-25 % ... +30 %)
Signal voltage (0)	-3 V ... +5 V DC
Signal voltage (1)	15 V ... 30 V DC
Input filter	3.0 ms
Input current (typ.)	+0.6 mA (at -3 V ... +5 V DC) +2.2 mA ... +2.5 mA (at 15 V ... +32 V DC)
Isolation	500 V system/field
Wire connection	20-pin male connector / CAGE CLAMP®
Cross sections CAGE CLAMP®	0.08 mm² ... 2.5 mm² / AWG 28 ... 16
Strip lengths	8 ... 9 mm / 0.33 in
Dimensions (mm) W x H x L	12 x 73 x 100 Height from upper-edge of DIN 35 rail
Weight	42.6 g
EMC immunity of interference	acc. to EN 61000-6-2, marine applications
EMC emission of interference	acc. to EN 61000-6-3, marine applications

16-Channel Digital Input Module 24 V DC

High-side switching

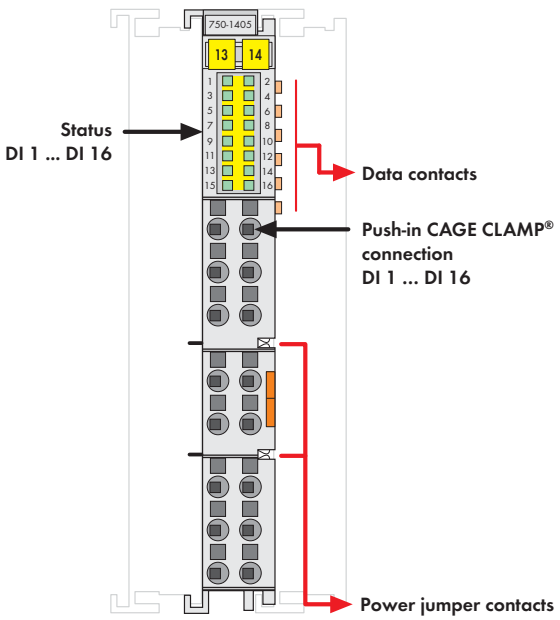

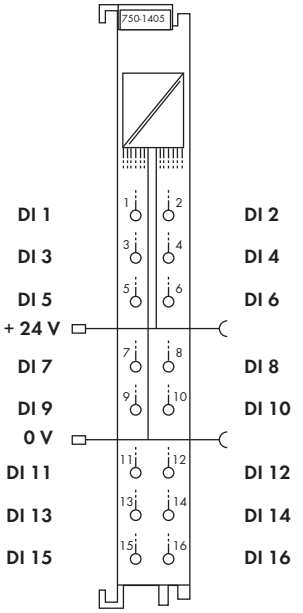

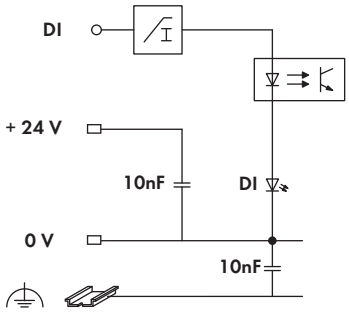

Delivered without miniature WSB markers

The digital input module provides 16 channels at a width of just 12mm (0.47in).

It receives binary control signals from digital field devices (e.g., sensors, encoders, switches or proximity switches).

The module has Push-in CAGE CLAMP® connections enabling solid conductors to be inserted directly.
Each input channel has a noise-rejection RC filter with 3.0ms or 0.2 ms time constant.

A green LED indicates the switched status of each channel.

An optocoupler provides electrical isolation between the bus and the field side.

Description	Item No.	Pack. Unit
16DI 24V DC 3.0ms	**750-1405**	1
16DI 24V DC 0.2ms	**750-1406**	1

Accessories		Item No.	Pack. Unit
Miniature WSB Quick marking system			
	plain	**248-501**	5
	with marking	see Section 11	
Operating tool, with partially insulated shaft, type 1, blade (2.5 x 0.4) mm		**210-719**	50

Approvals

Conformity marking	CE
Korea Certification	[1]
Marine applications	ABS[1], BV, DNV[1], GL, KR, LR[1], NKK, PRS, RINA
UL 508	
ANSI/ISA 12.12.01	Class I, Div. 2, Grp. ABCD, T4
TÜV 07 ATEX 554086 X	I M2 Ex d I Mb, II 3 G Ex nA IIC T4 Gc, II 3 D Ex tc IIIC T135°C Dc
IECEx TUN 09.0001 X	Ex d I Mb, Ex nA IIC T4 Gc, Ex tc IIIC T135°C Dc

[1] Does not apply to 750-1406

Technical Data

Number of inputs	16
Current consumption (internal)	25 mA
Voltage via power jumper contacts	24 V DC (-25 % ... +30 %)
Signal voltage (0)	-3 V ... +5 V DC
Signal voltage (1)	15 V ... 30 V DC
Input filter	3.0 ms (750-1405)
	0.2 ms (750-1406)
Input current (typ.)	+0.6 mA (at -3 V ... +5 V DC)
	+2.1 mA ... +2.4 mA (at 15 V ... +32 V DC)
Isolation	500 V system/field
Wire connection	Push-in CAGE CLAMP®
Cross sections	solid:
	0.08 mm² ... 1.5 mm² / AWG 28 ... 16
	fine-stranded:
	0.25 mm² ... 1.5 mm² / AWG 22 ... 16
Strip lengths	8 ... 9 mm / 0.33 in
Width	12 mm
Weight	60 g
EMC immunity of interference	acc. to EN 61000-6-2, marine applications
EMC emission of interference	acc. to EN 61000-6-3, marine applications

16-Channel Digital Input Module 24 V DC

Ribbon cable, low-side switching

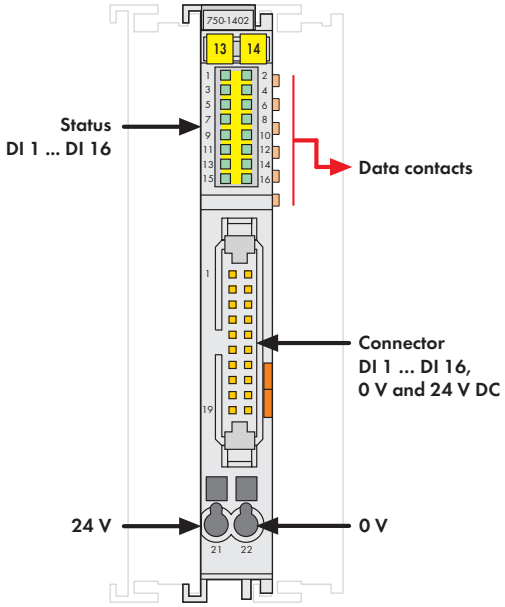

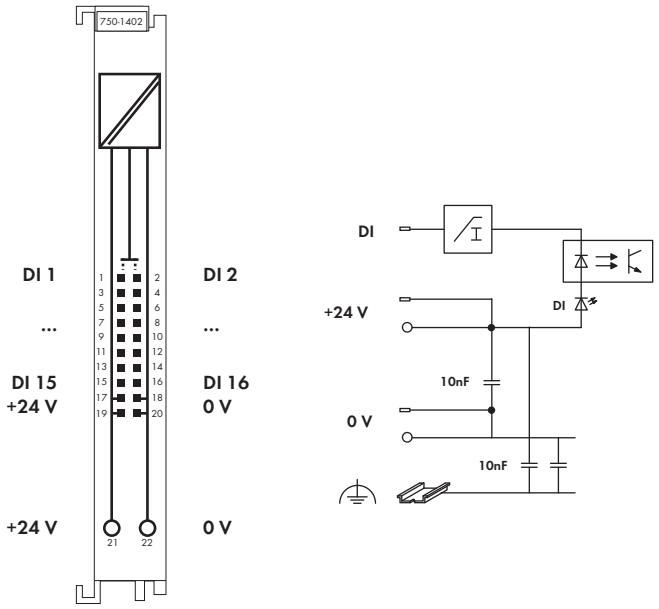

Delivered without miniature WSB markers

The digital input module provides 16 channels at a width of just 12mm (0.47in).

It receives binary control signals from digital field devices (e.g., sensors, encoders, switches or proximity switches).

The module connects electronic modules via a 20-pole flat cable.
The 24V power is fed to the electronic modules via two CAGE CLAMP® terminals.

Each input channel has a noise-rejection RC filter with 3.0ms time constant.

A green LED indicates the switched status of each channel.

An optocoupler provides electrical isolation between the bus and the field side.

Description	Item No.	Pack. Unit
16DI 24V DC 3.0ms, ribbon cable, low-side switching	**750-1402**	1

Accessories		Item No.	Pack. Unit
Miniature WSB Quick marking system			
	plain	**248-501**	5
	with marking	see Section 11	
Cable and interface modules		see Section 11	

Approvals

Conformity marking	CE
Korea Certification	
Marine applications	ABS, BV, DNV, GL, KR, LR, NKK, PRS, RINA
cULus UL 508	
cULus ANSI/ISA 12.12.01	Class I, Div. 2, Grp. ABCD, T4
TÜV 07 ATEX 554086 X	I M2 Ex d I Mb, II 3 G Ex nA IIC T4 Gc, II 3 D Ex tc IIIC T135°C Dc
IECEx TUN 09.0001 X	Ex d I Mb, Ex nA IIC T4 Gc, Ex tc IIIC T135°C Dc

Technical Data

Number of inputs	16
Current consumption (internal)	25 mA
Voltage supply	24 V DC (-25 % ... +30 %)
Signal voltage (0)	(V_V - 5 V DC) ... V_V
Signal voltage (1)	-3 V DC ... (V_V - 15 V)
Input filter	3.0 ms
Input current (typ.)	+0.6 mA (at -3 V ... +5 V DC)
	+2.2 mA ... +2.5 mA (at 15 V ... +32 V DC)
Isolation	500 V system/field
Wire connection	20-pin male connector / CAGE CLAMP®
Cross sections CAGE CLAMP®	0.08 mm² ... 2.5 mm² / AWG 28 ... 16
Strip lengths	8 ... 9 mm / 0.33 in
Dimensions (mm) W x H x L	12 x 73 x 100
	Height from upper-edge of DIN 35 rail
Weight	41.5 g
EMC immunity of interference	acc. to EN 61000-6-2, marine applications
EMC emission of interference	acc. to EN 61000-6-3, marine applications

16-Channel Digital Input Module 24 V DC

Low-side switching

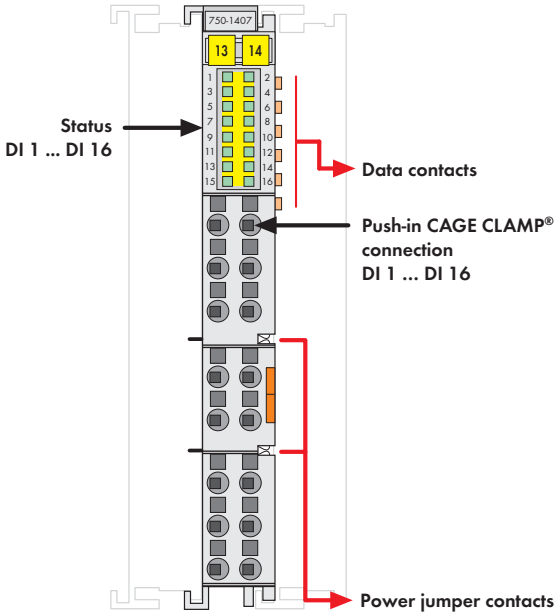

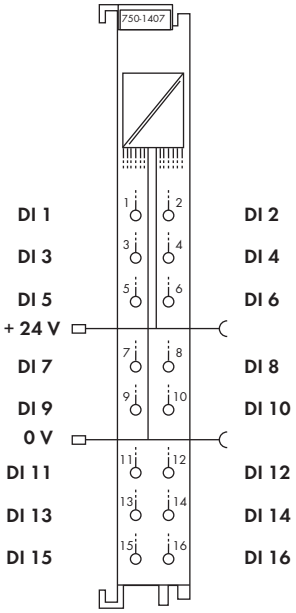

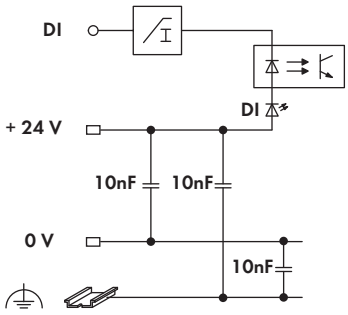

Delivered without miniature WSB markers

The digital input module provides 16 channels at a width of just 12mm (0.47in).

It receives binary control signals from digital field devices (e.g., sensors, encoders, switches or proximity switches).

The module has Push-in CAGE CLAMP® connections enabling solid conductors to be inserted directly.

Each input channel has a noise-rejection RC filter with 3.0ms time constant.

A green LED indicates the switched status of each channel.

An optocoupler provides electrical isolation between the bus and the field side.

Description	Item No.	Pack. Unit
16DI 24V DC 3.0ms, low-side switching	**750-1407**	1

Accessories		Item No.	Pack. Unit
Miniature WSB Quick marking system			
	plain	**248-501**	5
	with marking	see Section 11	
Operating tool, with partially insulated shaft, type 1, blade (2.5 x 0.4) mm		**210-719**	50

Approvals

Conformity marking	CE
Korea Certification	KC
Marine applications	ABS, BV, DNV, GL, KR, LR, NKK, PRS, RINA
cULus UL 508	
cULus ANSI/ISA 12.12.01	Class I, Div. 2, Grp. ABCD, T4
TÜV 07 ATEX 554086 X	I M2 Ex d I Mb, II 3 G Ex nA IIC T4 Gc, II 3 D Ex tc IIIC T135°C Dc
IECEx TUN 09.0001 X	Ex d I Mb, Ex nA IIC T4 Gc, Ex tc IIIC T135°C Dc

Technical Data

Number of inputs	16
Current consumption (internal)	25 mA
Voltage via power jumper contacts	24 V DC (-25 % ... +30 %)
Signal voltage (0)	(V_V - 5 V DC) ... V_V
Signal voltage (1)	-3 V DC ... (V_V - 15 V)
Input filter	3.0 ms
Input current (typ.)	-0.6 mA (at -3 V ... +5 V DC)
	-2.1 mA ... -2.4 mA (at 15 V ... +32 V DC)
Isolation	500 V system/field
Wire connection	Push-in CAGE CLAMP®
Cross sections	solid:
	0.08 mm² ... 1.5 mm² / AWG 28 ... 16
	fine-stranded:
	0.25 mm² ... 1.5 mm² / AWG 22 ... 16
Strip lengths	8 ... 9 mm / 0.33 in
Width	12 mm
Weight	60 g
EMC immunity of interference	acc. to EN 61000-6-2, marine applications
EMC emission of interference	acc. to EN 61000-6-3, marine applications

4-Channel Digital Input Module 24 V AC/DC

2-conductor connection

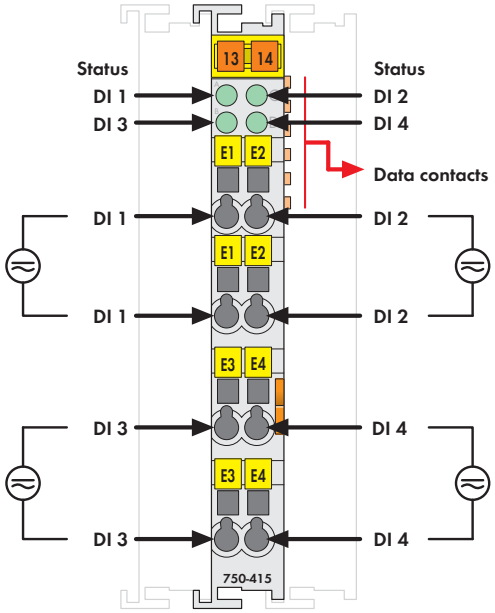

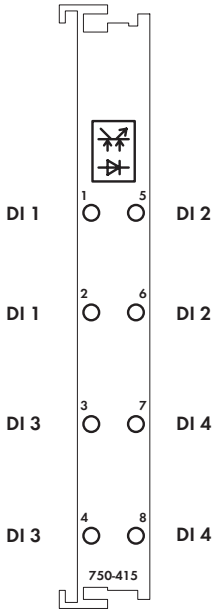

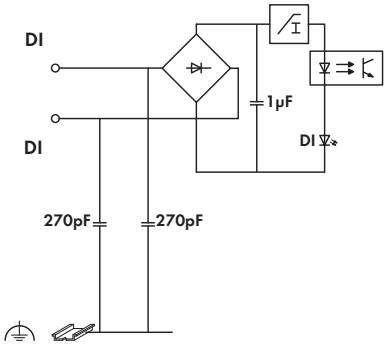

Fig. 750 Series
Delivered without miniature WSB markers

The digital input module receives control signal from the digital field devices (sensors, etc.).

Each input has a bridge rectifier and capacitor and current limitation for AC/DC operation.

Each input module has a downstream noise-rejection filter with an integrated time constant.

An optocoupler provides electrical isolation between the bus and the field side.

All inputs are isolated.

Description	Item No.	Pack. Unit
4DI 24V AC/DC 20ms	**750-415**	1
4DI 24V AC/DC 20ms (without connector)	**753-415**	1

Accessories		Item No.	Pack. Unit
	753 Series Connectors	**753-110**	25
	Coding elements	**753-150**	100
	Miniature WSB Quick marking system		
	plain	**248-501**	5
	with marking	see Section 11	

Approvals

Conformity marking	CE
Korea Certification	
Marine applications	ABS, BV, DNV, GL, KR, LR, NKK, PRS, RINA
cULus UL 508	
cULus ANSI/ISA 12.12.01	Class I, Div. 2, Grp. ABCD, T4
TÜV 12.1297 X (Brazil)	Ex nA IIC T4 Gc (750-415)
TÜV 07 ATEX 554086 X	I M2 Ex d I Mb, II 3 G Ex nA IIC T4 Gc, II 3 D Ex tc IIIC T135°C Dc
IECEx TUN 09.0001 X	Ex d I Mb, Ex nA IIC T4 Gc, Ex tc IIIC T135°C Dc

Technical Data

Number of inputs	4
Current consumption (internal)	10 mA
Signal voltage (0)	-3 V ... +5 V DC; 0 V .. 5 V AC
Signal voltage (1)	11 V ... 30 V DC; 10 V .. 27 V AC
Input filter	20 ms
Input current (typ.)	7.5 mA DC; 9.5 mA AC
Isolation	500 V system/supply ; 50 V channel/channel
Internal bit width	4 bits
Wire connection	CAGE CLAMP®
Cross sections	0.08 mm² ... 2.5 mm² / AWG 28 ... 14
Strip lengths, 750/753 Series	8 ... 9 mm / 0.33 in 9 ... 10 mm / 0.37 in
Width	12 mm
Weight	49.5 g
EMC immunity of interference	acc. to EN 61000-6-2, marine applications
EMC emission of interference	acc. to EN 61000-6-4, marine applications

4-Channel Digital Input Module 24 V AC/DC

2- to 3-conductor connection; with power jumper contacts

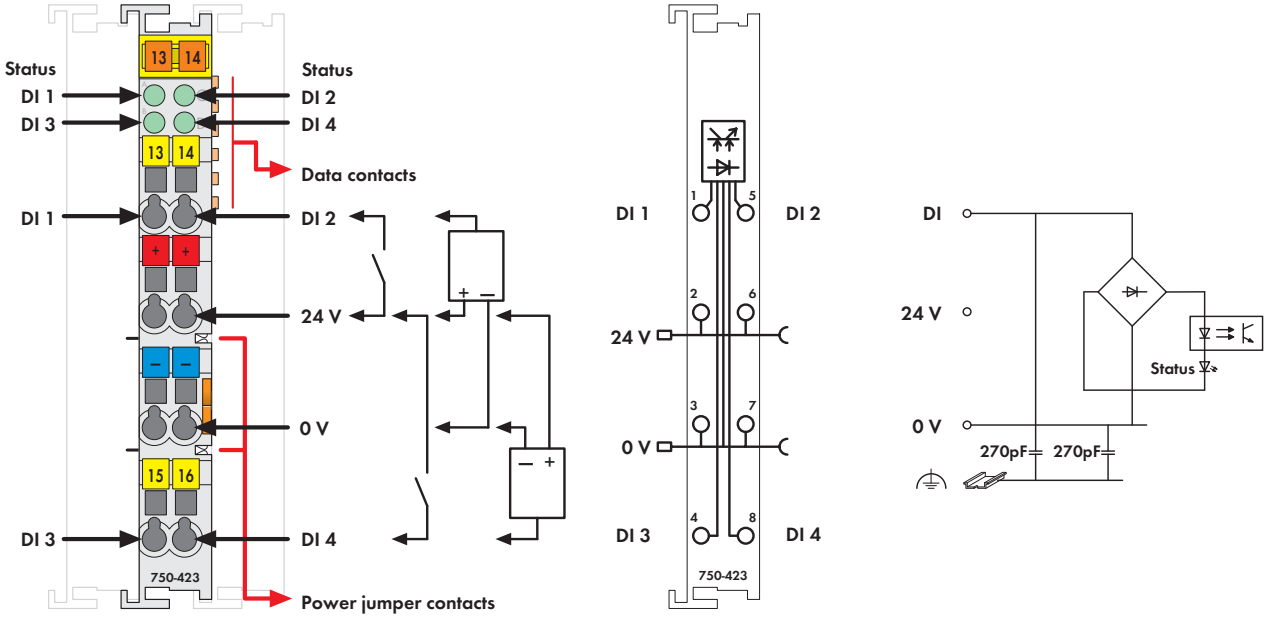

Fig. 750 Series
Delivered without miniature WSB markers

The digital input module receives control signal from the digital field devices (sensors, etc.).

Each input module has a noise-rejection filter with a time constant.

Field and system levels are electrically isolated.

Notice:
An additional supply module must be added for operation with 24VAC!

Description	Item No.	Pack. Unit
4DI 24V AC/DC, 50ms, power contacts	**750-423**	1
4DI 24V AC/DC, 50ms, power contacts (without connector)	**753-423**	1

Accessories	Item No.	Pack. Unit
753 Series Connectors	**753-110**	25
Coding elements	**753-150**	100
Miniature WSB Quick marking system		
plain	**248-501**	5
with marking	see Section 11	

Approvals

Conformity marking	CE
Korea Certification	
Marine applications	ABS, BV, DNV, GL, KR, LR, NKK, PRS, RINA
UL 508	
ANSI/ISA 12.12.01	Class I, Div. 2, Grp. ABCD, T4
TÜV 12.1297 X (Brazil)	Ex nA IIC T4 Gc (750-423)
TÜV 07 ATEX 554086 X	I M2 Ex d I Mb, II 3 G Ex nA IIC T4 Gc, II 3 D Ex tc IIIC T135°C Dc
IECEx TUN 09.0001 X	Ex d I Mb, Ex nA IIC T4 Gc, Ex tc IIIC T135°C Dc

Technical Data

Number of inputs	4
Current consumption (internal)	10 mA
Voltage via power jumper contacts	24 V DC (-15 % ... +20 %)
Signal voltage (0)	-3 V ... +5 V DC; 0 V .. 5 V AC
Signal voltage (1)	11 V ... 30 V DC; 10 V .. 27 V AC
Input filter	50 ms
Input current (typ.)	7.5 mA DC; 9.5 mA AC
Isolation	500 V system/supply
Internal bit width	4 bits
Wire connection	CAGE CLAMP®
Cross sections	0.08 mm² ... 2.5 mm² / AWG 28 ... 14
Strip lengths, 750/753 Series	8 ... 9 mm / 0.33 in 9 ... 10 mm / 0.37 in
Width	12 mm
Weight	65 g
EMC immunity of interference	acc. to EN 61000-6-2, marine applications
EMC emission of interference	acc. to EN 61000-6-4, marine applications

4-Channel Digital Input Module 42 V AC/DC

2-conductor connection

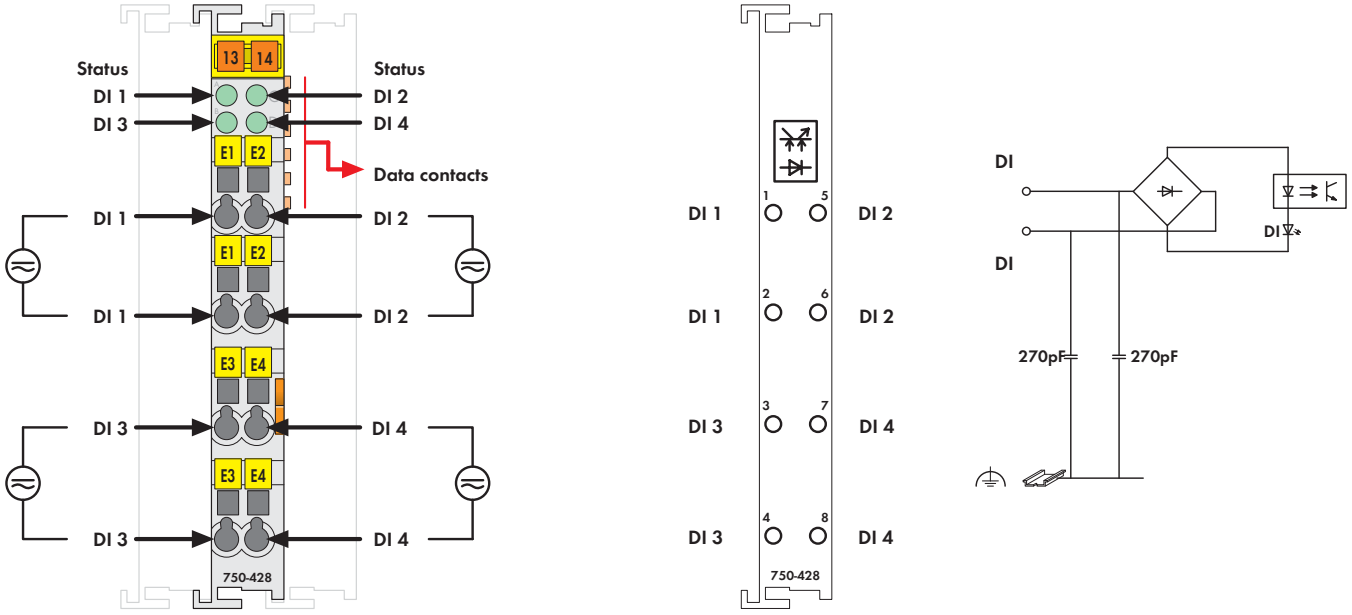

Fig. 750 Series
Delivered without miniature WSB markers

The digital input module receives control signal from the digital field devices (sensors, etc.).

Each input module has a noise-rejection filter with a time constant.

Field and system levels are electrically isolated.

All inputs are isolated.

Description	Item No.	Pack. Unit
4DI 42V AC/DC 20ms	**750-428**	1
4DI 42V AC/DC 20ms (without connector)	**753-428**	1

Accessories		Item No.	Pack. Unit
	753 Series Connectors	**753-110**	25
	Coding elements	**753-150**	100
	Miniature WSB Quick marking system		
	plain	**248-501**	5
	with marking	see Section 11	

Approvals

Conformity marking	CE
Korea Certification	
UL 508	
ANSI/ISA 12.12.01	Class I, Div. 2, Grp. ABCD, T4
TÜV 07 ATEX 554086 X	I M2 Ex d I Mb, II 3 G Ex nA IIC T4 Gc, II 3 D Ex tc IIIC T135°C Dc
IECEx TUN 09.0001 X	Ex d I Mb, Ex nA IIC T4 Gc, Ex tc IIIC T135°C Dc

Technical Data

Number of inputs	4
Current consumption (internal)	5 mA
Signal voltage (0)	-3 V ... +10 V DC; 0 V ... 10 V AC
Signal voltage (1)	30 V ... 53 V DC; 30 V ... 53 V AC
Input filter	20 ms
Input current (typ.)	3.6 mA DC; 6.0 mA AC
Isolation	500 V AC system/supply; 500 V AC channel/channel
Internal bit width	4 bits
Wire connection	CAGE CLAMP®
Cross sections	0.08 mm² ... 2.5 mm² / AWG 28 ... 14
Strip lengths, 750/753 Series	8 ... 9 mm / 0.33 in 9 ... 10 mm / 0.37 in
Width	12 mm
Weight	49.5 g
EMC immunity of interference	acc. to EN 61000-6-2
EMC emission of interference	acc. to EN 61000-6-4

2-Channel Digital Input Module 48 V DC

2- to 4-conductor connection; high-side switching

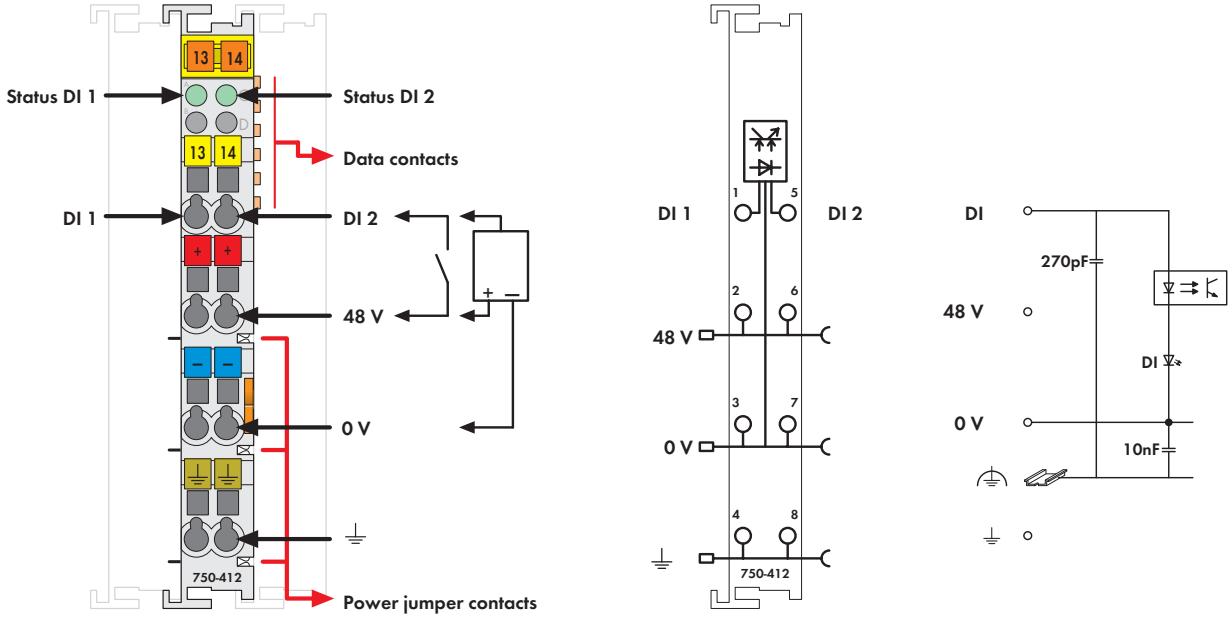

Fig. 750 Series
Delivered without miniature WSB markers

The digital input module receives control signal from the digital field devices (sensors, etc.).

Each input module has a noise-rejection filter with a time constant.

Field and system levels are electrically isolated.

Notice:
An additional supply module must be added for operation with 48VDC!

Description	Item No.	Pack. Unit
2DI 48V DC 3.0ms	**750-412**	1
2DI 48V DC 3.0ms without power jumper contacts	**750-412/000-001**	1
2DI 48V DC 3.0ms (without connector)	**753-412**	1

Accessories		Item No.	Pack. Unit
	753 Series Connectors	**753-110**	25
	Coding elements	**753-150**	100
	Miniature WSB Quick marking system		
	plain	**248-501**	5
	with marking	see Section 11	

Approvals

Conformity marking	CE
Korea Certification	
UL 508	
ANSI/ISA 12.12.01	Class I, Div. 2, Grp. ABCD, T4
TÜV 07 ATEX 554086 X	I M2 Ex d I Mb, II 3 G Ex nA IIC T4 Gc, II 3 D Ex tc IIIC T135°C Dc
IECEx TUN 09.0001 X	Ex d I Mb, Ex nA IIC T4 Gc, Ex tc IIIC T135°C Dc

Technical Data

Number of inputs	2
Current consumption (internal)	2.5 mA
Voltage via power jumper contacts	48 V DC (-15 % ... +20 %)
Signal voltage (0)	-6 V ... +10 V DC
Signal voltage (1)	34 V ... 60 V DC
Input filter	3.0 ms
Input current (typ.)	3.8 mA
Isolation	500 V system/supply
Internal bit width	2 bits
Wire connection	CAGE CLAMP®
Cross sections	0.08 mm² ... 2.5 mm² / AWG 28 ... 14
Strip lengths, 750/753 Series	8 ... 9 mm / 0.33 in 9 ... 10 mm / 0.37 in
Width	12 mm
Weight	46.5 g
EMC immunity of interference	acc. to EN 61000-6-2
EMC emission of interference	acc. to EN 61000-6-4

2-Channel Digital Input Module 60 V DC

2- to 4-conductor connection; high-side switching

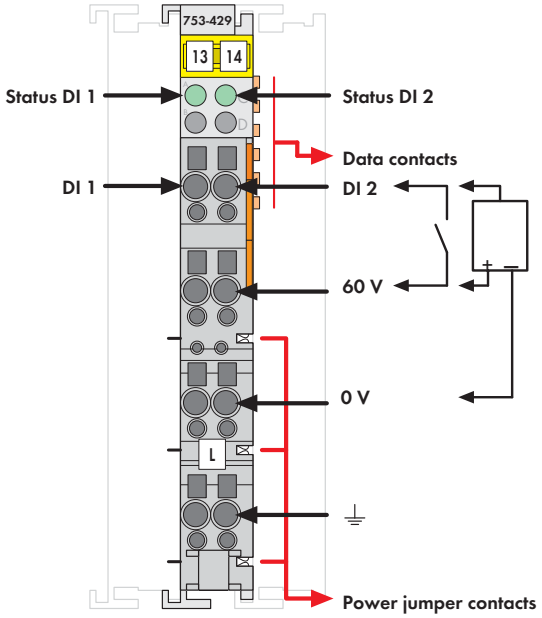

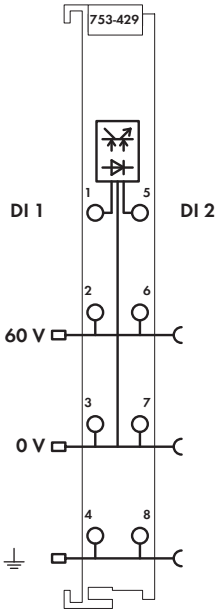

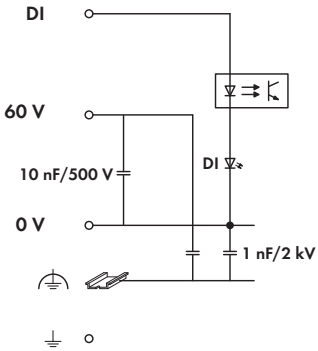

Delivered without miniature WSB markers

The digital input module receives control signal from the digital field devices (sensors, etc.).

Each input module has a noise-rejection filter with a time constant.

Field and system levels are electrically isolated.

Notice:
An additional supply module (750-612) must be added for operation with 60VDC!

Description	Item No.	Pack. Unit
2DI 60V DC 3.0ms (without connector)	**753-429**	1

Accessories		Item No.	Pack. Unit
	753 Series Connectors	**753-110**	25
	Coding elements	**753-150**	100
	Miniature WSB Quick marking system		
	plain	**248-501**	5
	with marking	see Section 11	

Approvals

Conformity marking	CE
cULus UL 508	
cULus ANSI/ISA 12.12.01	Class I, Div. 2, Grp. ABCD, T4
TÜV 07 ATEX 554086 X	I M2 Ex d I Mb, II 3 G Ex nA IIC T4 Gc, II 3 D Ex tc IIIC T135°C Dc
IECEx TUN 09.0001 X	Ex d I Mb, Ex nA IIC T4 Gc, Ex tc IIIC T135°C Dc

Technical Data

Number of inputs	2
Max. current consumption (internal)	2.5 mA
Voltage via power jumper contacts	60 V DC (-20 % ... +25 %)
Signal voltage (0)	-7.5 V ... +12 V DC
Signal voltage (1)	44 V ... 75 V DC
Input filter	3.0 ms
Input current (typ.)	2.9 ms
Isolation	500 V system/field
Internal bit width	2 bits
Wire connection	CAGE CLAMP®
Cross sections	0.08 mm² ... 2.5 mm² / AWG 28 ... 14
Strip lengths	9 ... 10 mm / 0.37 in
Width	12 mm
Weight	50 g
EMC immunity of interference	acc. to EN 61000-6-2
EMC emission of interference	acc. to EN 61000-6-4

2-Channel Digital Input Module 110 V DC

Configurable high-side or low-side switching

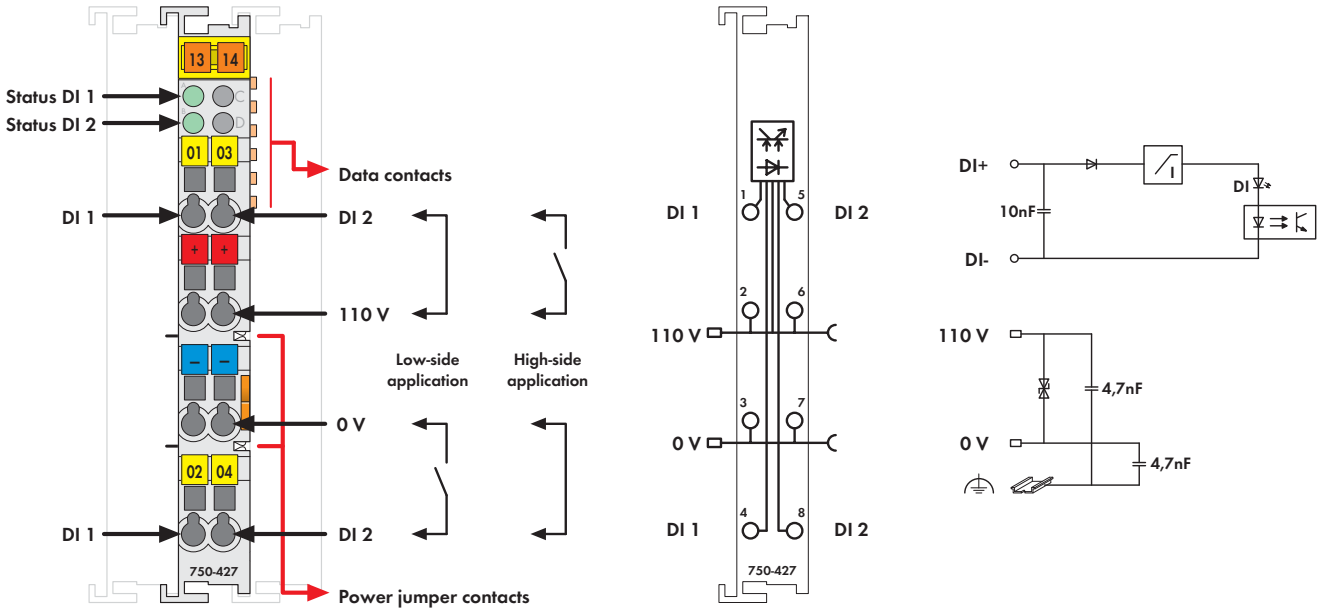

Fig. 750 Series
Delivered without miniature WSB markers

The digital input module receives control signal from the digital field devices (sensors, etc.).

The module is a 2-channel device. Each channel can be used as a high-side or low-side switching input, depending on the external wiring.

Field and system levels are electrically isolated.

Notice:
An additional supply module must be added for operation with 110VDC!

Description	Item No.	Pack. Unit
2DI 110V DC	**750-427**	1
2DI 110V DC (without connector)	**753-427**	1

Accessories		Item No.	Pack. Unit
	753 Series Connectors	**753-110**	25
	Coding elements	**753-150**	100
	Miniature WSB Quick marking system		
	plain	**248-501**	5
	with marking	see Section 11	

Approvals

Conformity marking	CE
Korea Certification	
UL 508	
ANSI/ISA 12.12.01	Class I, Div. 2, Grp. ABCD, T4
TÜV 12.1297 X (Brazil)	Ex nA IIC T4 Gc (750-427)
TÜV 07 ATEX 554086 X	I M2 Ex d I Mb, II 3 G Ex nA IIC T4 Gc, II 3 D Ex tc IIIC T135°C Dc
IECEx TUN 09.0001 X	Ex d I Mb, Ex nA IIC T4 Gc, Ex tc IIIC T135°C Dc

Technical Data

Number of inputs	2
Current consumption (internal)	2.5 mA
Voltage via power jumper contacts	110 V DC (-20 % ... +25 %)
Signal voltage (0)	< 50V
Signal voltage (1)	> 70V
Input filter	3.0 ms
Input current (typ.)	2.5 mA
Isolation	1.5 kV eff. (field/system)*; * 2.5 kV rated surge voltage
Internal bit width	2 bits
Wire connection	CAGE CLAMP®
Cross sections	0.08 mm² ... 2.5 mm² / AWG 28 ... 14
Strip lengths, 750/753 Series	8 ... 9 mm / 0.33 in 9 ... 10 mm / 0.37 in
Width	12 mm
Weight	48.3 g
EMC immunity of interference	acc. to EN 61000-6-2
EMC emission of interference	acc. to EN 61000-6-3

2-Channel Digital Input Module 220 V DC

2- to 4-conductor connection; high-side switching

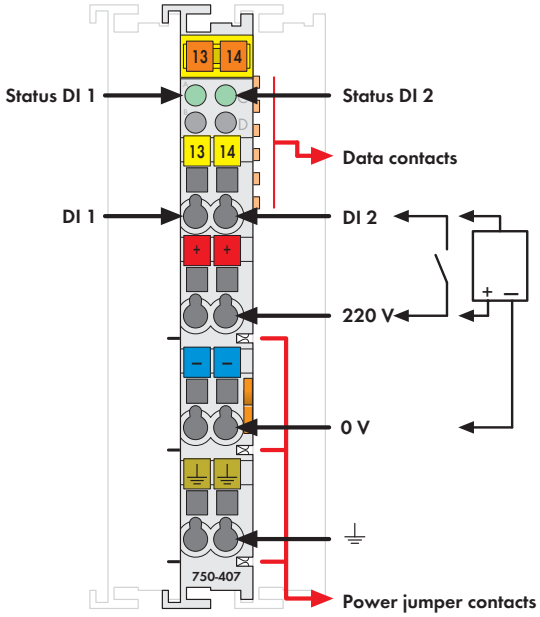

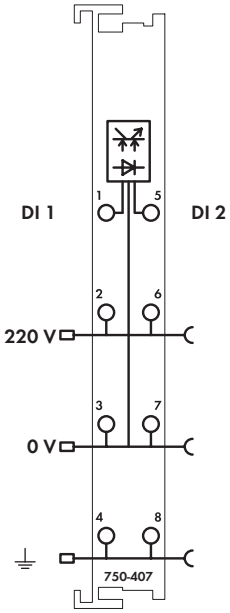

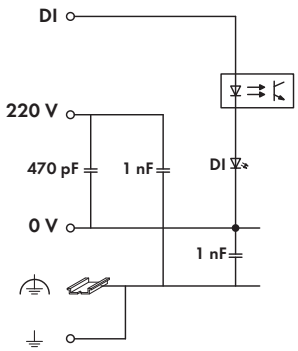

Delivered without miniature WSB markers

The digital input module receives control signal from the digital field devices (sensors, etc.).

Each input module has a 3.0ms noise-rejection filter.

Field and system levels are electrically isolated.

Description	Item No.	Pack. Unit
2DI 220V DC 3.0ms	**750-407**	1

Accessories		Item No.	Pack. Unit
Miniature WSB Quick marking system			
	plain	**248-501**	5
	with marking	see Section 11	

Approvals

Conformity marking	CE
Korea Certification	
UL 508	

Technical Data

Number of inputs	2
Current consumption (internal)	5 mA
Voltage via power jumper contacts	220 V DC (-20 % ... +25 %)
Signal voltage (0)	-3 V ... +100 V DC
Signal voltage (1)	160 V ... 286 V DC
Input filter	3.0 ms
Input current (typ.)	1.2 mA at 220 V
Isolation	2.5 kV system/supply
Internal bit width	2 bits
Wire connection	CAGE CLAMP®
Cross sections	0.08 mm² ... 2.5 mm² / AWG 28 ... 14
Strip lengths	8 ... 9 mm / 0.33 in
Width	12 mm
Weight	48 g
EMC immunity of interference	acc. to EN 61000-6-2
EMC emission of interference	acc. to EN 61000-6-3

2-Channel Digital Input Module 120 V AC

2- to 4-conductor connection; high-side switching

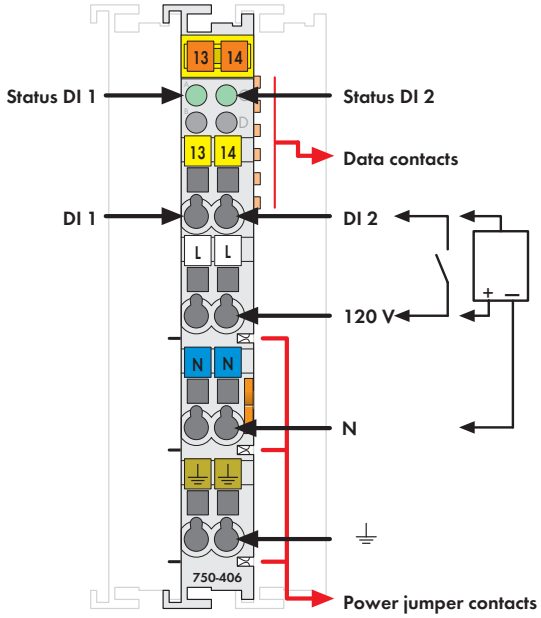

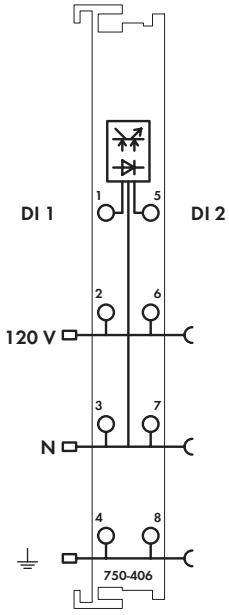

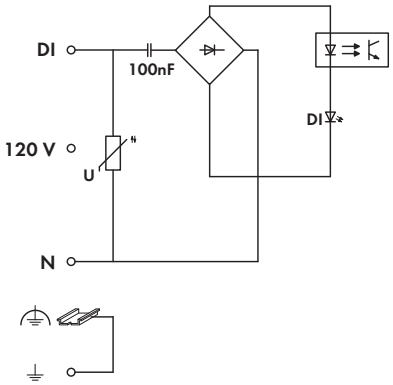

Fig. 750 Series
Delivered without miniature WSB markers

The digital input module receives control signal from the digital field devices (sensors, etc.).

Field and system levels are electrically isolated.

Notice:
An additional supply module must be added for operation with 120VAC!

Description	Item No.	Pack. Unit
2DI 120V AC	**750-406**	1
2DI 120V AC (without connector)	**753-406**	1

Accessories	Item No.	Pack. Unit
753 Series Connectors	**753-110**	25
Coding elements	**753-150**	100
Miniature WSB Quick marking system		
plain	**248-501**	5
with marking	see Section 11	

Approvals

Conformity marking	CE
Korea Certification	
Marine applications	ABS, BV, DNV, GL, KR, LR, NKK, PRS, RINA
UL 508	
ANSI/ISA 12.12.01	Class I, Div. 2, Grp. ABCD, T4
TÜV 07 ATEX 554086 X	I M2 Ex d I Mb, II 3 G Ex nA IIC T4 Gc, II 3 D Ex tc IIIC T135°C Dc
IECEx TUN 09.0001 X	Ex d I Mb, Ex nA IIC T4 Gc, Ex tc IIIC T135°C Dc

Technical Data	
Number of inputs	2
Current consumption (internal)	2 mA
Voltage via power jumper contacts	230 V AC (-15 % ... +20 %); (± 20 % 1.5 s)
Signal voltage (0)	0 V ... 20 V AC
Signal voltage (1)	79 V AC ... 1.1 V_N
Input filter	10 ms
Input current (typ.)	4.5 mA
Input frequency	f (nominal) ± 10 %
	50 Hz ± 10 %
	60 Hz ± 10 %
Isolation	1.5 kV eff. (field/system)*; * 2.5 kV rated surge voltage
Internal bit width	2 bits
Wire connection	CAGE CLAMP®
Cross sections	0.08 mm² ... 2.5 mm² / AWG 28 ... 14
Strip lengths, 750/753 Series	8 ... 9 mm / 0.33 in
	9 ... 10 mm / 0.37 in
Width	12 mm
Weight	48.5 g
EMC immunity of interference	acc. to EN 61000-6-2, marine applications
EMC emission of interference	acc. to EN 61000-6-4, marine applications

4-Channel Digital Input Module 120 (230) V AC

2-conductor connection; high-side switching

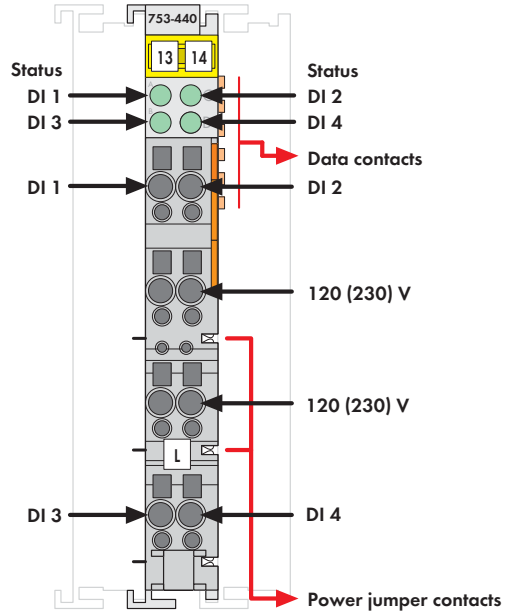

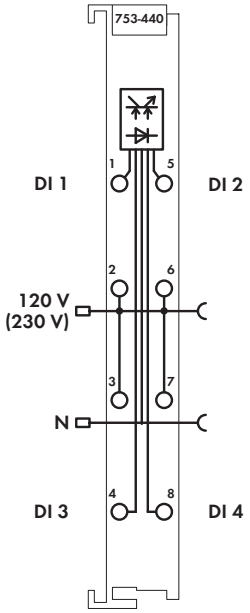

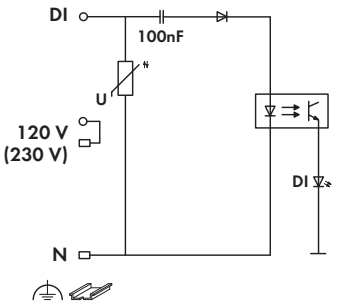

Delivered without miniature WSB markers

The digital input module receives control signal from the digital field devices (sensors, etc.).

The module is a 4-channel, 2-conductor device and four sensors may be directly connected to it.

Field and system levels are electrically isolated.

Notice:
An additional supply module must be added for operation with 120 (230) VAC!

Description	Item No.	Pack. Unit
4DI 120 (230)V AC 10ms (without connector)	**753-440**	1

Accessories		Item No.	Pack. Unit
	753 Series Connectors	**753-110**	25
	Coding elements	**753-150**	100
	Miniature WSB Quick marking system		
	plain	**248-501**	5
	with marking	see Section 11	

Approvals

Conformity marking	CE
Korea Certification	
UL 508	
ANSI/ISA 12.12.01	Class I, Div. 2, Grp. ABCD, T4
TÜV 07 ATEX 554086 X	I M2 Ex d I Mb, II 3 G Ex nA IIC T4 Gc, II 3 D Ex tc IIIC T135°C Dc
IECEx TUN 09.0001 X	Ex d I Mb, Ex nA IIC T4 Gc, Ex tc IIIC T135°C Dc

Technical Data

Number of inputs	4
Current consumption (internal)	15 mA
Voltage via power jumper contacts	90 V ... 230 V AC (-15 % ... +10 %)
Signal voltage (0)	0 V ... 40 V AC
Signal voltage (1)	79 V ... 230 V AC (-15 % ... +10 %)
Input filter	10 ms
Overvoltage protection	AC 275 V varistor
Input current (typ.)	2.3 mA at 120 V; 4.7 mA at 230 V
Input frequency	f (nominal) ± 10 %; 50 Hz ± 10 % at 230 V; 60 Hz ± 10 % at 120 V
Isolation	1.5 kV eff. (field/system)*; * 2.5 kV rated surge voltage
Internal bit width	4 bits
Wire connection	CAGE CLAMP®
Cross sections	0.08 mm² ... 2.5 mm² / AWG 28 ... 14
Strip lengths	9 ... 10 mm / 0.37 in
Width	12 mm
Weight	43.5 g
EMC immunity of interference	acc. to EN 61000-6-2
EMC emission of interference	acc. to EN 61000-6-4

2-Channel Digital Input Module 230 V AC

2- to 4-conductor connection; high-side switching

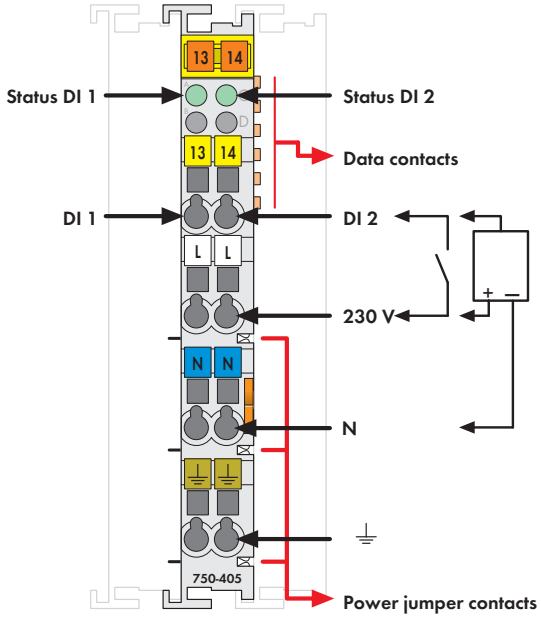

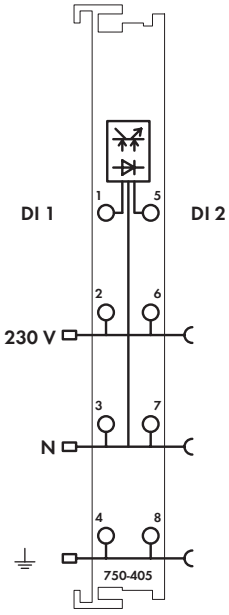

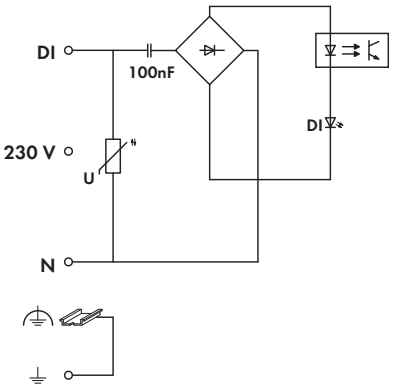

Fig. 750 Series
Delivered without miniature WSB markers

The digital input module receives control signal from the digital field devices (sensors, etc.).

Field and system levels are electrically isolated.

Notice:
An additional supply module must be added for operation with 230VAC!

Description	Item No.	Pack. Unit
2DI 230V AC	**750-405**	1
2DI 230V AC (without connector)	**753-405**	1

Accessories	Item No.	Pack. Unit
753 Series Connectors	**753-110**	25
Coding elements	**753-150**	100
Miniature WSB Quick marking system		
plain	**248-501**	5
with marking	see Section 11	

Approvals

Conformity marking	CE
Korea Certification	
Marine applications	ABS, BV, DNV, GL, KR, LR, NKK, PRS, RINA
UL 508	
ANSI/ISA 12.12.01	Class I, Div. 2, Grp. ABCD, T4
TÜV 07 ATEX 554086 X	I M2 Ex d I Mb, II 3 G Ex nA IIC T4 Gc, II 3 D Ex tc IIIC T135°C Dc
IECEx TUN 09.0001 X	Ex d I Mb, Ex nA IIC T4 Gc, Ex tc IIIC T135°C Dc

Technical Data

Number of inputs	2
Current consumption (internal)	2 mA
Voltage via power jumper contacts	230 V AC (-15 % ... +20 %); (± 20 % 1.5 s)
Signal voltage (0)	0 V ... 40 V AC
Signal voltage (1)	164 V AC ... 1.1 V_N
Input filter	10 ms
Input current (typ.)	6.5 mA
Input frequency	f (nominal) ± 10 %
	50 Hz ± 10 %
	60 Hz ± 10 %
Isolation	1.5 kV eff. (field/system)*; * 2.5 kV rated surge voltage
Internal bit width	2 bits
Wire connection	CAGE CLAMP®
Cross sections	0.08 mm² ... 2.5 mm² / AWG 28 ... 14
Strip lengths, 750/753 Series	8 ... 9 mm / 0.33 in 9 ... 10 mm / 0.37 in
Width	12 mm
Weight	48.7 g
EMC immunity of interference	acc. to EN 61000-6-2, marine applications
EMC emission of interference	acc. to EN 61000-6-4, marine applications

2-Channel Digital Input Module NAMUR

Proximity switch acc. to DIN EN 60947-5-6

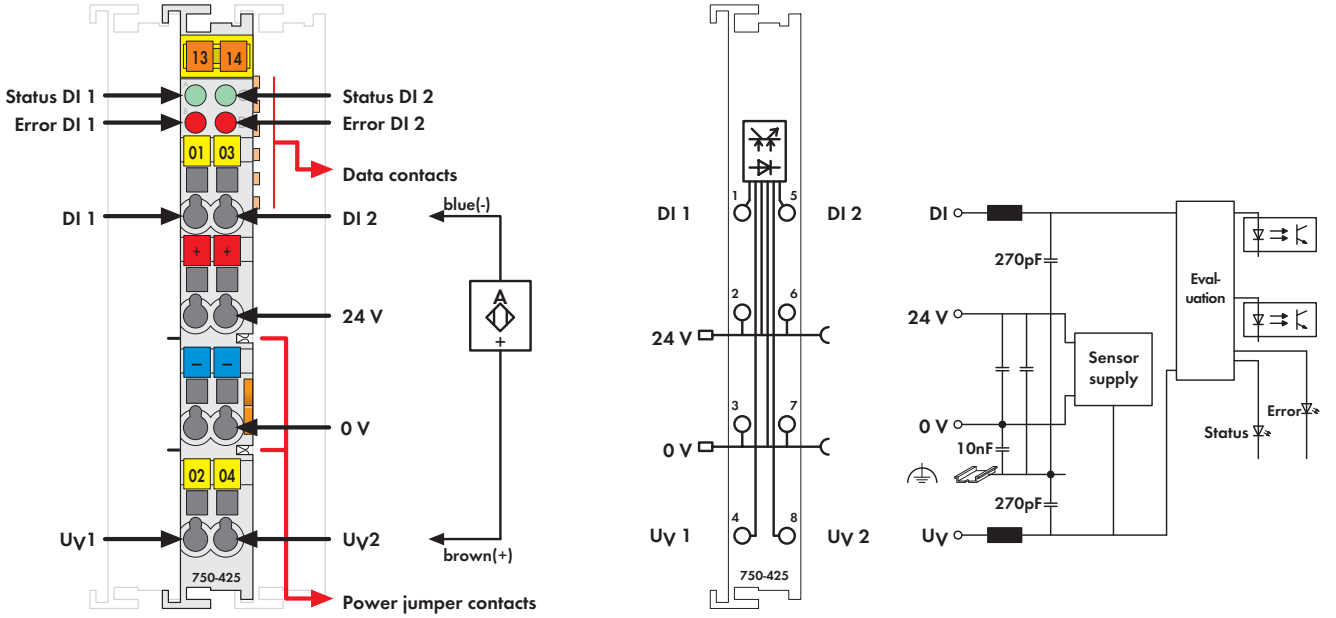

Fig. 750 Series
Delivered without miniature WSB markers

The digital input module receives control signals from NAMUR proximity switches (based on DIN EN 60947-5-6) in the field.

The voltage supply of each channel of the sensors is delivered by a short circuit proof 8.2V voltage source. A short circuit or a line break is indicated in the process image (1 bit) and via the red LED.

The green LED indicates the input status:
- Signal current (0) LED off
- Signal current (1) LED on

Field and system levels are electrically isolated.

Description	Item No.	Pack. Unit
2DI NAMUR	**750-425**	1
2DI NAMUR (without connector)	**753-425**	1

Accessories		Item No.	Pack. Unit
	753 Series Connectors	**753-110**	25
	Coding elements	**753-150**	100
	Miniature WSB Quick marking system		
	plain	**248-501**	5
	with marking	see Section 11	

Approvals

Conformity marking	CE
Korea Certification	KC
Marine applications	ABS, BV, DNV, GL, KR, LR, NKK, PRS, RINA
cULus UL 508	
cULus ANSI/ISA 12.12.01	Class I, Div. 2, Grp. ABCD, T4
TÜV 12.1297 X (Brazil)	Ex nA IIC T4 Gc (750-425)
TÜV 07 ATEX 554086 X	I M2 Ex d I Mb, II 3 G Ex nA IIC T4 Gc, II 3 D Ex tc IIIC T135°C Dc
IECEx TUN 09.0001 X	Ex d I Mb, Ex nA IIC T4 Gc, Ex tc IIIC T135°C Dc

Technical Data

Number of inputs	2
Current consumption typ. (internal)	5 mA
Voltage via power jumper contacts	24 VDC (-25 % ... +30 %)
Signal current (0)	≤ 1.2 mA
Signal current (1)	≥ 2.1 mA
Input filter	3.0 ms
Switching hysteresis	0.2 mA
Open-circuit voltage	8.2 VDC
Input resistance	1 kΩ
Input pulse duration	≥ 5 ms
Input pulse separation	≥ 3 ms
Short-circuit current	≤ 8.2 mA
Short-circuit monitoring	> 6.5 mA
Line break monitoring	< 0.2 mA
Sensor supply V_v	8.2 VDC
Isolation	500 V system/supply
Internal bit width	4 bits in, 2 bits data, 2 bits error (short circuit/line break)
Wire connection	CAGE CLAMP®
Cross sections	0.08 mm² ... 2.5 mm² / AWG 28 ... 14
Strip lengths, 750/753 Series	8 ... 9 mm / 0.33 in 9 ... 10 mm / 0.37 in
Width	12 mm
Weight	51 g
EMC immunity of interference	acc. to EN 61000-6-2, marine applications
EMC emission of interference	acc. to EN 61000-6-4, marine applications

Intruder Detection

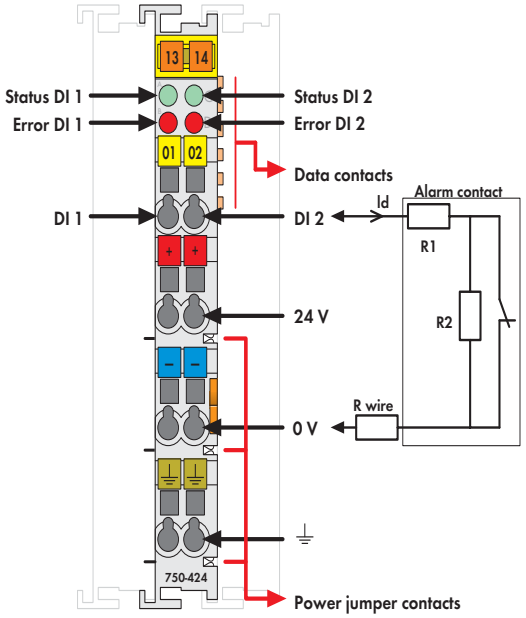

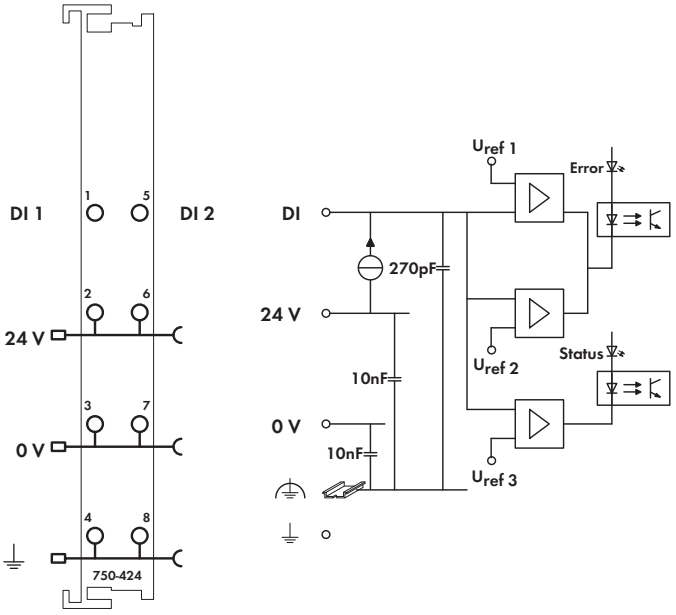

Fig. 750 Series
Delivered without miniature WSB markers

This module incorporates a current loop which makes it possible to monitor alarm contacts with a fixed resistance ratio (R1, R2), for intruder detection.

The module indicates the current status of the contact via LEDs and via status bits in the process image.

Description	Item No.	Pack. Unit
2DI 24V DC Intruder Detection	**750-424**	1
2DI 24V DC Intruder Detection (without connector)	**753-424**	1

Accessories	Item No.	Pack. Unit
753 Series Connectors	**753-110**	25
Coding elements	**753-150**	100
Miniature WSB Quick marking system		
plain	**248-501**	5
with marking	see Section 11	

Approvals

Conformity marking	CE
Korea Certification	
Marine applications	ABS, BV, DNV, GL, KR, LR, NKK, PRS, RINA
UL 508	
ANSI/ISA 12.12.01	Class I, Div. 2, Grp. ABCD, T4
TÜV 12.1297 X (Brazil)	Ex nA IIC T4 Gc (750-424)
TÜV 07 ATEX 554086 X	I M2 Ex d I Mb, II 3 G Ex nA IIC T4 Gc, II 3 D Ex tc IIIC T135°C Dc
IECEx TUN 09.0001 X	Ex d I Mb, Ex nA IIC T4 Gc, Ex tc IIIC T135°C Dc

Technical Data

Number of inputs	2
Current consumption typ. (internal)	6 mA
Current consumption max. (field side)	16 mA/24 V DC
Voltage via power jumper contacts	24 V DC (-25 % ... +30 %)
Loop current typ. (Id)	1 mA
R1	1.5 kΩ (± 5 %)
R2	2.2 kΩ (± 5 %)
R wire (max.)	200 Ω
Isolation	500 V system/supply
Internal bit width	4 bits
Wire connection	CAGE CLAMP®
Cross sections	0.08 mm² ... 2.5 mm² / AWG 28 ... 14
Strip lengths, 750/753 Series	8 ... 9 mm / 0.33 in
	9 ... 10 mm / 0.37 in
Width	12 mm
Weight	36 g
EMC immunity of interference	acc. to EN 61000-6-2, marine applications
EMC emission of interference	acc. to EN 61000-6-4, marine applications

8-Channel PTC Module

Connects to PTC thermistors according to DIN 44081/44082

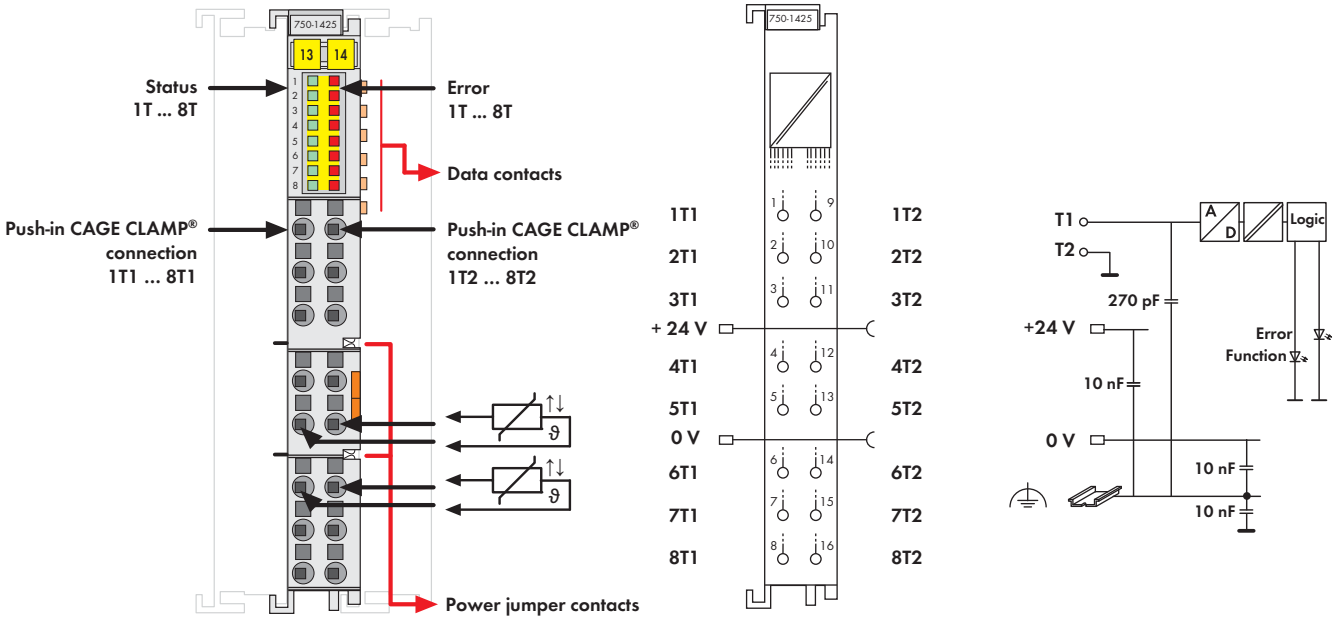

Just 12 mm wide, the PTC module features eight channels to connect PTC thermistors according to DIN 44081 and DIN 44082 for thermal monitoring (overload protection) of motors, machinery, bearings, etc.
Up to 6 PTC thermistors can be connected in series per channel. If the nominal response temperature (ϑnat) is exceeded, a bit is set in the module's input process image. In addition, wire breaks and short circuits are monitored for each channel. If an error occurs, a bit is also set in the input process image.
One green and one red status LED per channel indicate overtemperature or wiring errors.
Field and system levels are electrically isolated.

Description	Item No.	Pack. Unit
8DI PTC	**750-1425**	1

Accessories		Item No.	Pack. Unit
Miniature WSB Quick marking system			
	plain	**248-501**	5
	with marking	see Section 11	
Operating tool, with partially insulated shaft, type 1, blade (2.5 x 0.4) mm		**210-719**	50

Approvals

Conformity marking	CE
Marine applications	GL

Technical Data

Number of inputs	8
Power supply	via system voltage DC/DC
Current consumption typ. (internal)	52 mA
Power consumption $P_{max.}$	260 mW
Sensor connection	2-wire; Sensor voltage:
	≤ 2.5 V / ≤ 7.5 V (based on resistance
	value);
	Sensor current: ≤ 1 mA;
	Number of PTCs per channel:
	max. 6 PTCs in series;
	Operating value (status bit "1" to "0"):
	R ≥ 3 kΩ;
	Return value (status bit "0" to "1"):
	≤ 1.5 kΩ;
	Hysteresis: R = 1.5 kΩ;
	Wire break value: R ≥ 8 kΩ;
	Short circuit value: R ≤ 20 Ω
Input filter	100 ms
Isolation	500 V system/field
Bit width	16-bit (status)
Wire connection	Push-in CAGE CLAMP®
Cross sections	solid:
	0.08 mm² ... 1.5 mm² / AWG 28 ... 16
	fine-stranded:
	0.25 mm² ... 1.5 mm² / AWG 22 ... 16
Strip lengths	8 ... 9 mm / 0.33 in
Width	12 mm
Weight	60.2 g
EMC immunity of interference	acc. to EN 61000-6-2, marine applications
EMC emission of interference	acc. to EN 61000-6-4, marine applications

Digital Output Modules

Housing Design 750/753 Series	
Dimensions (mm) W x H x L	12 x 65 x 100 (Height from upper edge of the DIN-rail)
Wire connection	CAGE CLAMP®
Cross sections	0.08 mm² ... 2.5 mm² / 28 ... 14 AWG
Strip lengths	750 Series: 8 ... 9 mm / 0.33 in. 753 Series: 9 ... 10 mm / 0.37 in.

Special Housing Design 750 Series	
Dimensions (mm) W x H x L	24 x 65 x 100 (Height from upper edge of the DIN-rail)

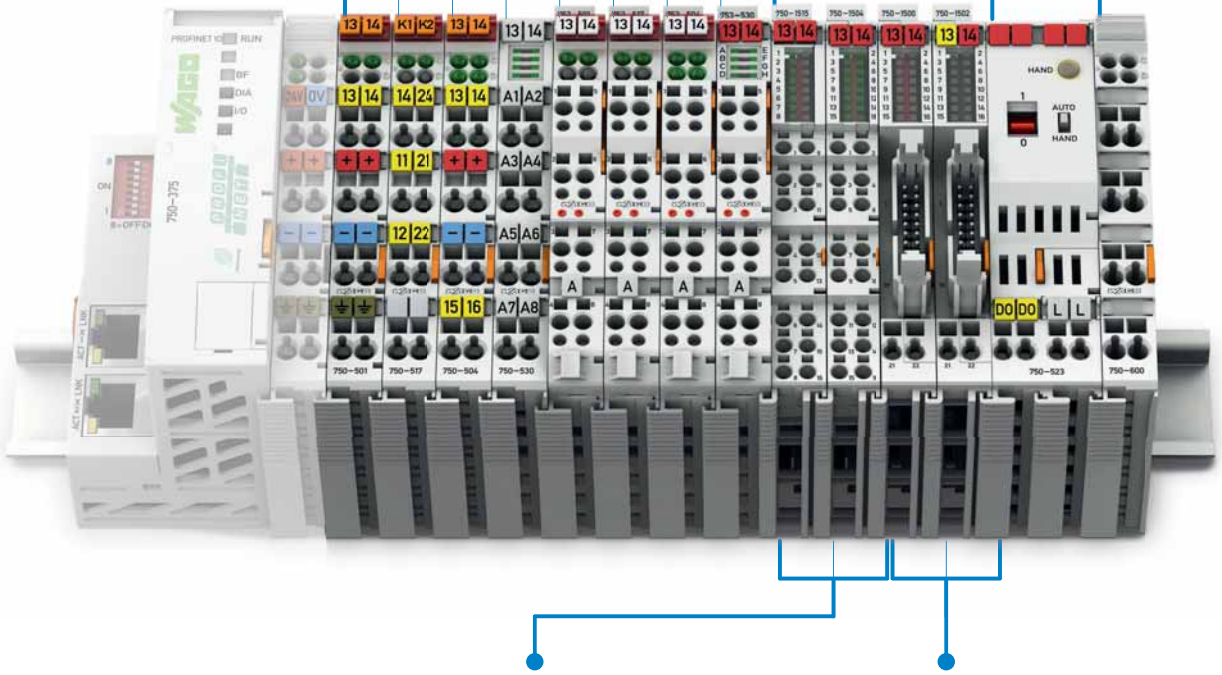

Housing Design 750 Series with Push-in CAGE CLAMP® Connection (16 Connection Terminals)	
Wire connection	Push-in CAGE CLAMP®
Cross sections	solid: 0.08 mm² ... 2.5 mm² / 28 ... 16 AWG fine-stranded: 0.25 mm² ... 1.5 mm² / 22 ... 16 AWG
Strip lengths	8 ... 9 mm / 0.33 in.

Housing Design 750 Series with Ribbon Cable Connector	
Dimensions (mm) W x H x L	12 x 73 x 100 (Height from upper edge of the DIN-rail)
Wire connection	20-pole male connector/CAGE CLAMP®

PROFIsafe

I/O-Systems; Digital Output Modules

Contents

Function	1-Channel DO	2-Channel DO	4-Channel DO	8-Channel DO	8-Channel DIO	16-Channel DO	Description	Item No. Standard	Item No. /T Extended operating temperature range: -20 °C ... +60 °C	Item No. Pluggable	Page
5 VDC			■				High-side switch.	750-519			220
5/12 VDC				■			(5 ... 14 VDC) 1 A, short-circuit protec., high-side switch.	750-534		753-534	221
24 VDC		■					0.5 A, short-circuit protec., high-side switch.	750-501		753-501	222
		■					0.5 A, short-circuit protec., high-side switch., interference-free	750-501/000-800		753-501/000-800	222
		■					2.0 A, short-circuit protec., high-side switch.	750-502		753-502	223
		■					2.0 A, short-circuit protec., high-side switch., interference-free	750-502/000-800		753-502/000-800	223
		■					0.5 A with diagn., short-circuit protec., high-side switch.	750-506		753-506	224
		■					0.5 A with diagn., short-circuit protec., high-side switch., interference-free	750-506/000-800			224
		■					2.0 A with diagn., short-circuit protec., high-side switch.	750-508		753-508	225
		■					2.0 A with diagn., short-circuit protec., high-side switch., interference-free	750-508/000-800			225
			■				0.5 A, short-circuit protec., high-side switch.	750-504	750-504/025-000	753-504	226
			■				0.5 A, short-circuit protec., high-side switch., interference-free	750-504/000-800	750-504/025-800		226
			■				(2-conductor) 0,5 A, short-circuit protec., high-side switch.	750-531		753-531	227
			■				(2-conductor) 0,5 A, short-circuit protec., high-side switch., interference-free	750-531/000-800		753-531/000-800	227
			■				Short-circuit protec., low-side switch.	750-516		753-516	228
			■				(2-cond.) 0.5 A with Diagn., short-circuit protec., high-side switch.	750-532			229
				■			0.5 A, short-circuit protec., high-side switch.	750-530	750-530/025-000	753-530	230
				■			0.5 A, short-circuit protec., low-side switch.	750-536		753-536	231
				■			0.5 A with diagn., short-circuit protec., high-side switch.	750-537		753-537	232
				■			0.5 A, 2-conductor	750-1515			235
				■			0.5 A, low-side switch., 2-conductor	750-1516			236
					■		0.5 A, high-side switch., ribbon cable	750-1502			233
					■		0.5 A, high-side switch.	750-1506			234
						■	0.5 A, high-side switch., ribbon cable	750-1500			237
						■	0.5 A, high-side switch.	750-1504			238
						■	0.5 A, low-side switch., ribbon cable	750-1501			239
						■	0.5 A, low-side switch.	750-1505			240
120/230 VAC			■				(120 ... 230 VAC) 0.25 A, high-side switch.			753-540	241
230 V AC/DC		■					0.3 A, solid state relay	750-509		753-509	242
230 VAC		■					0.5 A, solid state relay (3 A < 30 ms)	750-522			243
Relay		■					2 changeover contacts, potential free, 125 VAC, 0.5 A	750-514		753-514	244
		■					2 changeover contacts, potential free, 230 VAC, 1 A	750-517		753-517	245
		■					2 make contacts, non-floating, 230 VAC, 2 A	750-512		753-512	246
		■					2 make contacts, potential free, 230 VAC, 2 A	750-513		753-513	247
		■					2 make contacts, potential free, 230 VAC, 2 A, without power jumper contact	750-513/000-001			247
	■						Relay with manual operation, potential free, 1 make contact, 230 VAC, 16 A	750-523			248

Functional Safety	see Section 4.8
Ex i	see Section 4.9

4-Channel Digital Output Module 5 V DC

Short-circuit protected; high-side switching

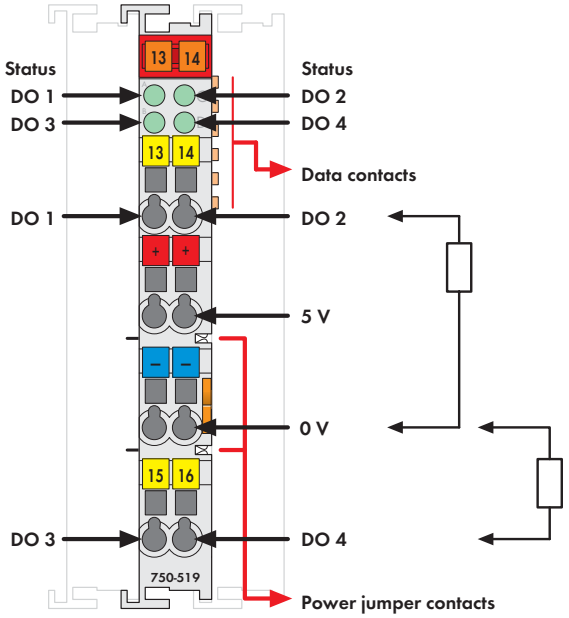

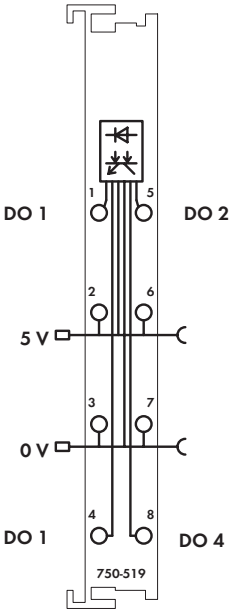

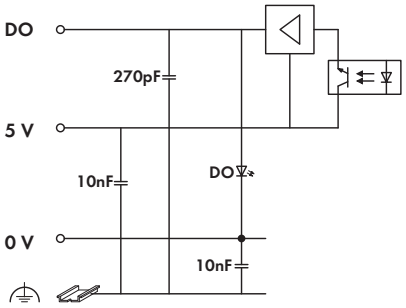

Delivered without miniature WSB markers

Control signals are transmitted from the automation device to connected actuators via the digital output module.

All outputs are electronically short-circuit-protected.

Field and system levels are electrically isolated.

Notice:
An additional supply module must be added for operation with 5VDC!

Description	Item No.	Pack. Unit
4DO 5V DC 20mA	**750-519**	10[1]

[1] Also available individually

Accessories		Item No.	Pack. Unit
Miniature WSB Quick marking system			
	plain	**248-501**	5
	with marking	see Section 11	

Approvals

Conformity marking	CE
Korea Certification	
UL 508	
ANSI/ISA 12.12.01	Class I, Div. 2, Grp. ABCD, T4
DEKRA 11 ATEX 0203 X	II 3 G Ex nA II T4

Technical Data

No. of outputs	4
Max. current consumption (internal)	10 mA
Voltage via power jumper contacts	5 V DC
Type of load	resistive, inductive, lamps
Max. switching frequency	5 kHz
Output current (max.)	20 mA short-circuit protected
Current consumption typ. (field side)	14 mA
Isolation	500 V system/supply
Internal bit width	4 bits in; 4 bits out
Wire connection	CAGE CLAMP®
Cross sections	0.08 mm² ... 2.5 mm² / AWG 28 ... 14
Strip lengths	8 ... 9 mm / 0.33 in
Width	12 mm
Weight	50 g
EMC immunity of interference	acc. to EN 61000-6-2
EMC emission of interference	acc. to EN 61000-6-4

8-Channel Digital Output Module 5 … 14 V DC

Short-circuit protected; high-side switching

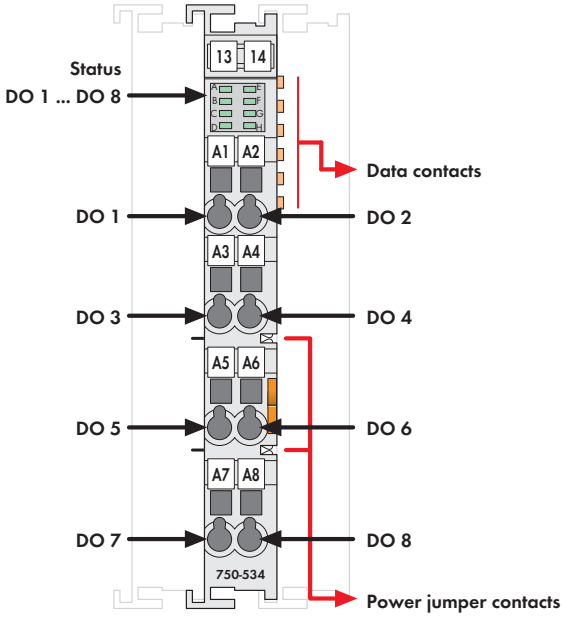

Fig. 750 Series
Delivered without miniature WSB markers

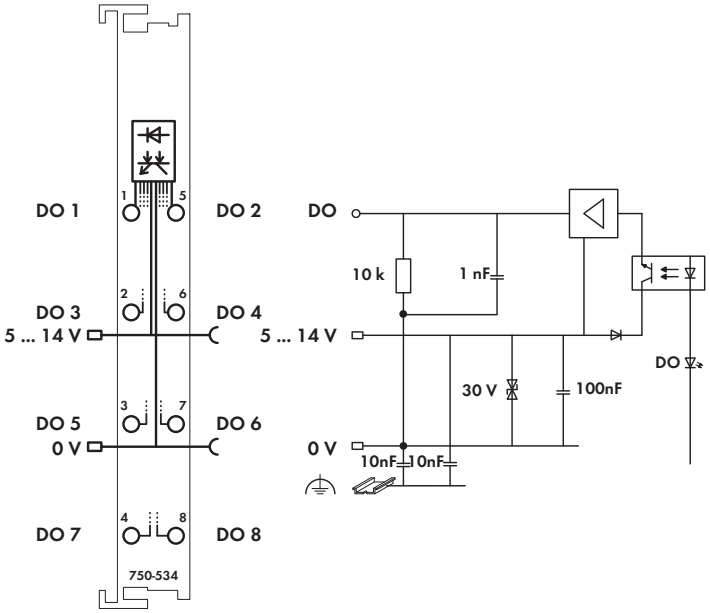

NOTE: Connection point marking (i.e., 1 … 8) does not refer to channel assignment

The digital output module provides 8 channels at a width of just 12mm (0.47in.).

The connected load is switched via digital output from the control system.

All outputs are short-circuit proof.

Field and system levels are electrically isolated.

Notice:
An additional supply module must be added for operation with 5 – 14VDC!

Description	Item No.	Pack. Unit
8DO 5 (14) V DC 1A	**750-534**	1
8DO 5 (14) V DC 1A (without connector)	**753-534**	1

Accessories		Item No.	Pack. Unit
	753 Series Connectors	**753-110**	25
	Coding elements	**753-150**	100
	Miniature WSB Quick marking system		
	plain	**248-501**	5
	with marking	see Section 11	

Approvals

Conformity marking	CE
Korea Certification	
Marine applications	GL
UL 508	
ANSI/ISA 12.12.01	Class I, Div. 2, Grp. ABCD, T4
TÜV 07 ATEX 554086 X	I M2 Ex d I Mb, II 3 G Ex nA IIC T4 Gc, II 3 D Ex tc IIIC T135°C Dc
IECEx TUN 09.0001 X	Ex d I Mb, Ex nA IIC T4 Gc, Ex tc IIIC T135°C Dc

Technical Data

No. of outputs	8
Current consumption (internal)	20 mA
Voltage via power jumper contacts	5 V … 14 V DC (-15 % … +20 %)
Type of load	resistive, inductive
Max. switching frequency	2kHz
Output current	1 A, short-circuit-protected
Inductive load switch off energy dissipation W (max.)	0.26 J; L max = 2 x W max / I^2
Current consumption typ. (field side)	25 mA / module + load
Isolation	500 V system/supply
Internal bit width	8 bits
Wire connection	CAGE CLAMP®
Cross sections	0.08 mm² … 2.5 mm² / AWG 28 … 14
Strip lengths, 750/753 Series	8 … 9 mm / 0.33 in 9 … 10 mm / 0.37 in
Width	12 mm
Weight	48 g
EMC immunity of interference	acc. to EN 61131-2, marine applications
EMC emission of interference	acc. to EN 61131-2, marine applications

2-Channel Digital Output Module 24 V DC

Short-circuit protected; high-side switching

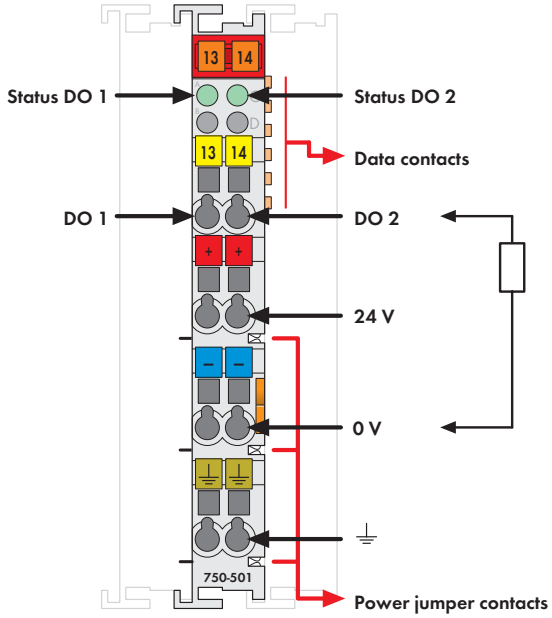

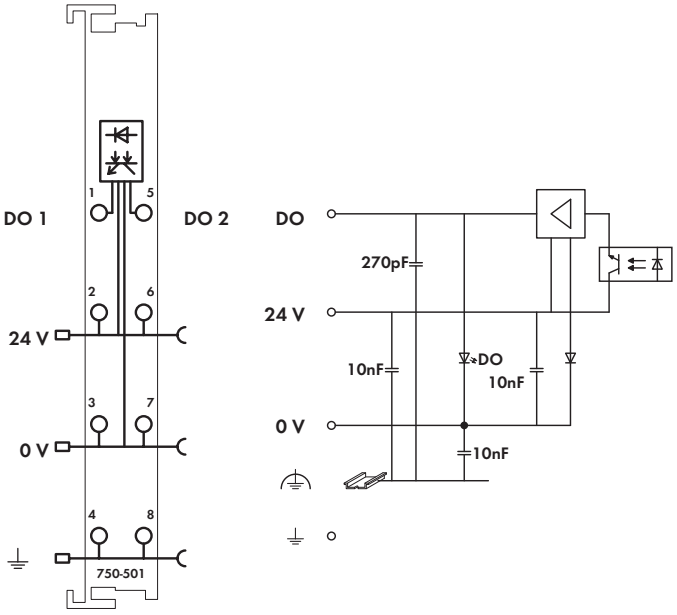

Fig. 750 Series
Delivered without miniature WSB markers

Control signals are transmitted from the automation device to connected actuators via the digital output module.

All outputs are short-circuit proof.

Field and system levels are electrically isolated.

Description	Item No.	Pack. Unit
2DO 24V DC 0.5A	**750-501**	1
2DO 24V DC 0.5A/R*	**750-501/000-800**	1
* /R: Interference-free for safety function applications (see manual)		
2DO 24V DC 0.5A (without connector)	**753-501**	1
2DO 24V DC 0.5A/R* (without connector)	**753-501/000-800**	1

Accessories	Item No.	Pack. Unit
753 Series Connectors	**753-110**	25
Coding elements	**753-150**	100
Miniature WSB Quick marking system		
plain	**248-501**	5
with marking	see Section 11	

Approvals

Conformity marking	CE
Korea Certification	
Marine applications (versions upon request)	ABS, BV, DNV, GL, KR, LR, NKK, PRS, RINA
UL 508	
ANSI/ISA 12.12.01	Class I, Div. 2, Grp. ABCD, T4
TÜV 07 ATEX 554086 X	I M2 Ex d I Mb, II 3 G Ex nA IIC T4 Gc, II 3 D Ex tc IIIC T135°C Dc
IECEx TUN 09.0001 X	Ex d I Mb, Ex nA IIC T4 Gc, Ex tc IIIC T135°C Dc

Technical Data

No. of outputs	2
Current consumption (internal)	3.5 mA
Voltage via power jumper contacts	24 V DC (-25 % ... +30 %)
Type of load	resistive, inductive, lamps
Max. switching frequency	5 kHz
Output current (max.)	0.5 A
Inductive load switch off energy	
dissipation W (max.)	0.5 J; L max = 2 x W max / I^2
Current consumption typ. (field side)	15 mA / module + charge
Isolation	500 V system/supply
Internal bit width	2 bits
Wire connection	CAGE CLAMP®
Cross sections	0.08 mm² ... 2.5 mm² / AWG 28 ... 14
Strip lengths, 750/753 Series	8 ... 9 mm / 0.33 in
	9 ... 10 mm / 0.37 in
Width	12 mm
Weight	47.4 g
EMC immunity of interference	acc. to EN 61000-6-2, marine applications
EMC emission of interference	acc. to EN 61000-6-4, marine applications

2-Channel Digital Output Module 24 V DC

Short-circuit protected; high-side switching

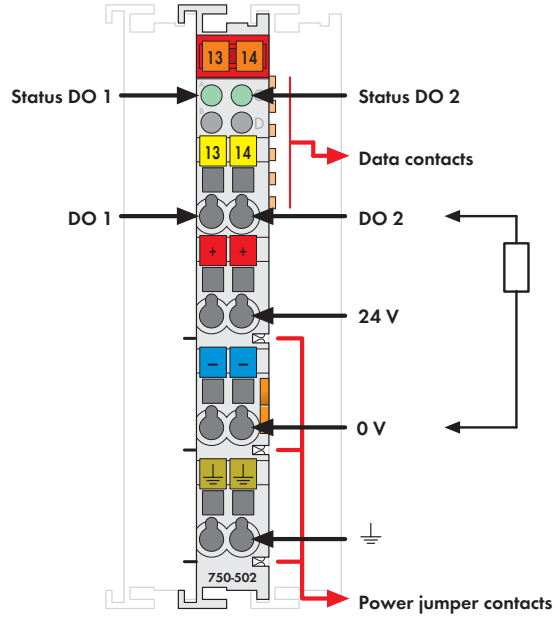

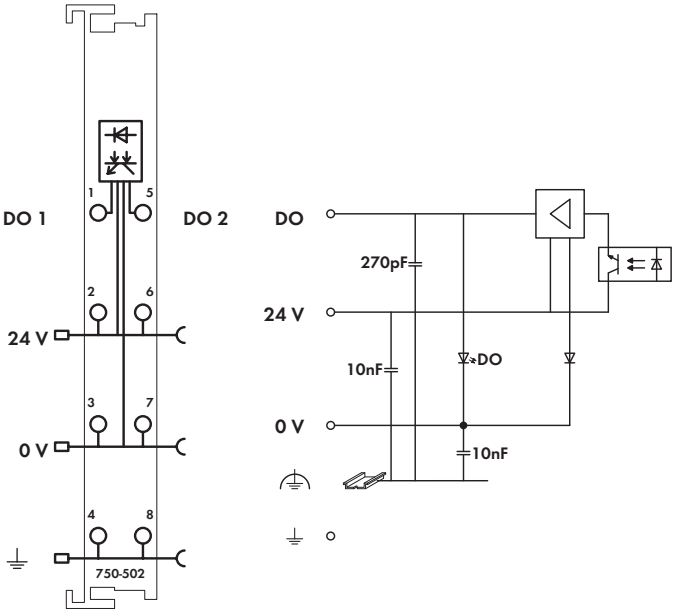

Fig. 750 Series
Delivered without miniature WSB markers

Control signals are transmitted from the automation device to connected actuators via the digital output module.

All outputs are short-circuit proof.

Field and system levels are electrically isolated.

Description	Item No.	Pack. Unit
2DO 24V DC 2.0A	**750-502**	1
2DO 24V DC 2.0A/R*	**750-502/000-800**	1
* /R: Interference-free for safety function applications (see manual)		
2DO 24V DC 2.0A (without connector)	**753-502**	1
2DO 24V DC 2.0A/R* (without connector)	**753-502/000-800**	1

Accessories	Item No.	Pack. Unit
753 Series Connectors	**753-110**	25
Coding elements	**753-150**	100
Miniature WSB Quick marking system		
plain	**248-501**	5
with marking	see Section 11	

Approvals

Conformity marking	CE
Korea Certification	KC
Marine applications (versions upon request)	ABS, BV, DNV, GL, KR, LR, NKK, PRS, RINA
cULus UL 508	
cULus ANSI/ISA 12.12.01	Class I, Div. 2, Grp. ABCD, T4
TÜV 07 ATEX 554086 X	I M2 Ex d I Mb,
	II 3 G Ex nA IIC T4 Gc,
	II 3 D Ex tc IIIC T135°C Dc
IECEx TUN 09.0001 X	Ex d I Mb,
	Ex nA IIC T4 Gc,
	Ex tc IIIC T135°C Dc

Technical Data

No. of outputs	2
Current consumption (internal)	3.5 mA
Voltage via power jumper contacts	24 V DC (-25 % ... +30 %)
Type of load	resistive, inductive, lamps
Max. switching frequency	2.5 kHz
Output current (max.)	2 A
Short-circuit limitation (typ.) Pwm	35 A (44 A peak)
Inductive load switch off energy dissipation W (max.)	1.7 J; L max = 2 x W max / I^2
Current consumption typ. (field side)	15 mA / module + charge
Isolation	500 V system/supply
Internal bit width	2 bits
Wire connection	CAGE CLAMP®
Cross sections	0.08 mm² ... 2.5 mm² / AWG 28 ... 14
Strip lengths, 750/753 Series	8 ... 9 mm / 0.33 in
	9 ... 10 mm / 0.37 in
Width	12 mm
Weight	51.5 g
EMC immunity of interference	acc. to EN 61000-6-2, marine applications
EMC emission of interference	acc. to EN 61000-6-4, marine applications

2-Channel Digital Output Module 24 V DC

Short-circuit protected; high-side switching; with diagnostics

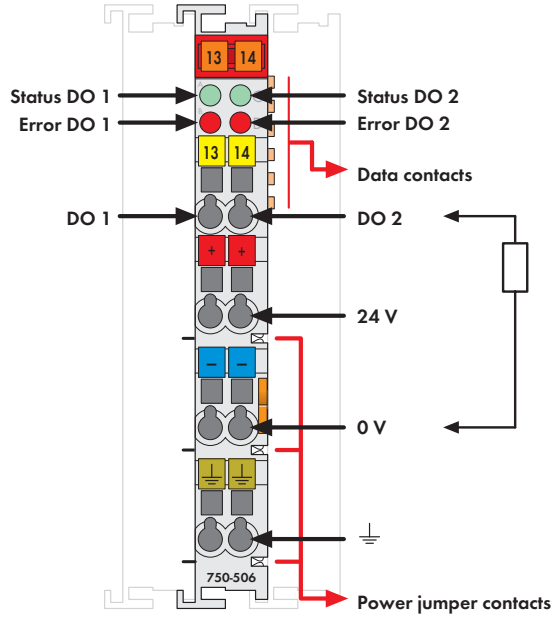

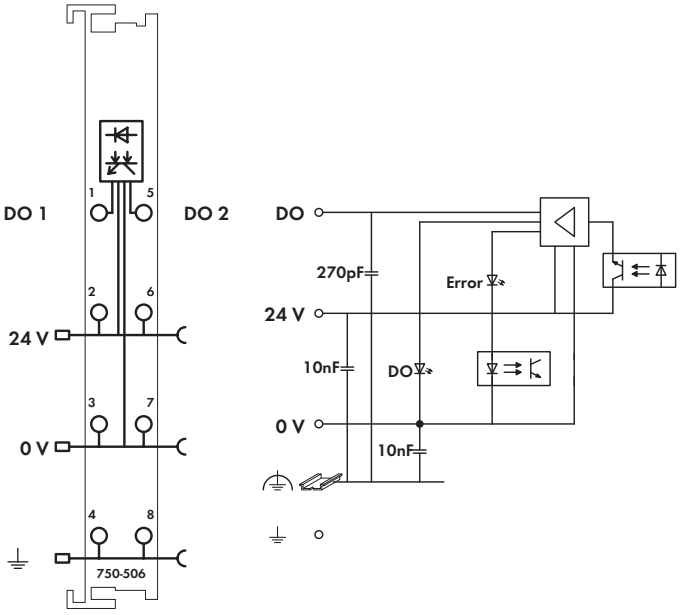

Fig. 750 Series
Delivered without miniature WSB markers

Control signals are transmitted from the automation device to connected actuators via the digital output module.

All outputs are short-circuit proof.

In addition to the functions that can be fulfilled by the standard output modules, these output modules can recognize a short circuit or an open circuit.
The status is transmitted to the fieldbus couplers and indicated by LEDs.

Field and system levels are electrically isolated.

Description	Item No.	Pack. Unit
2DO 24V DC 0.5A/ diagnostics	**750-506**	1
2DO 24V DC 0.5A/ diagnostics/R*	**750-506/000-800**	1
* /R: Interference-free for safety function applications (see manual)		
2DO 24V DC 0.5A/ diagnostics (without connector)	**753-506**	1

Accessories	Item No.	Pack. Unit
753 Series Connectors	**753-110**	25
Coding elements	**753-150**	100
Miniature WSB Quick marking system		
plain	**248-501**	5
with marking	see Section 11	

Approvals

Conformity marking	CE
Korea Certification	
UL 508	
ANSI/ISA 12.12.01	Class I, Div. 2, Grp. ABCD, T4
TÜV 07 ATEX 554086 X	I M2 Ex d I Mb, II 3 G Ex nA IIC T4 Gc, II 3 D Ex tc IIIC T135°C Dc
IECEx TUN 09.0001 X	Ex d I Mb, Ex nA IIC T4 Gc, Ex tc IIIC T135°C Dc

Technical Data

No. of outputs	2
Current consumption (internal)	15 mA
Voltage via power jumper contacts	24 V DC (-15 % ... +20 %)
Type of load	resistive, inductive, lamps
Max. switching frequency	5 kHz
Reverse voltage protection	no
Output current (max.)	0.5 A
Short-circuit limitation (typ.) Pwm	1.5 A
Open-circuit detection	< 9.5 mA
Diagnostics	Open circuit, overload and short-circuit
Inductive load switch off energy	
dissipation W (max.)	0.2 J; L max = 2 x W max / I^2
Current consumption typ. (field side)	15 mA / module + charge
Isolation	500 V system/supply
Internal bit width	4 bits in, 4 bits out
Wire connection	CAGE CLAMP®
Cross sections	0.08 mm² ... 2.5 mm² / AWG 28 ... 14
Strip lengths, 750/753 Series	8 ... 9 mm / 0.33 in
	9 ... 10 mm / 0.37 in
Width	12 mm
Weight	49.5 g
EMC immunity of interference	acc. to EN 61000-6-2
EMC emission of interference	acc. to EN 61000-6-4

2-Channel Digital Output Module 24 V DC

Short-circuit protected; high-side switching; with diagnostics

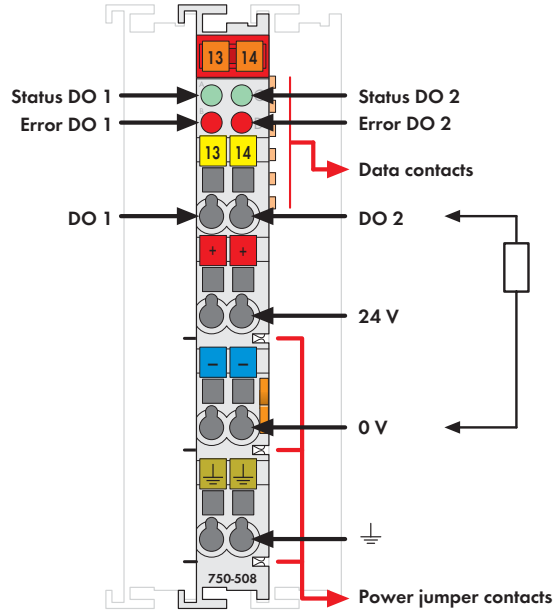

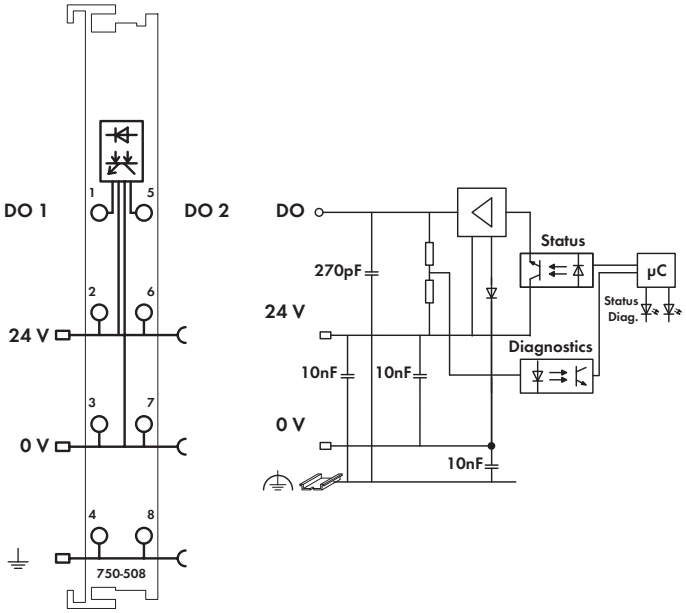

Fig. 750 Series
Delivered without miniature WSB markers

Control signals are transmitted from the automation device to connected actuators via the digital output module.

All outputs are short-circuit proof.

In addition to the functions that can be fulfilled by the standard output modules, these output modules can recognize a short circuit or an open circuit.
The status is transmitted to the fieldbus couplers and indicated by LEDs.

Field and system levels are electrically isolated.

Description	Item No.	Pack. Unit
2DO 24V DC 2.0A, diagnostics	**750-508**	10[1]
2DO 24V DC 2.0A/ diagnostics/R*	**750-508/000-800**	1
* /R: Interference-free for safety function applications (see manual)		
2DO 24V DC 2.0A/ diagnostics (without connector)	**753-508**	1

[1] Also available individually

Accessories		Item No.	Pack. Unit
	753 Series Connectors	**753-110**	25
	Coding elements	**753-150**	100
	Miniature WSB Quick marking system		
	plain	**248-501**	5
	with marking	see Section 11	

Approvals

Conformity marking	CE
Korea Certification	
Marine applications (versions upon request)	ABS, BV, DNV, GL, KR, LR, NKK, PRS, RINA
cULus UL 508	
cULus ANSI/ISA 12.12.01	Class I, Div. 2, Grp. ABCD, T4
TÜV 07 ATEX 554086 X	I M2 Ex d I Mb, II 3 G Ex nA IIC T4 Gc, II 3 D Ex tc IIIC T135°C Dc
IECEx TUN 09.0001 X	Ex d I Mb, Ex nA IIC T4 Gc, Ex tc IIIC T135°C Dc

Technical Data

No. of outputs	2
Current consumption (internal)	14 mA
Voltage via power jumper contacts	24 V DC (-25 % ... +30 %)
Type of load	resistive, inductive, lamps
Max. switching frequency	1 kHz
Reverse voltage protection	yes
Output current (max.)	2A
Short-circuit limitation (typ.) Pwm	15A / 2s
Open-circuit detection	< 0.2 mA
Diagnostics	Open circuit, overload and short-circuit
Current consumption typ. (field side)	7 mA / module + charge
Isolation	500 V system/supply
Internal bit width	2 bits in; 2 bits out
Wire connection	CAGE CLAMP®
Cross sections	0.08 mm² ... 2.5 mm² / AWG 28 ... 14
Strip lengths, 750/753 Series	8 ... 9 mm / 0.33 in
	9 ... 10 mm / 0.37 in
Width	12 mm
Weight	48.7 g
EMC immunity of interference	acc. to EN 61000-6-2, marine applications
EMC emission of interference	acc. to EN 61000-6-3, marine applications

4-Channel Digital Output Module 24 V DC

Short-circuit protected; high-side switching

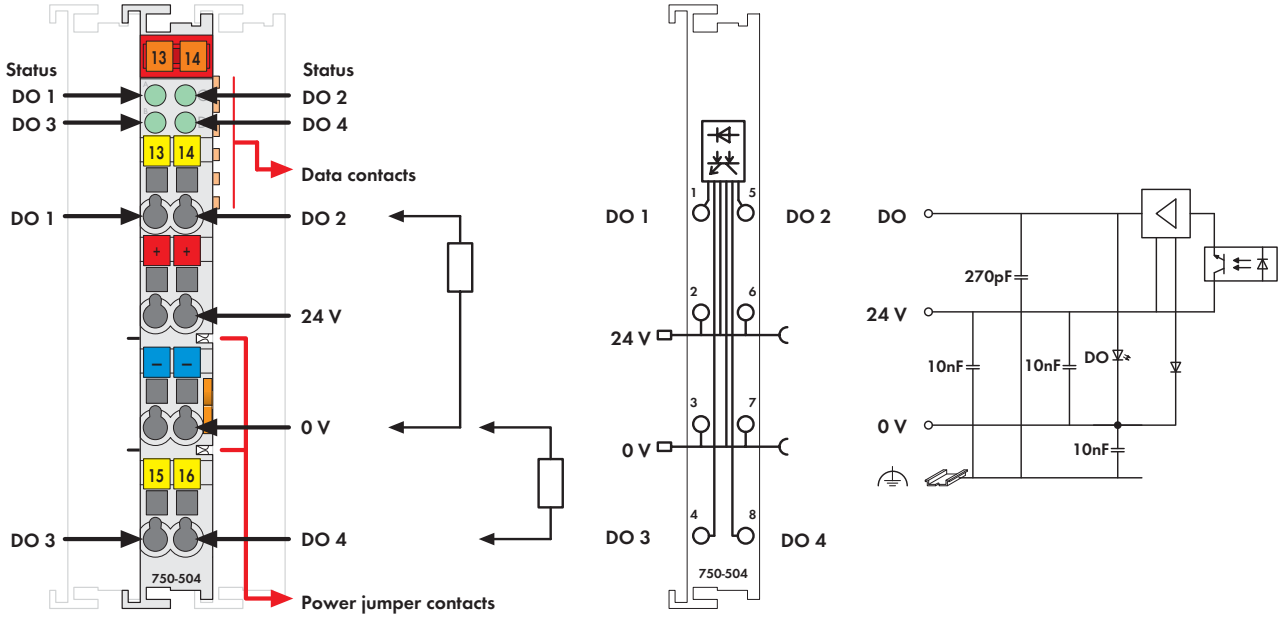

Fig. 750 Series
Delivered without miniature WSB markers

Control signals are transmitted from the automation device to connected actuators via the digital output module.

All outputs are short-circuit proof.

Field and system levels are electrically isolated.

Description	Item No.	Pack. Unit
4DO 24V DC 0.5A	**750-504**	1
4DO 24V DC 0.5A/R*	**750-504/000-800**	1
4DO 24V DC 0.5A/T	**750-504/025-000**	1
Extended temperature range: -20 °C ... +60 °C		
4DO 24V DC 0.5A/T/R*	**750-504/025-800**	1
Extended temperature range: -20 °C ... +60 °C		
4DO 24V DC 0.5A (without connector)	**753-504**	1
* /R: Interference-free for safety function applications (see manual)		

Accessories	Item No.	Pack. Unit
753 Series Connectors	**753-110**	25
Coding elements	**753-150**	100
Miniature WSB Quick marking system		
plain	**248-501**	5
with marking	see Section 11	

Approvals

Conformity marking	CE
Korea Certification	
Marine applications (versions upon request)	ABS, BV, DNV, GL, KR, LR, NKK, PRS, RINA
UL 508	
ANSI/ISA 12.12.01	Class I, Div. 2, Grp. ABCD, T4
TÜV 07 ATEX 554086 X	I M2 Ex d I Mb,
	II 3 G Ex nA IIC T4 Gc,
	II 3 D Ex tc IIIC T135°C Dc
IECEx TUN 09.0001 X	Ex d I Mb,
	Ex nA IIC T4 Gc,
	Ex tc IIIC T135°C Dc

Technical Data

No. of outputs	4
Current consumption (internal)	10 mA
Voltage via power jumper contacts	24 V DC (-25 % ... +30 %)
Type of load	resistive, inductive, lamps
Max. switching frequency	1 kHz
Output current (max.)	0.5 A, short-circuit protected
Inductive load switch off energy	
dissipation W (max.)	0.3 J; L max = 2 x W max / I^2
Current consumption typ. (field side)	15 mA / module + charge
Isolation	500 V system/supply
Internal bit width	4 bits
Wire connection	CAGE CLAMP®
Cross sections	0.08 mm² ... 2.5 mm² / AWG 28 ... 14
Strip lengths, 750/753 Series	8 ... 9 mm / 0.33 in
	9 ... 10 mm / 0.37 in
Width	12 mm
Weight	49.5 g
EMC immunity of interference	acc. to EN 61000-6-2, marine applications
EMC emission of interference	acc. to EN 61000-6-4, marine applications

4-Channel Digital Output Module 24 V DC

2-conductor connection; short-circuit-protected; high-side switching

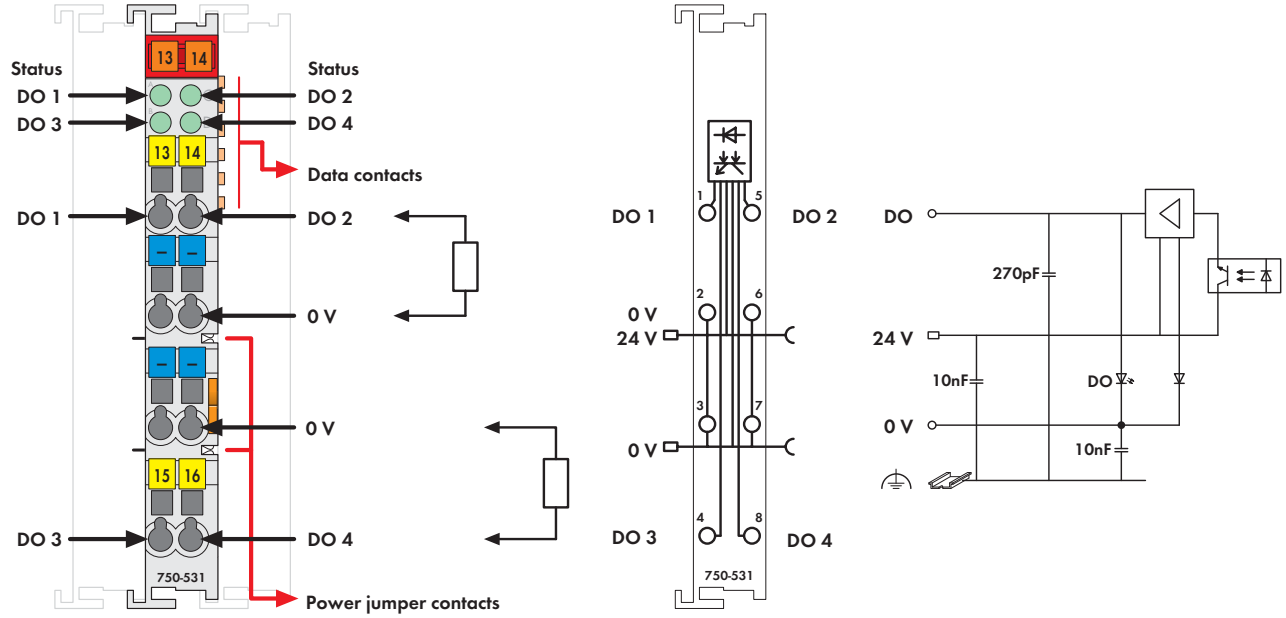

Fig. 750 Series
Delivered without miniature WSB markers

Control signals are transmitted from the automation device to connected actuators via the digital output module.

The module is a 4-output channel, 2-conductor device. Due to its four 0V connections, four actuators may be directly connected to it.

All outputs are short-circuit proof.

Field and system levels are electrically isolated.

Description	Item No.	Pack. Unit
4DO 24V DC 0.5A/ 2-conductor	**750-531**	1
4DO 24V DC 0.5A/ 2-conductor/R*	**750-531/000-800**	1
* /R: Interference-free for safety function applications (see manual)		
4DO 24V DC 0.5A/ 2-conductor (without connector)	**753-531**	1
4DO 24V DC 0.5A/ 2-conductor/R* (without connector)	**753-531/000-800**	1

Accessories	Item No.	Pack. Unit
753 Series Connectors	**753-110**	25
Coding elements	**753-150**	100
Miniature WSB Quick marking system		
plain	**248-501**	5
with marking	see Section 11	

Approvals

Conformity marking	CE
Korea Certification	
Marine applications (versions upon request)	ABS, BV, DNV, GL, KR, LR, NKK, PRS, RINA
UL 508	
ANSI/ISA 12.12.01	Class I, Div. 2, Grp. ABCD, T4
TÜV 07 ATEX 554086 X	I M2 Ex d I Mb, II 3 G Ex nA IIC T4 Gc, II 3 D Ex tc IIIC T135°C Dc
IECEx TUN 09.0001 X	Ex d I Mb, Ex nA IIC T4 Gc, Ex tc IIIC T135°C Dc

Technical Data

No. of outputs	4
Max. current consumption (internal)	10 mA
Voltage via power jumper contacts	24 V DC (-25 % ... +30 %)
Type of load	resistive, inductive, lamps
Max. switching frequency	1 kHz
Reverse voltage protection	yes
Output current (max.)	0.5 A short-circuit protected
Inductive load switch off energy dissipation W (max.)	0.3 J; L max = 2 x W max / I^2
Current consumption typ. (field side)	30 mA / module + charge
Isolation	500 V system/supply
Internal bit width	4 bits out
Wire connection	CAGE CLAMP®
Cross sections	0.08 mm² ... 2.5 mm² / AWG 28 ... 14
Strip lengths, 750/753 Series	8 ... 9 mm / 0.33 in 9 ... 10 mm / 0.37 in
Width	12 mm
Weight	48.5 g
EMC immunity of interference	acc. to EN 61000-6-2, marine applications
EMC emission of interference	acc. to EN 61000-6-4, marine applications

4-Channel Digital Output Module 24 V DC

Short-circuit protected; low-side switching

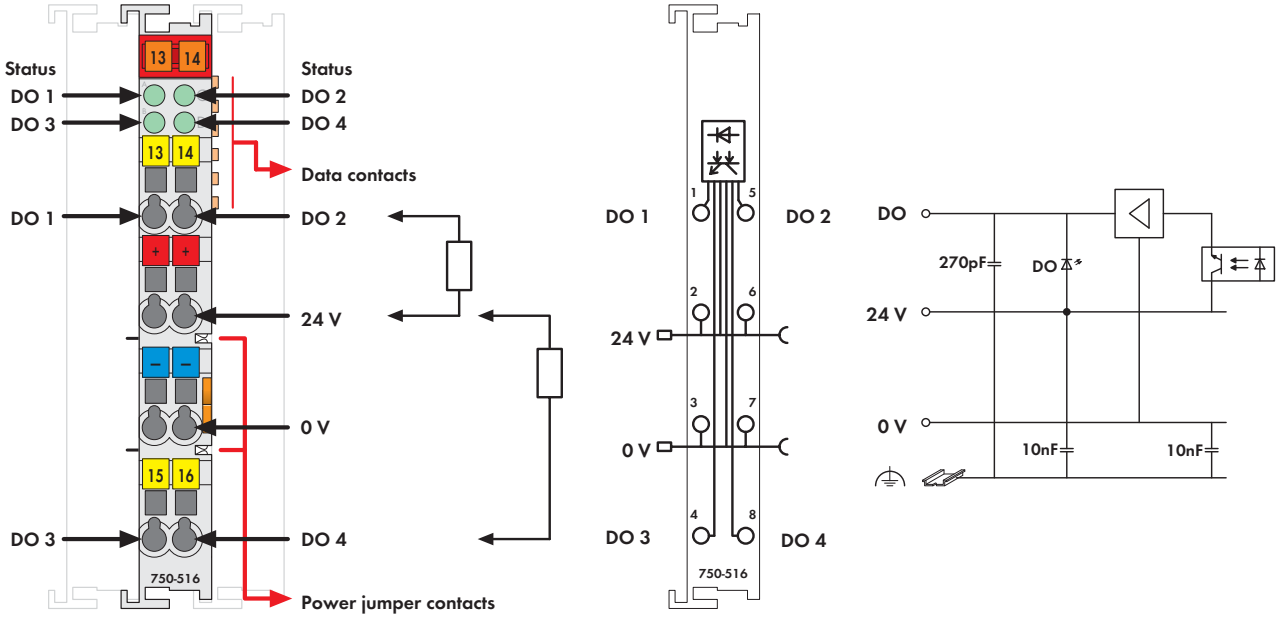

Fig. 750 Series
Delivered without miniature WSB markers

Control signals are transmitted from the automation device to connected actuators via the digital output module.

All outputs are short-circuit proof.

Field and system levels are electrically isolated.

Description	Item No.	Pack. Unit
4DO 24V DC 0.5A/ low-side switching	**750-516**	1
4DO 24V DC 0.5A/ low-side switching (without connector)	**753-516**	1

Accessories	Item No.	Pack. Unit
753 Series Connectors	**753-110**	25
Coding elements	**753-150**	100
Miniature WSB Quick marking system		
plain	**248-501**	5
with marking	see Section 11	

Approvals

Conformity marking	CE
Korea Certification	
Marine applications	ABS, BV, DNV, GL, KR, LR, NKK, PRS, RINA
UL 508	
ANSI/ISA 12.12.01	Class I, Div. 2, Grp. ABCD, T4
TÜV 12.1297 X (Brazil)	Ex nA IIC T4 Gc (750-516)
TÜV 07 ATEX 554086 X	I M2 Ex d I Mb, II 3 G Ex nA IIC T4 Gc, II 3 D Ex tc IIIC T135°C Dc
IECEx TUN 09.0001 X	Ex d I Mb, Ex nA IIC T4 Gc, Ex tc IIIC T135°C Dc

Technical Data

No. of outputs	4
Current consumption (internal)	7 mA
Voltage via power jumper contacts	24 V DC (-25 % ... +30 %)
Type of load	resistive, inductive, lamps
Max. switching frequency	5 kHz
Output current (max.)	0.5 A short-circuit protected
Inductive load switch off energy dissipation W (max.)	0.55 J; L max = 2 x W max / I^2
Current consumption typ. (field side)	30 mA / module + charge
Isolation	500 V system/supply
Internal bit width	4 bits
Wire connection	CAGE CLAMP®
Cross sections	0.08 mm² ... 2.5 mm² / AWG 28 ... 14
Strip lengths, 750/753 Series	8 ... 9 mm / 0.33 in 9 ... 10 mm / 0.37 in
Width	12 mm
Weight	49.5 g
EMC immunity of interference	acc. to EN 61000-6-2, marine applications
EMC emission of interference	acc. to EN 61000-6-4, marine applications

4-Channel Digital Output Module 24 V DC

Short-circuit protected; high-side switching; with diagnostics

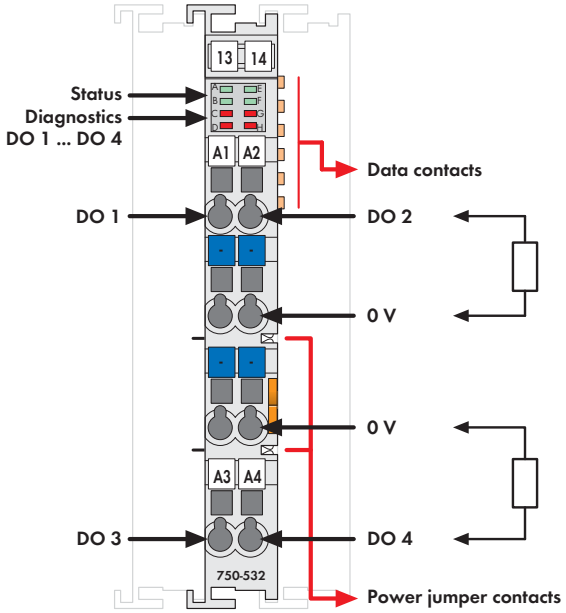

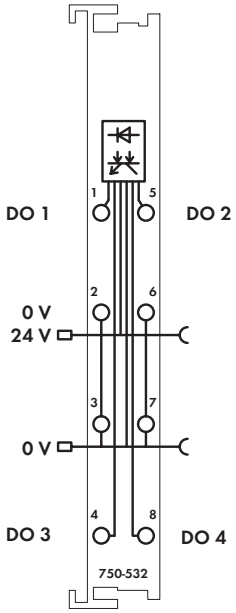

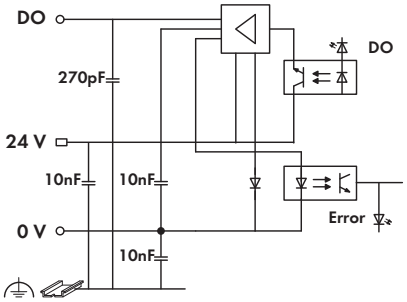

Delivered without miniature WSB markers

Control signals are transmitted from the automation device to connected actuators via the digital output module.

All outputs are short-circuit proof.

In addition to the functions that can be fulfilled by the standard output modules, these output modules can recognize a short circuit or an open circuit.
The status is transmitted to the fieldbus couplers and indicated by LEDs.

Field and system levels are electrically isolated.

Description	Item No.	Pack. Unit
4DO 24V DC 0.5A, diagnostics	**750-532**	1

Accessories		Item No.	Pack. Unit
Miniature WSB Quick marking system			
	plain	**248-501**	5
	with marking	see Section 11	

Approvals

Conformity marking	CE
Korea Certification	
Marine applications	ABS, BV, DNV, GL, KR, LR, NKK, PRS, RINA
cULus UL 508	
cULus ANSI/ISA 12.12.01	Class I, Div. 2, Grp. ABCD, T4
TÜV 07 ATEX 554086 X	I M2 Ex d I Mb, II 3 G Ex nA IIC T4 Gc, II 3 D Ex tc IIIC T135°C Dc
IECEx TUN 09.0001 X	Ex d I Mb, Ex nA IIC T4 Gc, Ex tc IIIC T135°C Dc

Technical Data

No. of outputs	4
Max. current consumption (internal)	10 mA
Voltage via power jumper contacts	24 VDC (-25 % ... +30 %)
Type of load	resistive, inductive, lamps
Max. switching frequency	2 kHz
Reverse voltage protection	yes
Output current	0.5 A, short-circuit protected
Short-circuit limitation (typ.) Pwm	6A
Open-circuit detection	< 0.9 mA
Diagnostics	Open-circuit, overload and short-circuit
Inductive load switch off energy dissipation W (max.)	0.125 J; L max = 2 x W max / I^2
Current consumption typ. (field side)	13 mA / module + load
Isolation	500 V system/supply
Internal bit width	4 bits out, 4 bits in (diagnostics)
Wire connection	CAGE CLAMP®
Cross sections	0.08 mm² ... 2.5 mm² / AWG 28 ... 14
Strip lengths	8 ... 9 mm / 0.33 in
Width	12 mm
Weight	48.9 g
EMC immunity of interference	acc. to EN 61000-6-2, marine applications
EMC emission of interference	acc. to EN 61000-6-3, marine applications

8-Channel Digital Output Module 24 V DC

Short-circuit protected; high-side switching

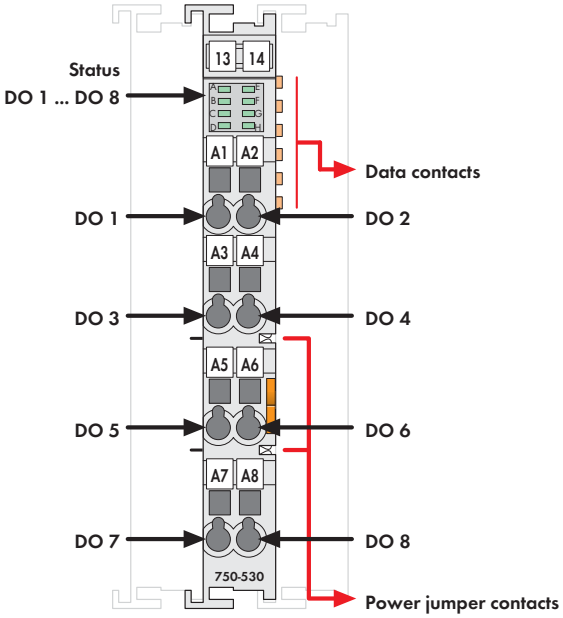

Fig. 750 Series
Delivered without miniature WSB markers

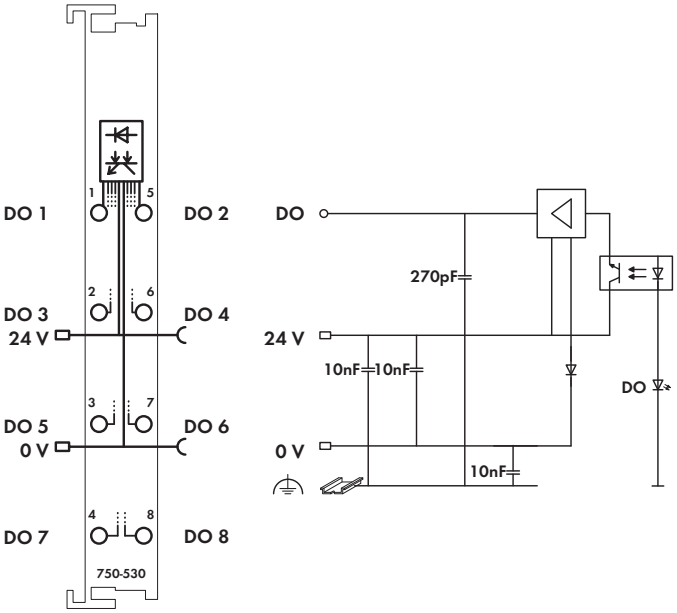

NOTE: Connection point marking (i.e., 1 ... 8) does not refer to channel assignment

The digital output module provides 8 channels at a width of just 12mm (0.47in.).
The connected load is switched via digital output from the control system.

All outputs are short-circuit proof.

Field and system levels are electrically isolated.

Description	Item No.	Pack. Unit
8DO 24V DC 0.5A	**750-530**	1
8DO 24V DC 0.5A/T	**750-530/025-000**	1
Extended temperature range: -20 °C ... +60 °C		
8DO 24V DC 0.5A (without connector)	**753-530**	1

Accessories		Item No.	Pack. Unit
	753 Series Connectors	**753-110**	25
	Coding elements	**753-150**	100
	Miniature WSB Quick marking system		
	plain	**248-501**	5
	with marking	see Section 11	

Approvals

Conformity marking	CE
Korea Certification	
Marine applications (versions upon request)	ABS, BV, DNV, GL, KR, LR, NKK, PRS, RINA
cULus UL 508	
cULus ANSI/ISA 12.12.01	Class I, Div. 2, Grp. ABCD, T4
TÜV 12.1297 X (Brazil)	Ex nA IIC T4 Gc (750-530)
TÜV 07 ATEX 554086 X	I M2 Ex d I Mb, II 3 G Ex nA IIC T4 Gc, II 3 D Ex tc IIIC T135°C Dc
IECEx TUN 09.0001 X	Ex d I Mb, Ex nA IIC T4 Gc, Ex tc IIIC T135°C Dc

Technical Data

No. of outputs	8
Current consumption (internal)	25 mA
Voltage via power jumper contacts	24 V DC (-25 % ... +30 %)
Type of load	resistive, inductive, lamps
Max. switching frequency	2 kHz
Output current (max.)	0.5 A, short-circuit protected
Inductive load switch off energy dissipation W (max.)	0.9 J; L max = 2 x W max / I^2
Current consumption typ. (field side)	15 mA + charge
Isolation	500 V system/supply
Internal bit width	8 bits
Wire connection	CAGE CLAMP®
Cross sections	0.08 mm² ... 2.5 mm² / AWG 28 ... 14
Strip lengths, 750/753 Series	8 ... 9 mm / 0.33 in 9 ... 10 mm / 0.37 in
Width	12 mm
Weight	50.7 g
EMC immunity of interference	acc. to EN 61000-6-2, marine applications
EMC emission of interference	acc. to EN 61000-6-4, marine applications

8-Channel Digital Output Module 24 V DC

Short-circuit protected; low-side switching

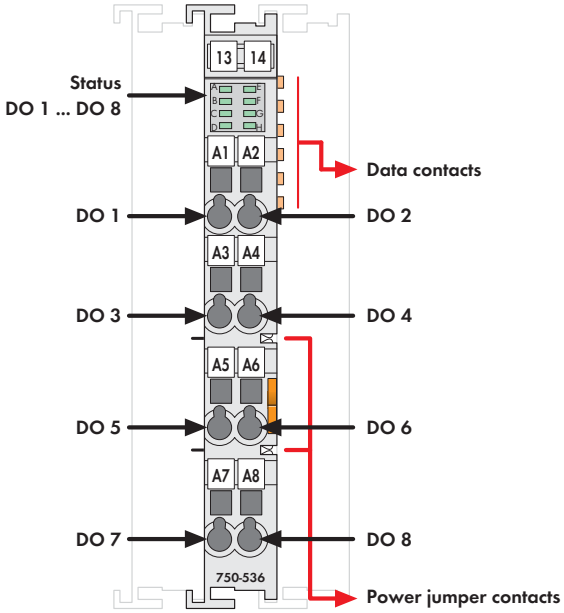

Delivered without miniature WSB markers

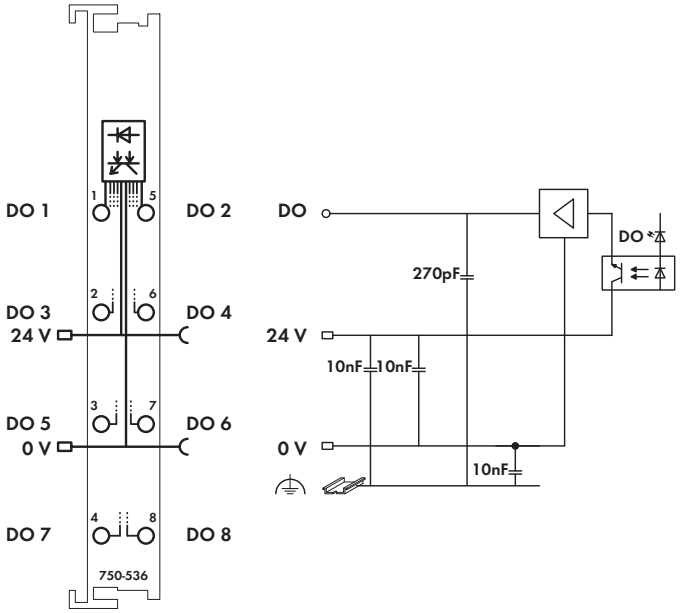

NOTE: Connection point marking (i.e., 1 ... 8) does not refer to channel assignment

The digital output module provides 8 channels at a width of just 12mm (0.47in.).
The connected load is switched via digital output from the control system.

All outputs are short-circuit proof.

Field and system levels are electrically isolated.

Description	Item No.	Pack. Unit
8DO 24V DC 0.5A	**750-536**	1
8DO 24V DC 0.5A (without connector)	**753-536**	1

Accessories		Item No.	Pack. Unit
	753 Series Connectors	**753-110**	25
	Coding elements	**753-150**	100
	Miniature WSB Quick marking system		
	plain	**248-501**	5
	with marking	see Section 11	

Approvals

Conformity marking	CE
Korea Certification	
Marine applications	ABS, BV, DNV, GL, KR, LR, NKK, PRS, RINA
cULus UL 508	
cULus ANSI/ISA 12.12.01	Class I, Div. 2, Grp. ABCD, T4
TÜV 07 ATEX 554086 X	I M2 Ex d I Mb, II 3 G Ex nA IIC T4 Gc, II 3 D Ex tc IIIC T135°C Dc
IECEx TUN 09.0001 X	Ex d I Mb, Ex nA IIC T4 Gc, Ex tc IIIC T135°C Dc

Technical Data

No. of outputs	8
Max. current consumption (internal)	25 mA
Voltage via power jumper contacts	24 V DC (-25 % ... +30 %)
Type of load	resistive, inductive, lamps
Max. switching frequency	2 kHz
Output current	0.5 A, short-circuit protected
Reverse voltage protection	yes
Inductive load switch off energy dissipation W (max.)	0.5 J; L max = 2 x W max / I^2
Current consumption typ. (field side)	12 mA / module + load
Isolation	500 V system/supply
Internal bit width	8 bit out
Wire connection	CAGE CLAMP®
Cross sections	0.08 mm² ... 2.5 mm² / AWG 28 ... 14
Strip lengths, 750/753 Series	8 ... 9 mm / 0.33 in 9 ... 10 mm / 0.37 in
Width	12 mm
Weight	49.6 g
EMC immunity of interference	acc. to EN 61000-6-2, marine applications
EMC emission of interference	acc. to EN 61000-6-3, marine applications

8-Channel Digital Output Module 24 V DC

Short-circuit protected; high-side switching; with diagnostics

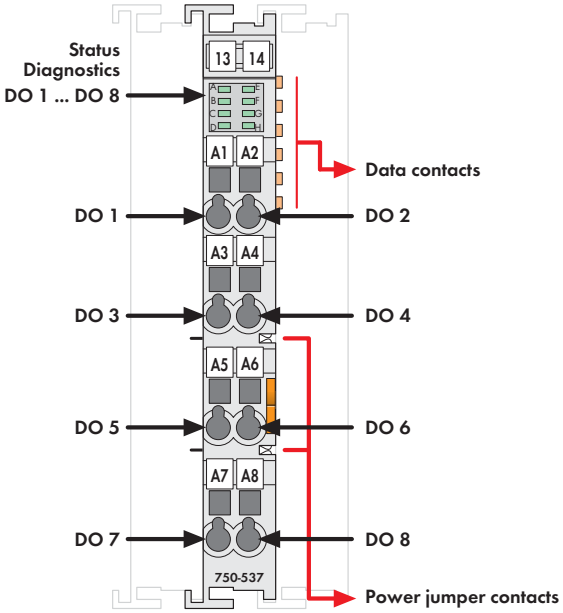

Delivered without miniature WSB markers

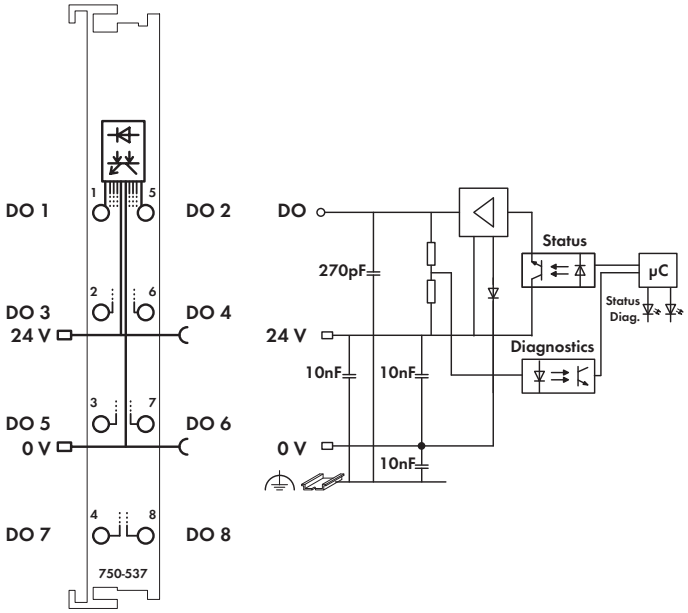

NOTE: Connection point marking (i.e., 1 ... 8) does not refer to channel assignment

Control signals are transmitted from the automation device to connected actuators via the digital output module.

All outputs are short-circuit proof.

In addition to the functions that can be fulfilled by the standard output modules, these output modules can recognize a short circuit or an open circuit.
The status is transmitted to the fieldbus couplers and indicated by LEDs.

The module is an 8-channel device and eight actuators may be connected to it.

Field and system levels are electrically isolated.

Description	Item No.	Pack. Unit
8DO 24V DC 0.5A, diagnostics	**750-537**	1
8DO 24V DC 0.5A, diagnostics (without connector)	**753-537**	1

Accessories		Item No.	Pack. Unit
	753 Series Connectors	**753-110**	25
	Coding elements	**753-150**	100
	Miniature WSB Quick marking system		
	plain	**248-501**	5
	with marking	see Section 11	

Approvals

Conformity marking	CE
Korea Certification	
Marine applications	ABS, BV[1], DNV, GL, KR, LR[1], NKK, PRS, RINA
UL 508	
ANSI/ISA 12.12.01	Class I, Div. 2, Grp. ABCD, T4
TÜV 07 ATEX 554086 X	I M2 Ex d I Mb, II 3 G Ex nA IIC T4 Gc, II 3 D Ex tc IIIC T135°C Dc
IECEx TUN 09.0001 X	Ex d I Mb, Ex nA IIC T4 Gc, Ex tc IIIC T135°C Dc

[1] Does not apply to 753-537

Technical Data

No. of outputs	8
Max. current consumption (internal)	50 mA
Voltage via power jumper contacts	24 V DC (-25 % ... +30 %)
Type of load	resistive, inductive, lamps
Max. switching frequency	1 kHz
Reverse voltage protection	yes
Output current	0.5 A, short-circuit protected
Short-circuit limitation (typ.) Pwm	12 A
Open-circuit detection	< 0.1 mA
Diagnostics	Open-circuit, overload and short-circuit
Inductive load switch off energy dissipation W (max.)	0.1 J; L max = 2 x W max / I^2
Current consumption typ. (field side)	16 mA / module + load
Isolation	500 V system/supply
Internal bit width	8 bits out, 8 bits in (diagnostics)
Wire connection	CAGE CLAMP®
Cross sections	0.08 mm² ... 2.5 mm² / AWG 28 ... 14
Strip lengths, 750/753 Series	8 ... 9 mm / 0.33 in 9 ... 10 mm / 0.37 in
Width	12 mm
Weight	51.9 g
EMC immunity of interference	acc. to EN 61000-6-2, marine applications
EMC emission of interference	acc. to EN 61000-6-3, marine applications

8-Channel Digital Input/Output Module 24 V DC

Ribbon cable, high-side switching

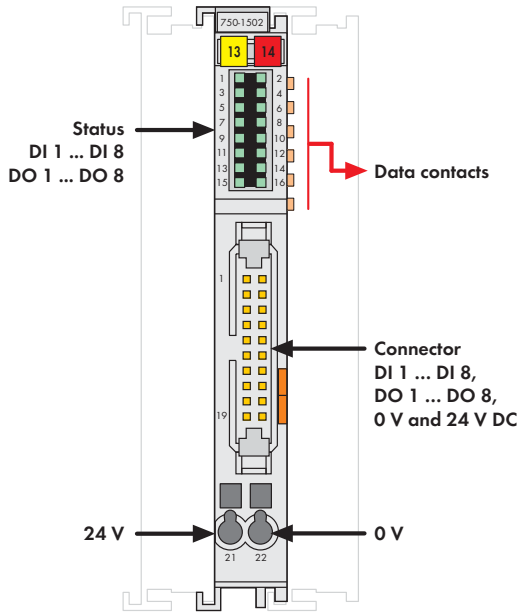

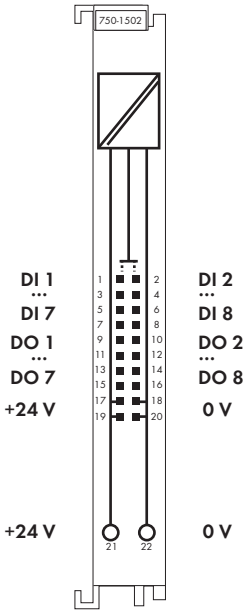

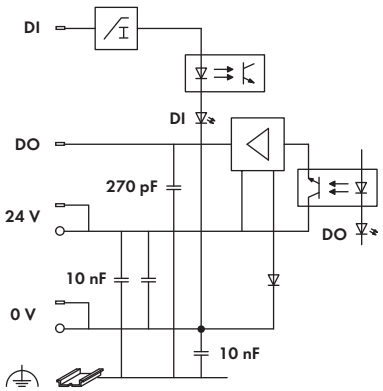

Delivered without miniature WSB markers

The digital input/output module provides 8 inputs and 8 outputs at a width of just 12mm (0.47in.).

It receives binary control signals from digital field devices and transmits them to the connected actuators (e.g., magnetic valves, contactors, transmitters, relays or other electrical loads).

The module connects electronic modules via a 20-pole flat cable.

The 24V power is fed to the electronic modules via two CAGE CLAMP® terminals.

A green LED indicates the switched status of each channel.

An optocoupler provides electrical isolation between the bus and the field side.

Description	Item No.	Pack. Unit
8DI 8DO 24V DC 0.5A, ribbon cable	**750-1502**	1
Interference-free for use in safety functions (see manual)		

Accessories		Item No.	Pack. Unit
Miniature WSB Quick marking system			
	plain	**248-501**	5
	with marking	see Section 11	
Cable and interface modules		see Section 11	

Approvals

Conformity marking	CE
Korea Certification	
Marine applications	ABS, BV, DNV, GL, KR, LR, NKK, PRS, RINA
cULus UL 508	
cULus ANSI/ISA 12.12.01	Class I, Div. 2, Grp. ABCD, T4
TÜV 07 ATEX 554086 X	I M2 Ex d I Mb, II 3 G Ex nA IIC T4 Gc, II 3 D Ex tc IIIC T135°C Dc
IECEx TUN 09.0001 X	Ex d I Mb, Ex nA IIC T4 Gc, Ex tc IIIC T135°C Dc

Technical Data

Digital inputs:	
Number of inputs	8
Signal voltage (0)	-3 V ... +5 V DC
Signal voltage (1)	15 V ... 30 V DC
Input filter	3.0 ms
Input current (typ.)	+0.6 mA (at -3 V ... +5 V DC)
	+2.2 mA ... +2.5 mA (at 15 V ... +32 V DC)
Digital outputs:	
No. of outputs	8
Type of load	resistive, inductive, lamps
Max. switching frequency	1kHz
Output current (max.)	0.5 A, short-circuit protected
Current consumption typ. (field side)	16mA
General Specifications	
Voltage supply	24 V DC (-25 % ... +30 %)
Current consumption (internal)	30 mA
Isolation	500 V system/field
Wire connection	20-pin male connector / CAGE CLAMP®
Cross sections CAGE CLAMP®	0.08 mm² ... 2.5 mm² / AWG 28 ... 16
Strip lengths	8 ... 9 mm / 0.33 in
Dimensions (mm) W x H x L	12 x 73 x 100
	Height from upper-edge of DIN 35 rail
Weight	44 g
EMC immunity of interference	acc. to EN 61000-6-2, marine applications
EMC emission of interference	acc. to EN 61000-6-3, marine applications

8-Channel Digital Input/Output Module 24 V DC

High-side switching

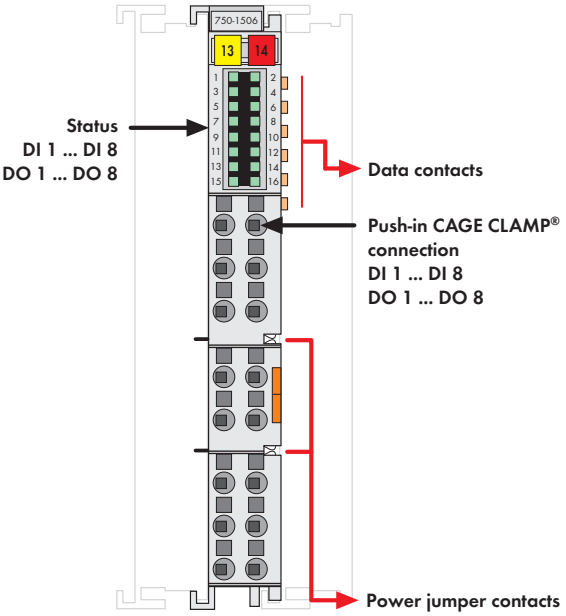

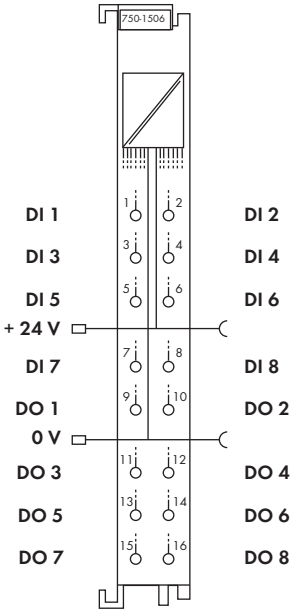

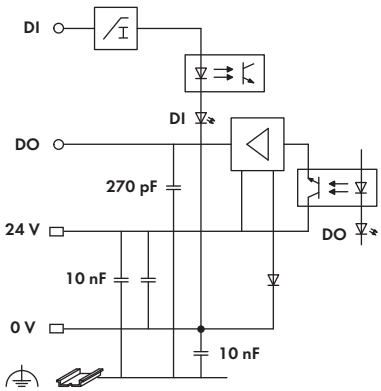

Delivered without miniature WSB markers

The digital input/output module provides 8 inputs and 8 outputs at a width of just 12mm (0.47in.).

It receives binary control signals from digital field devices and transmits them to the connected actuators (e.g., magnetic valves, contactors, transmitters, relays or other electrical loads).

The module has Push-in CAGE CLAMP® connections enabling solid conductors to be inserted directly.

A green LED indicates the switched status of each channel.

An optocoupler provides electrical isolation between the bus and the field side.

Description	Item No.	Pack. Unit
8DI 8DO 24V DC 0.5A	**750-1506**	1
Interference-free for use in safety functions (see manual)		

Accessories		Item No.	Pack. Unit
Miniature WSB Quick marking system			
	plain	**248-501**	5
	with marking	see Section 11	
Operating tool, with partially insulated shaft, type 1, blade (2.5 x 0.4) mm		**210-719**	50

Approvals

Conformity marking	CE
Korea Certification	
Marine applications	ABS, BV, DNV, GL, KR, LR, NKK, PRS, RINA
UL 508	
ANSI/ISA 12.12.01	Class I, Div. 2, Grp. ABCD, T4
TÜV 07 ATEX 554086 X	I M2 Ex d I Mb,
	II 3 G Ex nA IIC T4 Gc,
	II 3 D Ex tc IIIC T135°C Dc
IECEx TUN 09.0001 X	Ex d I Mb,
	Ex nA IIC T4 Gc,
	Ex tc IIIC T135°C Dc

Technical Data

Digital inputs:	
Number of inputs	8
Signal voltage (0)	-3 V ... +5 V DC
Signal voltage (1)	15 V ... 30 V DC
Input filter	3.0 ms
Input current (typ.)	+0.6 mA (at -3 V ... +5 V DC)
	+2.2 mA ... +2.5 mA (at 15 V ... +32 V DC)
Digital outputs:	
No. of outputs	8
Type of load	resistive, inductive, lamps
Max. switching frequency	1kHz
Output current (max.)	0.5 A, short-circuit protected
Current consumption typ. (field side)	16mA
General Specifications	
Current consumption (internal)	30 mA
Isolation	500 V system/field
Wire connection	Push-in CAGE CLAMP®
Cross sections	solid:
	0.08 mm² ... 1.5 mm² / AWG 28 ... 16
	fine-stranded:
	0.25 mm² ... 1.5 mm² / AWG 22 ... 16
Strip lengths	8 ... 9 mm / 0.33 in
Width	12 mm
Weight	60 g
EMC immunity of interference	acc. to EN 61000-6-2, marine applications
EMC emission of interference	acc. to EN 61000-6-3, marine applications

8-Channel Digital Output Module 24 V DC

High-side switching, 2-conductor connection

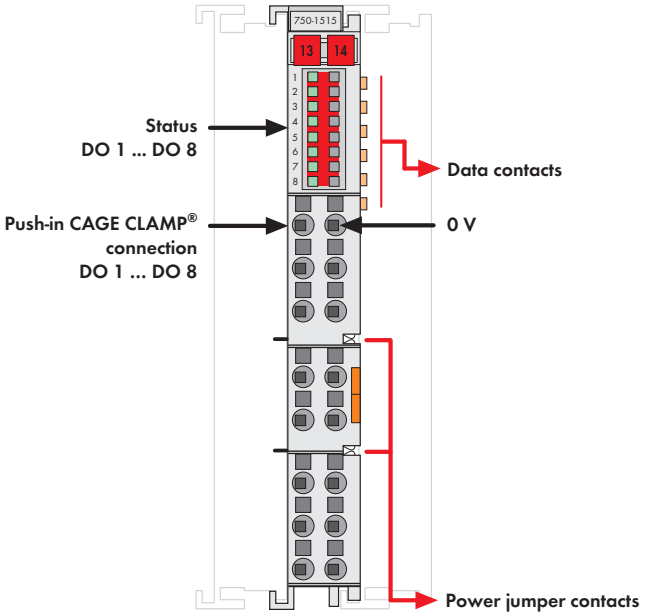

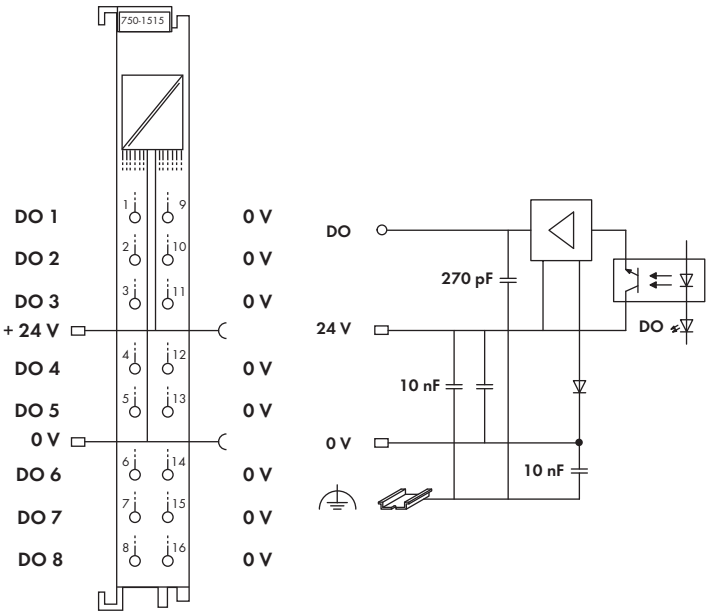

The 2-conductor digital output module provides 8 channels at a width of just 12mm (0.47in.).

It transmits binary control signals from the automation device to connected actuators (e.g., magnetic valves, contactors, transmitters, relays or other electrical loads).

The module has Push-in CAGE CLAMP® connections enabling solid conductors to be inserted directly.
A green LED indicates the switched status of each channel.

An optocoupler provides electrical isolation between the bus and the field side.

An operating tool with a 2.5mm blade (210-719) is required to open the Push-in CAGE CLAMP® connections.

Description	Item No.	Pack. Unit
8DO 24V DC 0.5A, 2-conductor	**750-1515**	1
Interference-free for use in safety functions (see manual)		

Accessories		Item No.	Pack. Unit
Miniature WSB Quick marking system			
	plain	**248-501**	5
	with marking	see Section 11	
Operating tool, with partially insulated shaft, type 1, blade (2.5 x 0.4) mm		**210-719**	50

Approvals

Conformity marking	CE
Korea Certification	
Marine applications	ABS, BV, DNV, GL, KR, LR, NKK, PRS, RINA
cULus UL 508	
cULus ANSI/ISA 12.12.01	Class I, Div. 2, Grp. ABCD, T4
TÜV 07 ATEX 554086 X	I M2 Ex d I Mb, II 3 G Ex nA IIC T4 Gc, II 3 D Ex tc IIIC T135°C Dc
IECEx TUN 09.0001 X	Ex d I Mb, Ex nA IIC T4 Gc, Ex tc IIIC T135°C Dc

Technical Data

No. of outputs	8
Max. current consumption (internal)	20 mA
Voltage via power jumper contacts	24 V DC (-25 % ... +30 %)
Type of load	resistive, inductive, lamps
Max. switching frequency	1 kHz
Output current (max.)	0.5 A, short-circuit protected
Current consumption typ. (field side)	15 mA
Isolation	500 V system/field
Wire connection	Push-in CAGE CLAMP®
Cross sections	solid:
	0.08 mm² ... 1.5 mm² / AWG 28 ... 16
	fine-stranded:
	0.25 mm² ... 1.5 mm² / AWG 22 ... 16
Strip lengths	8 ... 9 mm / 0.33 in
Width	12 mm
Weight	48 g
EMC immunity of interference	acc. to EN 61000-6-2, marine applications
EMC emission of interference	acc. to EN 61000-6-3, marine applications

8-Channel Digital Output Module 24 V DC

Low-side switching, 2-conductor connection

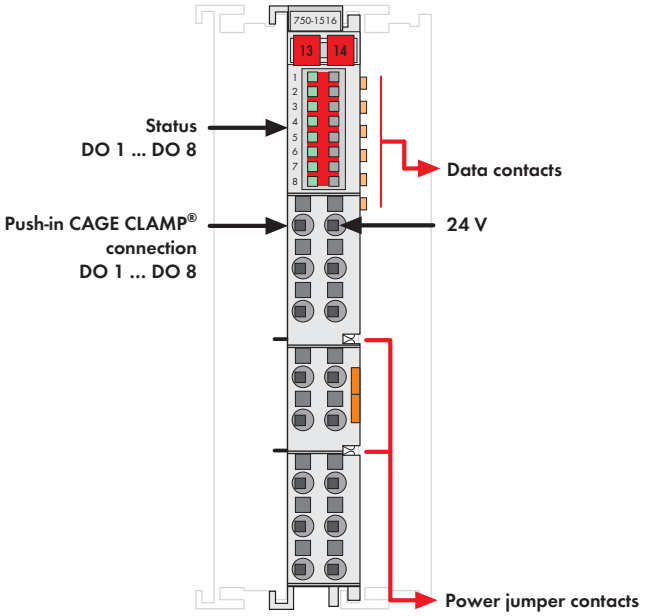

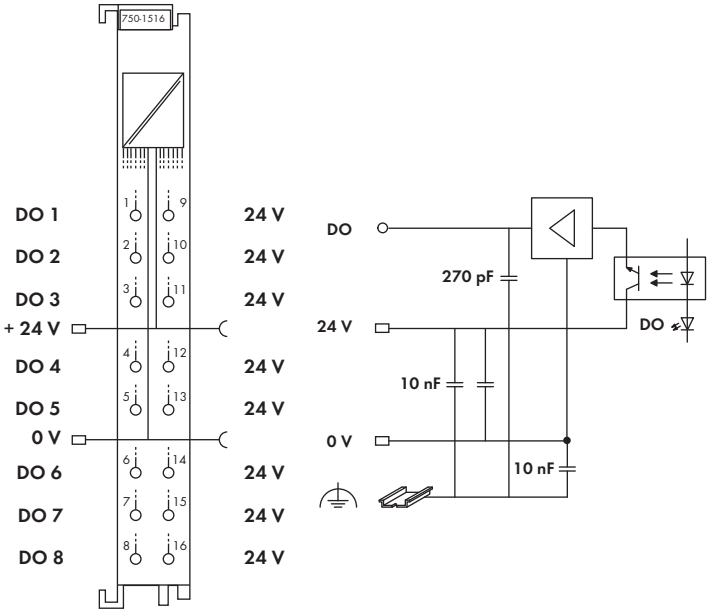

The 2-conductor digital output module provides 8 channels at a width of just 12mm (0.47in.).

It transmits binary control signals from the automation device to connected actuators (e.g., magnetic valves, contactors, transmitters, relays or other electrical loads).

The module has Push-in CAGE CLAMP® connections enabling solid conductors to be inserted directly.

A green LED indicates the switched status of each channel.

An optocoupler provides electrical isolation between the bus and the field side.

An operating tool with a 2.5mm blade (210-719) is required to open the Push-in CAGE CLAMP® connections.

Description	Item No.	Pack. Unit
8DO 24V DC 0.5A, low-side switching, 2-conductor	**750-1516**	1
Interference-free for use in safety functions (see manual)		

Accessories		Item No.	Pack. Unit
Miniature WSB Quick marking system			
	plain	**248-501**	5
	with marking	see Section 11	
Operating tool, with partially insulated shaft, type 1, blade (2.5 x 0.4) mm		**210-719**	50

Approvals

Conformity marking	CE
Korea Certification	
Marine applications	ABS, BV, DNV, GL, KR, LR, NKK, PRS, RINA
UL 508	
ANSI/ISA 12.12.01	Class I, Div. 2, Grp. ABCD, T4
TÜV 07 ATEX 554086 X	I M2 Ex d I Mb, II 3 G Ex nA IIC T4 Gc, II 3 D Ex tc IIIC T135°C Dc
IECEx TUN 09.0001 X	Ex d I Mb, Ex nA IIC T4 Gc, Ex tc IIIC T135°C Dc

Technical Data

No. of outputs	8
Max. current consumption (internal)	20 mA
Voltage via power jumper contacts	24 V DC (-25 % ... +30 %)
Type of load	resistive, inductive, lamps
Max. switching frequency	1 kHz
Output current (max.)	0.5 A, short-circuit protected
Current consumption typ. (field side)	8 mA
Isolation	500 V system/field
Wire connection	Push-in CAGE CLAMP®
Cross sections	solid:
	0.08 mm² ... 1.5 mm² / AWG 28 ... 16
	fine-stranded:
	0.25 mm² ... 1.5 mm² / AWG 22 ... 16
Strip lengths	8 ... 9 mm / 0.33 in
Width	12 mm
Weight	48 g
EMC immunity of interference	acc. to EN 61000-6-2, marine applications
EMC emission of interference	acc. to EN 61000-6-3, marine applications

16-Channel Digital Output Module 24 V DC

Ribbon cable, high-side switching

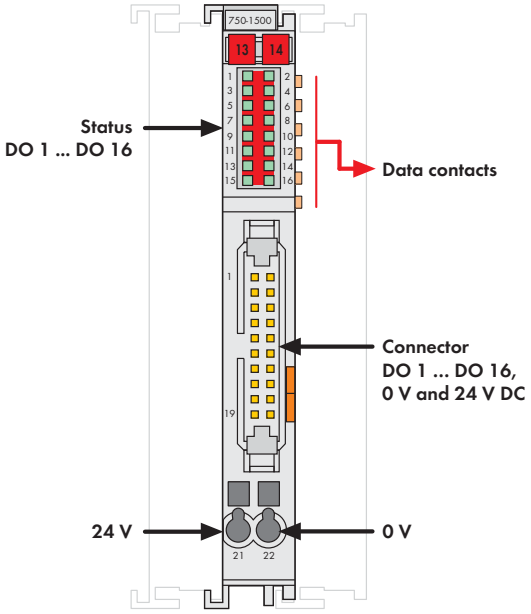

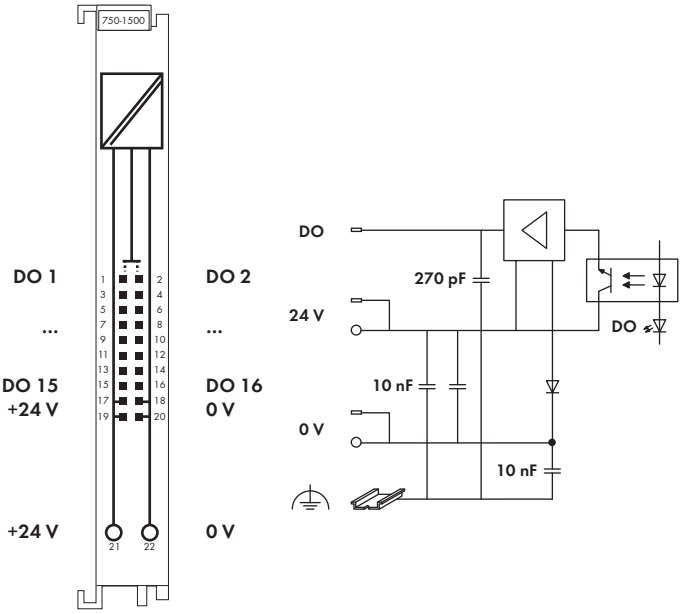

Delivered without miniature WSB markers

The digital output module provides 16 channels at a width of just 12mm (0.47in.).

It transmits binary control signals from the automation device to connected actuators (e.g., magnetic valves, contactors, transmitters, relays or other electrical loads).

The module connects electronic modules via a 20-pole flat cable.

The 24V power is fed to the electronic modules via two CAGE CLAMP® terminals.

A green LED indicates the switched status of each channel.

An optocoupler provides electrical isolation between the bus and the field side.

Description	Item No.	Pack. Unit
16DO 24V DC 0.5A, ribbon cable	**750-1500**	1
Interference-free for use in safety functions (see manual)		

Accessories		Item No.	Pack. Unit
Miniature WSB Quick marking system			
	plain	**248-501**	5
	with marking	see Section 11	
Cable and interface modules		see Section 11	

Approvals

Conformity marking	CE
Korea Certification	
Marine applications	ABS, BV, DNV, GL, KR, LR, NKK, PRS, RINA
cULus UL 508	
cULus ANSI/ISA 12.12.01	Class I, Div. 2, Grp. ABCD, T4
TÜV 07 ATEX 554086 X	I M2 Ex d I Mb, II 3 G Ex nA IIC T4 Gc, II 3 D Ex tc IIIC T135°C Dc
IECEx TUN 09.0001 X	Ex d I Mb, Ex nA IIC T4 Gc, Ex tc IIIC T135°C Dc

Technical Data

No. of outputs	16
Max. current consumption (internal)	40 mA
Voltage supply	24 V DC (-25 % ... +30 %)
Type of load	resistive, inductive, lamps
Max. switching frequency	1 kHz
Output current (max.)	0.5 A, short-circuit protected
Current consumption typ. (field side)	29 mA
Isolation	500 V system/field
Wire connection	20-pin male connector / CAGE CLAMP®
Cross sections CAGE CLAMP®	0.08 mm² ... 2.5 mm² / AWG 28 ... 16
Strip lengths	8 ... 9 mm / 0.33 in
Dimensions (mm) W x H x L	12 x 73 x 100
	Height from upper-edge of DIN 35 rail
Weight	46.1 g
EMC immunity of interference	acc. to EN 61000-6-2, marine applications
EMC emission of interference	acc. to EN 61000-6-3, marine applications

16-Channel Digital Output Module 24 V DC

High-side switching

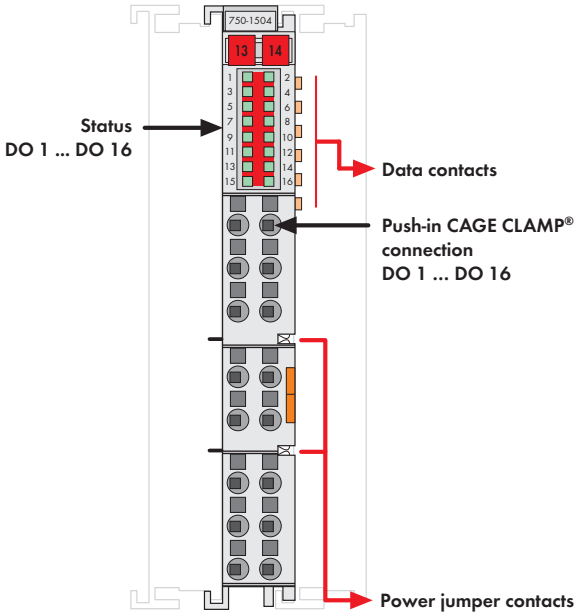

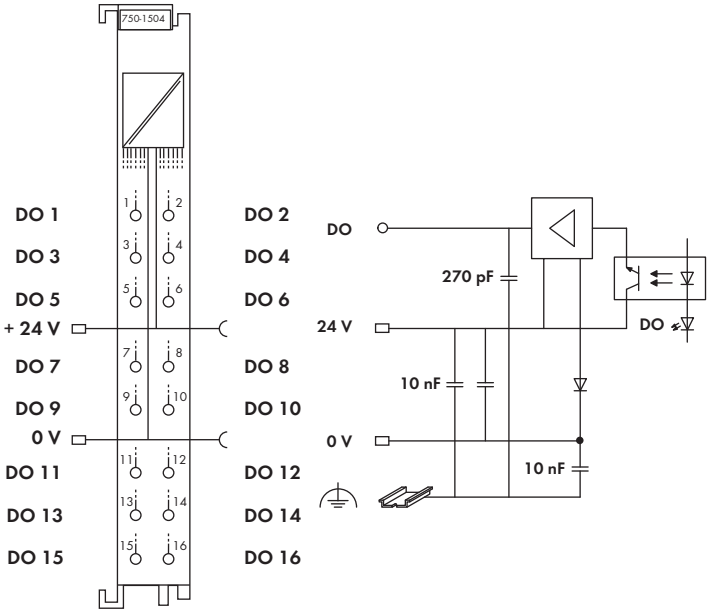

Delivered without miniature WSB markers

The digital output module provides 16 channels at a width of just 12mm (0.47in.).

It transmits binary control signals from the automation device to connected actuators (e.g., magnetic valves, contactors, transmitters, relays or other electrical loads).

The module has Push-in CAGE CLAMP® connections enabling solid conductors to be inserted directly.

A green LED indicates the switched status of each channel.

An optocoupler provides electrical isolation between the bus and the field side.

Description	Item No.	Pack. Unit
16DO 24V DC 0.5A	**750-1504**	1
Interference-free for use in safety functions (see manual)		

Accessories		Item No.	Pack. Unit
Miniature WSB Quick marking system			
	plain	**248-501**	5
	with marking	see Section 11	
Operating tool, with partially insulated shaft, type 1, blade (2.5 x 0.4) mm		**210-719**	50

Approvals

Conformity marking	CE
Korea Certification	
Marine applications	ABS, BV, DNV, GL, KR, LR, NKK, PRS, RINA
UL 508	
ANSI/ISA 12.12.01	Class I, Div. 2, Grp. ABCD, T4
TÜV 07 ATEX 554086 X	I M2 Ex d I Mb, II 3 G Ex nA IIC T4 Gc, II 3 D Ex tc IIIC T135°C Dc
IECEx TUN 09.0001 X	Ex d I Mb, Ex nA IIC T4 Gc, Ex tc IIIC T135°C Dc

Technical Data

No. of outputs	16
Max. current consumption (internal)	40 mA
Voltage via power jumper contacts	24 V DC (-25 % ... +30 %)
Type of load	resistive, inductive, lamps
Max. switching frequency	1kHz
Output current (max.)	0.5 A, short-circuit protected
Current consumption typ. (field side)	29mA
Isolation	500 V system/field
Wire connection	Push-in CAGE CLAMP®
Cross sections	solid:
	0.08 mm² ... 1.5 mm² / AWG 28 ... 16
	fine-stranded:
	0.25 mm² ... 1.5 mm² / AWG 22 ... 16
Strip lengths	8 ... 9 mm / 0.33 in
Width	12 mm
Weight	63.7 g
EMC immunity of interference	acc. to EN 61000-6-2, marine applications
EMC emission of interference	acc. to EN 61000-6-3, marine applications

16-Channel Digital Output Module 24 V DC

Ribbon cable, low-side switching

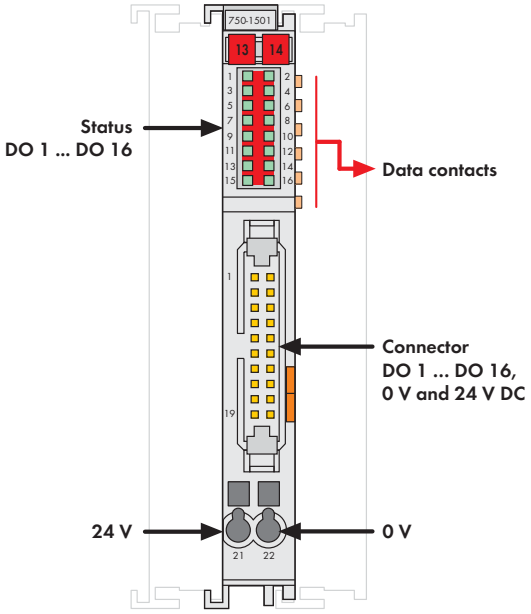

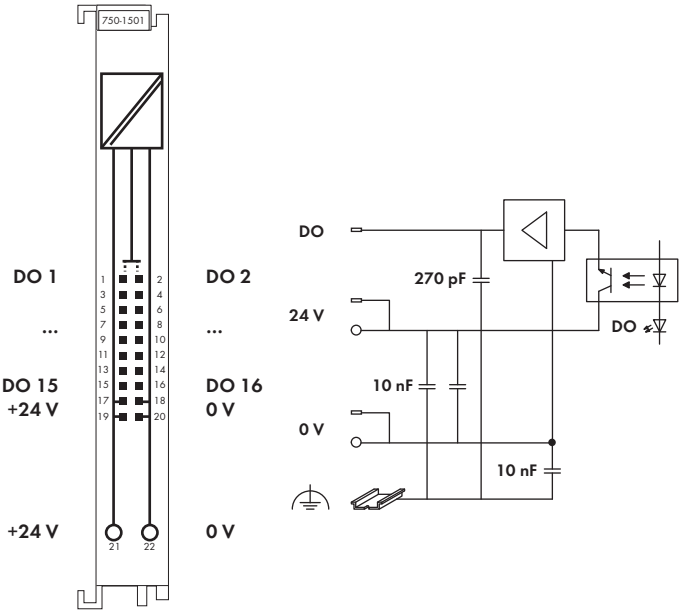

Delivered without miniature WSB markers

The digital output module provides 16 channels at a width of just 12mm (0.47in.).

It transmits binary control signals from the automation device to connected actuators (e.g., magnetic valves, contactors, transmitters, relays or other electrical loads).

The module connects electronic modules via a 20-pole flat cable.

The 24V power is fed to the electronic modules via two CAGE CLAMP® terminals.

A green LED indicates the switched status of each channel.

An optocoupler provides electrical isolation between the bus and the field side.

Description	Item No.	Pack. Unit
16DO 24V DC 0.5A, ribbon cable, low-side switching	**750-1501**	1
Interference-free for use in safety functions (see manual)		

Accessories		Item No.	Pack. Unit
Miniature WSB Quick marking system			
	plain	**248-501**	5
	with marking	see Section 11	
Cable and interface modules		see Section 11	

Approvals

Conformity marking	CE
Korea Certification	
Marine applications	ABS, BV, DNV, GL, KR, LR, NKK, PRS, RINA
cULus UL 508	
cULus ANSI/ISA 12.12.01	Class I, Div. 2, Grp. ABCD, T4
TÜV 07 ATEX 554086 X	I M2 Ex d I Mb, II 3 G Ex nA IIC T4 Gc, II 3 D Ex tc IIIC T135°C Dc
IECEx TUN 09.0001 X	Ex d I Mb, Ex nA IIC T4 Gc, Ex tc IIIC T135°C Dc

Technical Data

No. of outputs	16
Max. current consumption (internal)	40 mA
Voltage supply	24 V DC (-25 % ... +30 %)
Type of load	resistive, inductive, lamps
Max. switching frequency	1kHz
Output current (max.)	0.5 A, short-circuit protected
Current consumption typ. (field side)	11mA
Isolation	500 V system/field
Wire connection	20-pin male connector / CAGE CLAMP®
Cross sections CAGE CLAMP®	0.08 mm² ... 2.5 mm² / AWG 28 ... 16
Strip lengths	8 ... 9 mm / 0.33 in
Dimensions (mm) W x H x L	12 x 73 x 100
	Height from upper-edge of DIN 35 rail
Weight	43.5 g
EMC immunity of interference	acc. to EN 61000-6-2, marine applications
EMC emission of interference	acc. to EN 61000-6-3, marine applications

16-Channel Digital Output Module 24 V DC

Low-side switching

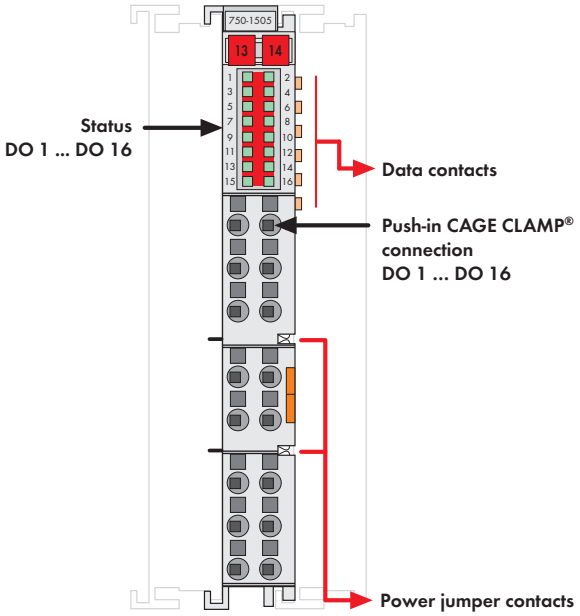

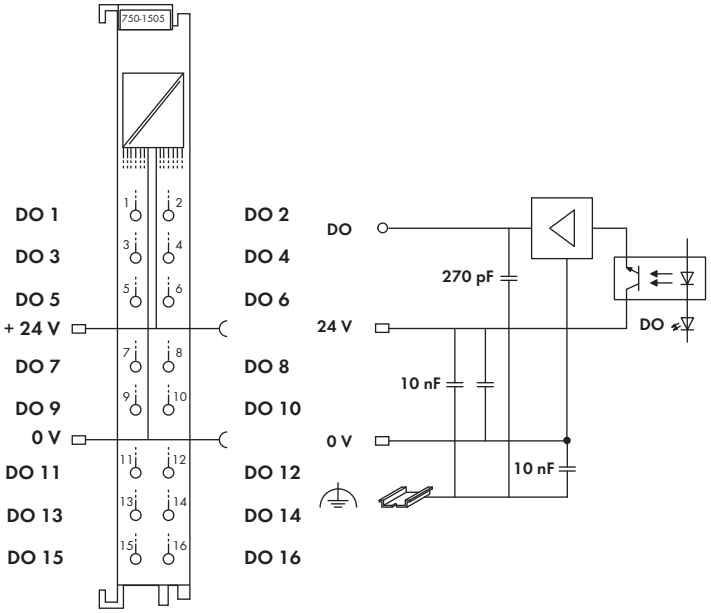

Delivered without miniature WSB markers

The digital output module provides 16 channels at a width of just 12mm (0.47in.).

It transmits binary control signals from the automation device to connected actuators (e.g., magnetic valves, contactors, transmitters, relays or other electrical loads).

The module has Push-in CAGE CLAMP® connections enabling solid conductors to be inserted directly.

A green LED indicates the switched status of each channel.

An optocoupler provides electrical isolation between the bus and the field side.

Description	Item No.	Pack. Unit
16DO 24VDC 0.5A, low-side switching	**750-1505**	1
Interference-free for use in safety functions (see manual)		

Accessories		Item No.	Pack. Unit
Miniature WSB Quick marking system			
	plain	**248-501**	5
	with marking	see Section 11	
Operating tool, with partially insulated shaft, type 1, blade (2.5 x 0.4) mm		**210-719**	50

Approvals

Conformity marking	CE
Korea Certification	
Marine applications	ABS, BV, DNV, GL, KR, LR, NKK, PRS, RINA
UL 508	
ANSI/ISA 12.12.01	Class I, Div. 2, Grp. ABCD, T4
TÜV 07 ATEX 554086 X	I M2 Ex d I Mb, II 3 G Ex nA IIC T4 Gc, II 3 D Ex tc IIIC T135°C Dc
IECEx TUN 09.0001 X	Ex d I Mb, Ex nA IIC T4 Gc, Ex tc IIIC T135°C Dc

Technical Data

No. of outputs	16
Max. current consumption (internal)	40 mA
Voltage via power jumper contacts	24 V DC (-25 % ... +30 %)
Type of load	resistive, inductive, lamps
Max. switching frequency	1kHz
Output current (max.)	0.5 A, short-circuit protected
Current consumption typ. (field side)	11mA
Isolation	500 V system/field
Wire connection	Push-in CAGE CLAMP®
Cross sections	solid:
	0.08 mm² ... 1.5 mm² / AWG 28 ... 16
	fine-stranded:
	0.25 mm² ... 1.5 mm² / AWG 22 ... 16
Strip lengths	8 ... 9 mm / 0.33 in
Width	12 mm
Weight	60 g
EMC immunity of interference	acc. to EN 61000-6-2, marine applications
EMC emission of interference	acc. to EN 61000-6-3, marine applications

4-Channel Digital Output Module 120 (230) V AC

Short-circuit protected; high-side switching

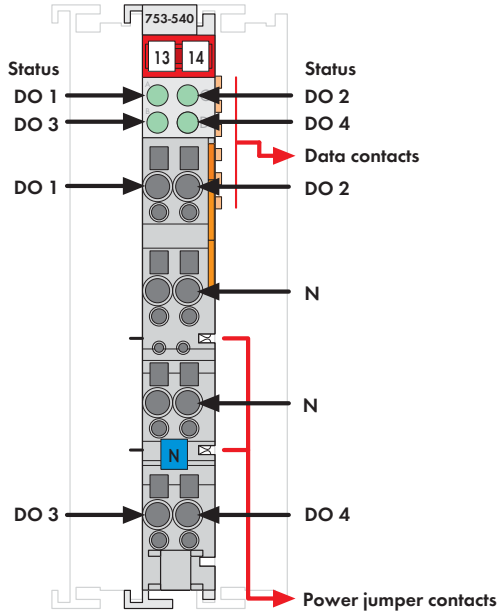

Delivered without miniature WSB markers

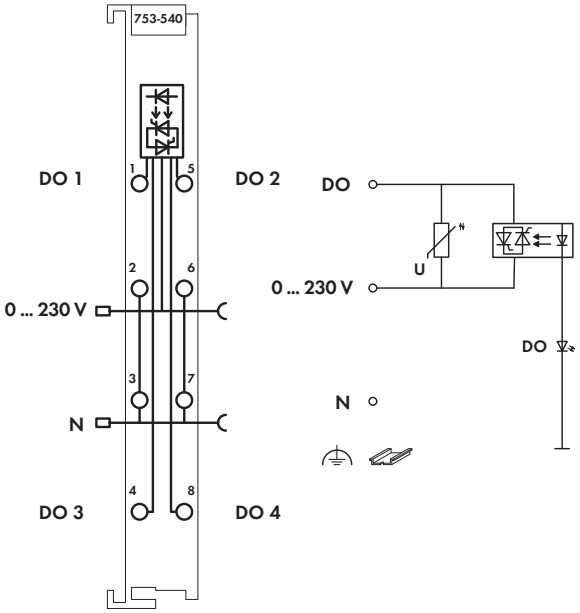

Control signals are transmitted from the automation device to connected actuators via the digital output module.

The module has four output channels and four actuators may be connected to it.

The switched status of the outputs is shown by an LED.

Field and system levels are electrically isolated.

Notice:
An additional supply module must be added for operation with 120 (230) VAC!

Description	Item No.	Pack. Unit
4DO 120 (230)V AC 0.25A (without connector)	**753-540**	1

Accessories		Item No.	Pack. Unit
	753 Series Connectors	**753-110**	25
	Coding elements	**753-150**	100
	Miniature WSB Quick marking system		
	plain	**248-501**	5
	with marking	see Section 11	

Approvals

Conformity marking	CE
UL 508	
ANSI/ISA 12.12.01	Class I, Div. 2, Grp. ABCD, T4
TÜV 07 ATEX 554086 X	I M2 Ex d I Mb, II 3 G Ex nA IIC T4 Gc, II 3 D Ex tc IIIC T135°C Dc
IECEx TUN 09.0001 X	Ex d I Mb, Ex nA IIC T4 Gc, Ex tc IIIC T135°C Dc

Technical Data

No. of outputs	4
Current consumption (internal)	18 mA
Voltage via power jumper contacts	0 V ... 230 V AC (+10 %)
Overvoltage protection	275 V AC varistor
Type of load	resistive, inductive
Short-circuit current	max. 10 A (16 ms)
Responce time/Drop-out time (max.)	10 ms at 50 Hz (zero crossing switch)
ON voltage difference L-DO max.	1.2 V
Output current	0.25 A, short-circuit-protected
Isolation	1.5 kV eff. (field/system)*; * 2.5 kV rated surge voltage
Internal bit width	4 bits
Wire connection	CAGE CLAMP®
Cross sections	0.08 mm² ... 2.5 mm² / AWG 28 ... 14
Strip lengths	9 ... 10 mm / 0.37 in
Width	12 mm
Weight	42.3 g
EMC immunity of interference	acc. to EN 61000-6-2
EMC emission of interference	acc. to EN 61000-6-4

2-Channel Digital Output Module 230 V AC/DC

with solid state relay 0.3 A

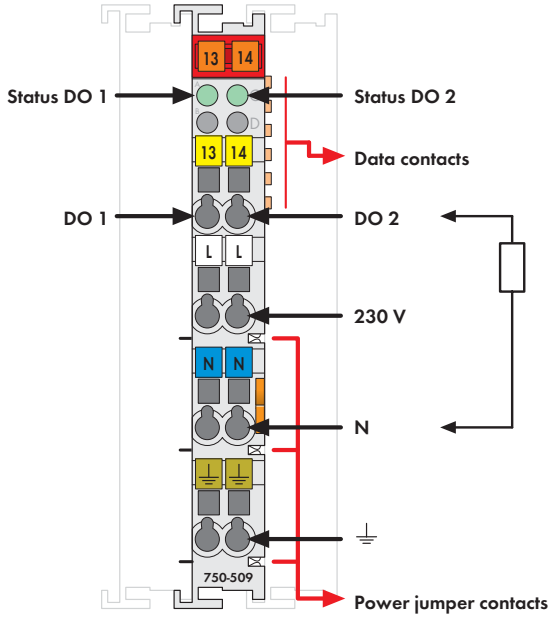

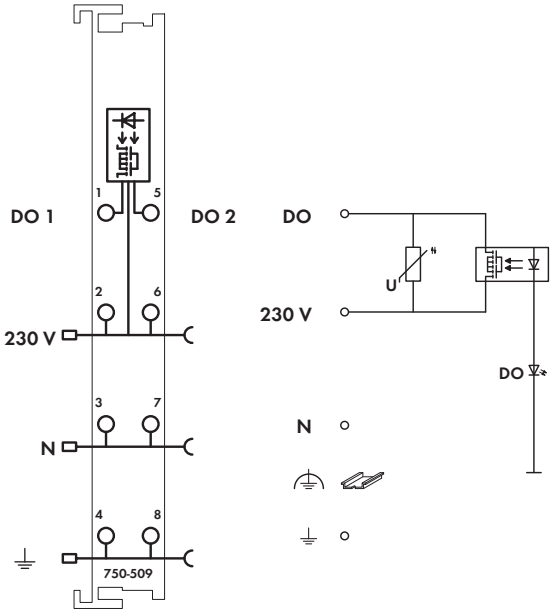

Fig. 750 Series
Delivered without miniature WSB markers

Control signals are transmitted from the automation device to connected actuators via the digital output module.

The semiconductor output is electrically isolated from the control side. Power supply for the outputs is provided via the power jumper contacts.

The switched status of the outputs is shown by an LED.

Notice:
An additional supply module must be added for operation with 230V AC/DC!

Description	Item No.	Pack. Unit
2DO 230V AC 0.3A/SSR	**750-509**	1
2DO 230V AC 0.3A/SSR (without connector)	**753-509**	1

Accessories		Item No.	Pack. Unit
	753 Series Connectors	**753-110**	25
	Coding elements	**753-150**	100
	Miniature WSB Quick marking system		
	plain	**248-501**	5
	with marking	see Section 11	

Approvals

Conformity marking	CE
Korea Certification	
Marine applications	ABS, BV, DNV, GL, KR, LR, NKK, PRS, RINA
UL 508	
ANSI/ISA 12.12.01	Class I, Div. 2, Grp. ABCD, T4
TÜV 07 ATEX 554086 X	I M2 Ex d I Mb, II 3 G Ex nA IIC T4 Gc, II 3 D Ex tc IIIC T135°C Dc
IECEx TUN 09.0001 X	Ex d I Mb, Ex nA IIC T4 Gc, Ex tc IIIC T135°C Dc

Technical Data

No. of outputs	2
Current consumption (internal)	10 mA
Max. switching voltage	0 V ... 230 V AC/DC
Switching current	300 mA
Peak current	0.5 A (20 s); 1.5 A (0.1 s)
Max. switching frequency	5 Hz (24 V 0.3 A DF = 50 %); 0.5 Hz (230 V 0.3 A DF = 50 %)
Pull-in time (typ.)	4 ms
Pull-in time (max.)	10 ms
Drop-out time (typ.)	0.1 ms
Drop-out time (max.)	3 ms
R ON (typ.)	2.1 Ω
R ON (max.)	3.2 Ω
Overvoltage protection	275 V AC (varistor)
Isolation	1.5 kV eff. (field/system)*; * 2.5 kV rated surge voltage
Internal bit width	2 bits
Wire connection	CAGE CLAMP®
Cross sections	0.08 mm² ... 2.5 mm² / AWG 28 ... 14
Strip lengths, 750/753 Series	8 ... 9 mm / 0.33 in 9 ... 10 mm / 0.37 in
Width	12 mm
Weight	54.5 g
EMC immunity of interference	acc. to EN 61000-6-2, marine applications
EMC emission of interference	acc. to EN 61000-6-4, marine applications

2-Channel Digital Output Module 230 V AC

with solid state relay 3.0 A for 30 s

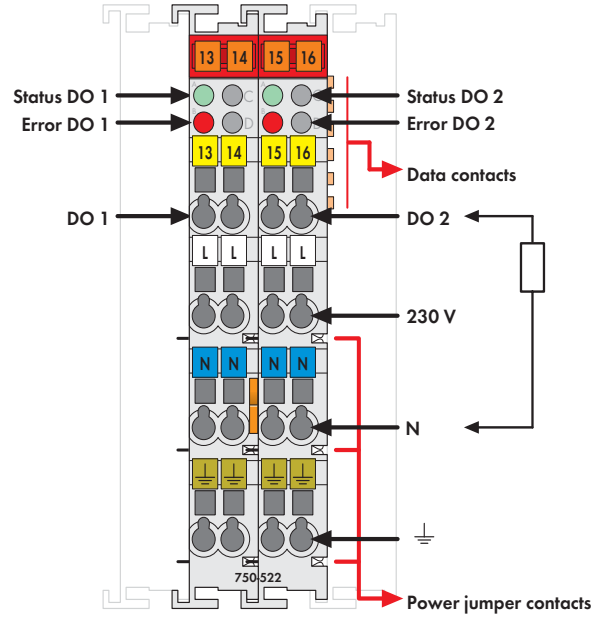

Delivered without miniature WSB markers

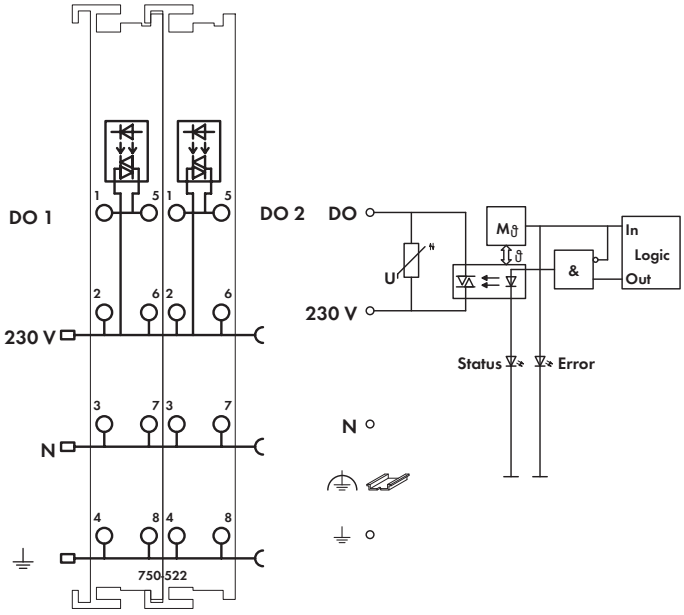

The digital output module controls actuators via semiconductor outputs.
The bus module receives the control signal via a fieldbus coupler.

The control of the outputs is fully isolated.
The outputs are switched at the zero cross.
Power supply for the outputs is provided via the power jumper contacts.

Each output has its own overload protection which is realized via an internal temperature limit. In case of an overload, the bus module switches off the output. After the output connection has cooled down, it triggers the output again. The error bit reports the overload in the process image.

Notice:
An additional supply module must be added for operation with 230VAC!

Description	Item No.	Pack. Unit
2DO 230V AC 3.0A/30s/SSR	**750-522**	1

Accessories		Item No.	Pack. Unit
Miniature WSB Quick marking system			
	plain	**248-501**	5
	with marking	see Section 11	

Approvals

Conformity marking	CE
Korea Certification	
UL 508	
ANSI/ISA 12.12.01	Class I, Div. 2, Grp. ABCD, T4
TÜV 12.1297 X (Brazil)	Ex nA IIC T4 Gc
TÜV 07 ATEX 554086 X	I M2 Ex d I Mb, II 3 G Ex nA IIC T4 Gc, II 3 D Ex tc IIIC T135°C Dc
IECEx TUN 09.0001 X	Ex d I Mb, Ex nA IIC T4 Gc, Ex tc IIIC T135°C Dc

Technical Data

No. of outputs	2 make contacts
Current consumption typ. (internal)	40 mA
Max. switching voltage	35 V ... 230 V AC
Switching current (nom.)	0.5 A per channel
Min. switching current	50 mA
Max. switching current	3 A (< 30 s operating time) each channel for a turn-on cycle of 1 hour
Peak current	18 A (100 ms); 30 A (10 ms)
Max. switching frequency	50 Hz
Overvoltage protection	275 V AC (varistor)
Operating speed (typ.)	1.65 ms
Operating speed (max.)	15 ms
Leakage current when turned off	< 2.3 mA
Isolation	3 kV system/supply
Internal bit width	2 bits in, 2 bits out
Wire connection	CAGE CLAMP®
Cross sections	0.08 mm² ... 2.5 mm² / AWG 28 ... 14
Strip lengths	8 ... 9 mm / 0.33 in
Width	24 mm
Weight	115 g
EMC immunity of interference	acc. to EN 61000-6-2
EMC emission of interference	acc. to EN 61000-6-4

2-Channel Relay Output Module 125 V AC, 30 V DC

Isolated outputs; 2 changeover contacts

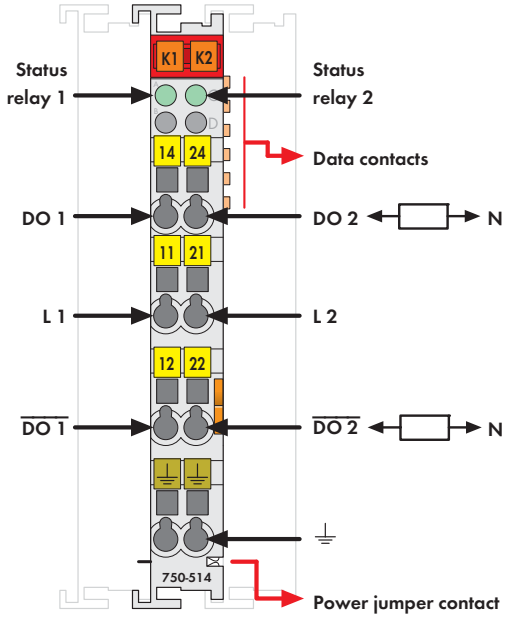

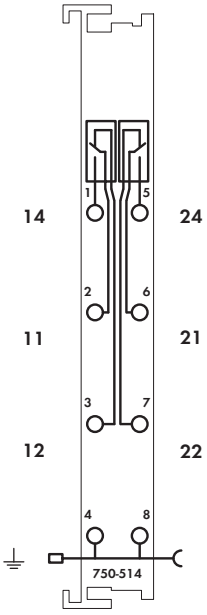

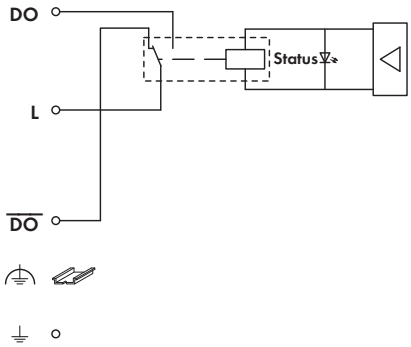

Fig. 750 Series
Delivered without miniature WSB markers

Control signals are transmitted from the automation device to connected actuators via the digital output module.

The internal system voltage is used to trigger the relay.

The NO contacts are electrically isolated.

The switched status of the relay is shown by an LED.

Description	Item No.	Pack. Unit
2DO 125V AC 0.5A/ Relay 2CO/ Potential Free	**750-514**	1
2DO 125V AC 0.5A/ Relay 2CO/ Potential Free (without connector)	**753-514**	1

Accessories		Item No.	Pack. Unit
	753 Series Connectors	**753-110**	25
	Coding elements	**753-150**	100
	Miniature WSB Quick marking system		
	plain	**248-501**	5
	with marking	see Section 11	

Approvals

Conformity marking	CE
Korea Certification	
Marine applications	ABS, BV, DNV, GL, KR, LR, NKK, PRS, RINA
UL 508	

Technical Data

No. of outputs	2 changeover contacts
Current consumption typ. (internal)	70 mA
Max. switching voltage	125 V AC / 30 V DC
Switching power	62.5 VA / 30 W
Min. switching current	0.01 mA / 10 mV DC
Max. switching current	0.5 A AC / 1 A DC
Max. switching frequency	20/min
Pull-in time (max.)	4 ms
Drop-out time (max.)	4 ms
Contact material	Silver alloy, gold-plated
Mechanical life (min.)	1×10^8 switching operations
Electrical life (min.)	1×10^5 (0.5 A / 125 V AC)
	2×10^5 (1 A / 30 V DC)
Isolation	1.5 kV eff. (field/system)*;
	* 2.5 kV rated surge voltage
Internal bit width	2 bits
Wire connection	CAGE CLAMP®
Cross sections	0.08 mm² ... 2.5 mm² / AWG 28 ... 14
Strip lengths, 750/753 Series	8 ... 9 mm / 0.33 in
	9 ... 10 mm / 0.37 in
Width	12 mm
Weight	49.5 g
EMC immunity of interference	acc. to EN 61000-6-2, marine applications
EMC emission of interference	acc. to EN 61000-6-4, marine applications

2-Channel Relay Output Module 230 VAC, 1.0 A

Isolated outputs; 2 changeover contacts

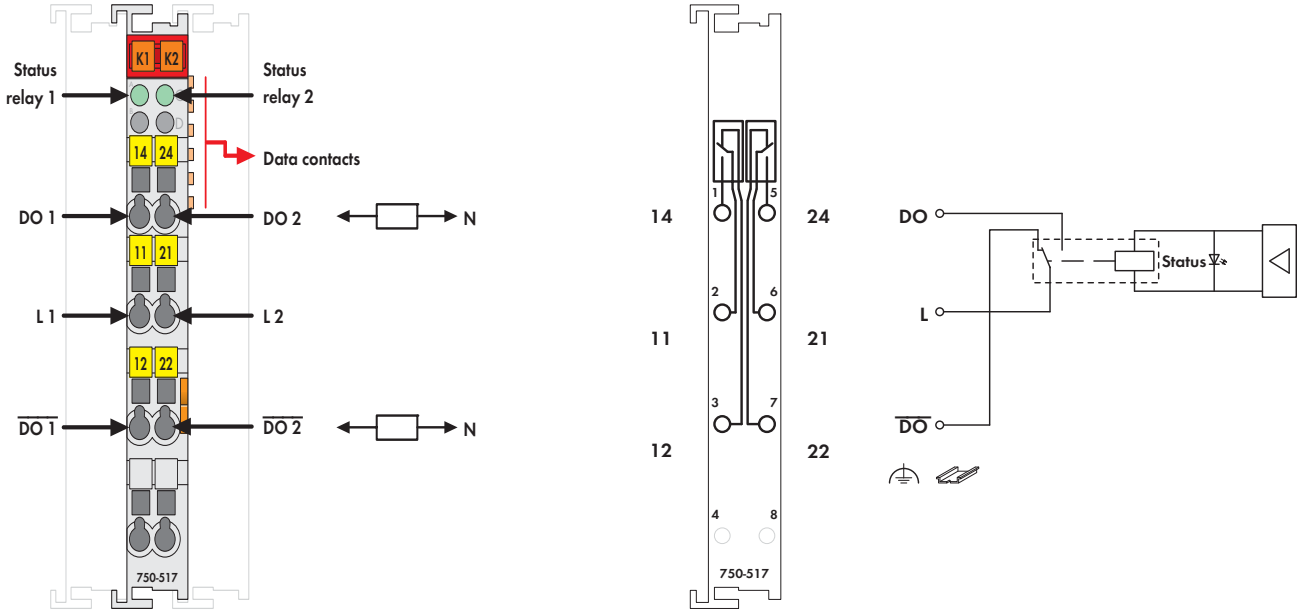

Fig. 750 Series
Delivered without miniature WSB markers

Control signals are transmitted from the automation device to connected actuators via the digital output module.

The internal system voltage is used to trigger the relay.

The NO contacts are electrically isolated.

The switched status of the relay is shown by an LED.

Description	Item No.	Pack. Unit
2DO 230V AC 1.0A/ Relay 2CO/ Potential Free	**750-517**	1
2DO 230V AC 1.0A/ Relay 2CO/ Potential Free (without connector)	**753-517**	1

Accessories		Item No.	Pack. Unit
	753 Series Connectors	**753-110**	25
	Coding elements	**753-150**	100
	Miniature WSB Quick marking system		
	plain	**248-501**	5
	with marking	see Section 11	

Approvals

Conformity marking	CE
Korea Certification	
Marine applications	ABS, BV, DNV, GL, KR, LR, NKK, PRS, RINA
UL 508	
ANSI/ISA 12.12.01	Class I, Div. 2, Grp. ABCD, T4
TÜV 07 ATEX 554086 X	I M2 Ex d I Mb, II 3 G Ex nA nC IIC T4 Gc, II 3 D Ex tc IIIC T135°C Dc
IECEx TUN 09.0001 X	Ex d I Mb, Ex nA nC IIC T4 Gc, Ex tc IIIC T135°C Dc

Technical Data

No. of outputs	2 changeover contacts
Max. current consumption (internal)	90 mA
Max. switching voltage	250 V AC / 300 V DC
Min. switching current	100 mA / 12 V DC
Max. switching current	1A AC; 1 A at 40 V DC; 0.15 A at 300 V DC
Max. switching frequency	6/min (at nominal load)
Pull-in time (max.)	8 ms
Drop-out time (max.)	4 ms
Contact material	Silver alloy
Mechanical life (min.)	5 x 10^6 switching operations
Electrical life (min.)	1 x 10^6 switching operations (1 A / 250 V
Isolation	1.5 kV eff. (field/system)*; * 2.5 kV rated surge voltage
Internal bit width	2 bits
Wire connection	CAGE CLAMP®
Cross sections	0.08 mm² ... 2.5 mm² / AWG 28 ... 14
Strip lengths, 750/753 Series	8 ... 9 mm / 0.33 in 9 ... 10 mm / 0.37 in
Width	12 mm
Weight	53.3 g
EMC immunity of interference	acc. to EN 61000-6-2, marine applications
EMC emission of interference	acc. to EN 61000-6-4, marine applications

2-Channel Relay Output Module 230 V AC, 30 V DC

Non-floating; 2 make contacts

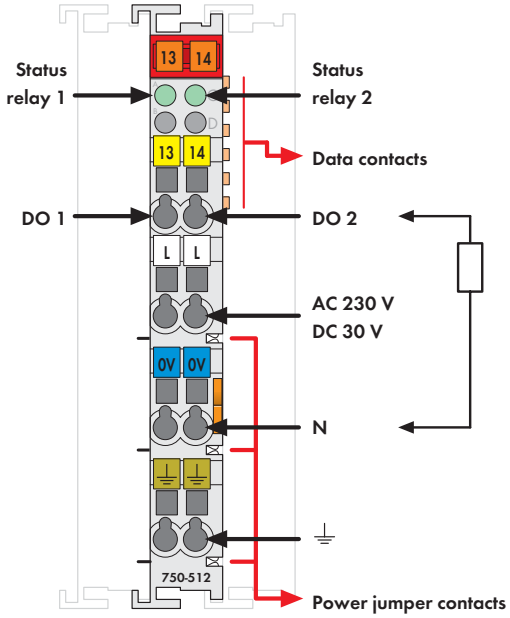

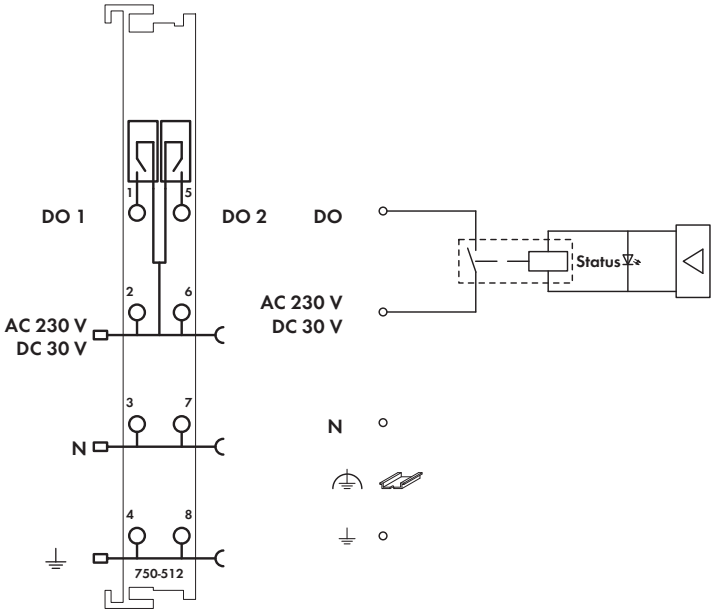

Fig. 750 Series
Delivered without miniature WSB markers

Control signals are transmitted from the automation device to connected actuators via the digital output module.

The internal system voltage is used to trigger the relay.

Note that the power jumper contacts supply both "N" (common point) and switched output voltages (this may be DC or AC).

The switched status of the relay is shown by an LED.

Notice:
An additional supply module must be added for operation with 250VAC / 30VDC!

Description	Item No.	Pack. Unit
2DO 230V AC 2.0A/ Relay 2NO	**750-512**	1
2DO 230V AC 2.0A/ Relay 2NO (without connector)	**753-512**	1

Accessories	Item No.	Pack. Unit
753 Series Connectors	**753-110**	25
Coding elements	**753-150**	100
Miniature WSB Quick marking system		
plain	**248-501**	5
with marking	see Section 11	

Approvals

Conformity marking	CE
Korea Certification	
Marine applications	ABS, BV, DNV, GL, KR, LR, NKK, PRS, RINA
UL 508	
ANSI/ISA 12.12.01	Class I, Div. 2, Grp. ABCD, T4
TÜV 07 ATEX 554086 X	I M2 Ex d I Mb,
	II 3 G Ex nA nC IIC T4 Gc,
	II 3 D Ex tc IIIC T135°C Dc
IECEx TUN 09.0001 X	Ex d I Mb,
	Ex nA nC IIC T4 Gc,
	Ex tc IIIC T135°C Dc

Technical Data

No. of outputs	2 make contacts
Max. current consumption (internal)	100 mA
Max. switching voltage	250 V AC / 30 V DC
Switching power	500 VA / 60 W (resistive load)
	cos j max. =0.4; L/R max = 7 ms
Min. switching current	10 mA / 5 V DC
Max. switching current	2 A AC/DC
Max. switching frequency	30/min (at nominal load)
Pull-in time (max.)	10 ms
Bounce time (typ.)	1.2 ms
Drop-out time (max.)	10 ms
Contact material	Silver alloy
Mechanical life (min.)	2 x 10^7 switching operations
Electrical life (min.)	3 x 10^5 switching operations
	(2 A / 250 V AC) or (2 A / 30 V DC)
Isolation	1.5 kV eff. (field/system)*;
	* 2.5 kV rated surge voltage
Internal bit width	2 bits
Wire connection	CAGE CLAMP®
Cross sections	0.08 mm² ... 2.5 mm² / AWG 28 ... 14
Strip lengths, 750/753 Series	8 ... 9 mm / 0.33 in
	9 ... 10 mm / 0.37 in
Width	12 mm
Weight	54.5 g
EMC immunity of interference	acc. to EN 61000-6-2, marine applications
EMC emission of interference	acc. to EN 61000-6-4, marine applications

2-Channel Relay Output Module 230 V AC, 30 V DC

Isolated outputs; 2 make contacts

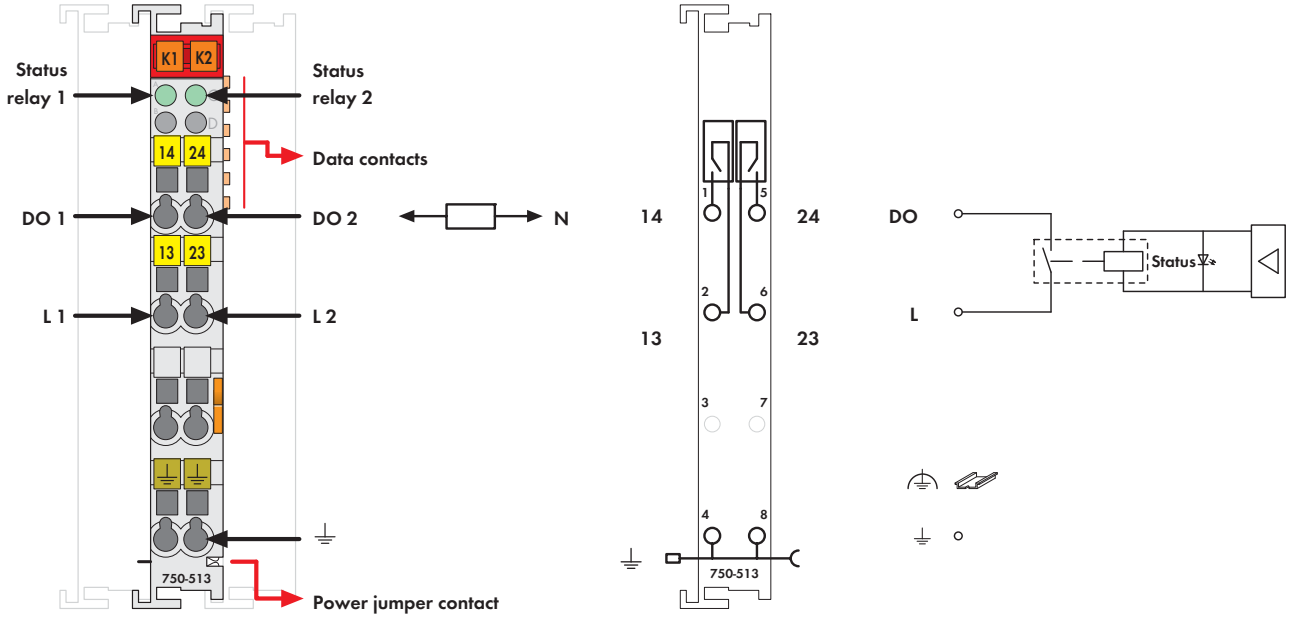

Fig. 750 Series
Delivered without miniature WSB markers

Control signals are transmitted from the automation device to connected actuators via the digital output module.

The internal system voltage is used to trigger the relay.

The NO contacts are electrically isolated.

The switched status of the relay is shown by an LED.

Description	Item No.	Pack. Unit
2DO 230V AC 2.0A/ Relay 2NO/ Potential Free	**750-513**	1
2DO 230V AC 2.0A/ Relay 2NO/ Potential Free / without power jumper contacts	**750-513/000-001**	1
2DO 230V AC 2.0A/ Relay 2NO/ Potential Free (without connector)	**753-513**	1

Accessories		Item No.	Pack. Unit
	753 Series Connectors	**753-110**	25
	Coding elements	**753-150**	100
	Miniature WSB Quick marking system		
	plain	**248-501**	5
	with marking	see Section 11	

Approvals

Conformity marking	CE
Korea Certification	
Marine applications (versions upon request)	ABS, BV, DNV, GL, KR, LR, NKK, PRS, RINA
UL 508	
ANSI/ISA 12.12.01	Class I, Div. 2, Grp. ABCD, T4
TÜV 07 ATEX 554086 X	I M2 Ex d I Mb,
	II 3 G Ex nA nC IIC T4 Gc,
	II 3 D Ex tc IIIC T135°C Dc
IECEx TUN 09.0001 X	Ex d I Mb,
	Ex nA nC IIC T4 Gc,
	Ex tc IIIC T135°C Dc

Technical Data

No. of outputs	2 make contacts
Max. current consumption (internal)	100 mA
Max. switching voltage	250 V AC / 30 V DC
Switching power	500 VA / 60 W (resistive load)
	cos j max. =0.4; L/R max = 7 ms
Min. switching current	10 mA / 5 V DC
Max. switching current	2 A AC/DC
Max. switching frequency	30/min (at nominal load)
Pull-in time (max.)	10 ms
Bounce time (typ.)	1.2 ms
Drop-out time (max.)	10 ms
Contact material	Silver alloy
Mechanical life (min.)	2 x 10^7 switching operations
Electrical life (min.)	3 x 10^5 switching operations
	(2 A / 250 V AC) or (2 A / 30 V DC)
Isolation	1.5 kV eff. (field/system)*;
	* 2.5 kV rated surge voltage
Internal bit width	2 bits
Wire connection	CAGE CLAMP®
Cross sections	0.08 mm² ... 2.5 mm² / AWG 28 ... 14
Strip lengths, 750/753 Series	8 ... 9 mm / 0.33 in
	9 ... 10 mm / 0.37 in
Width	12 mm
Weight	53.5 g
EMC immunity of interference	acc. to EN 61000-6-2, marine applications
EMC emission of interference	acc. to EN 61000-6-4, marine applications

1-Channel Relay Output Module 230 V AC, 16 A

Isolated output; 1 make contact; bistable; manual operation

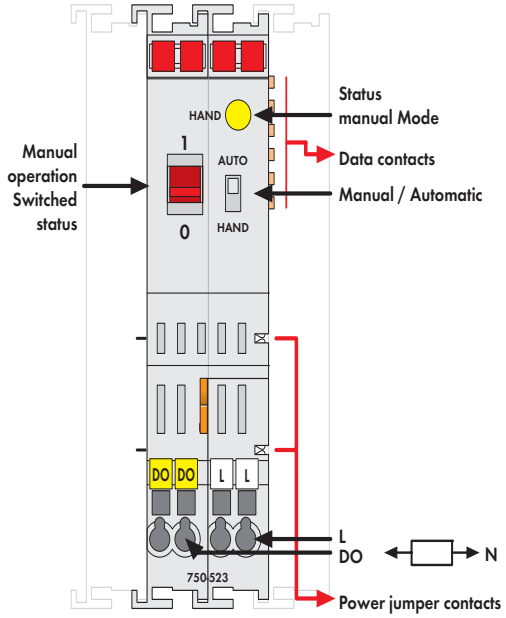

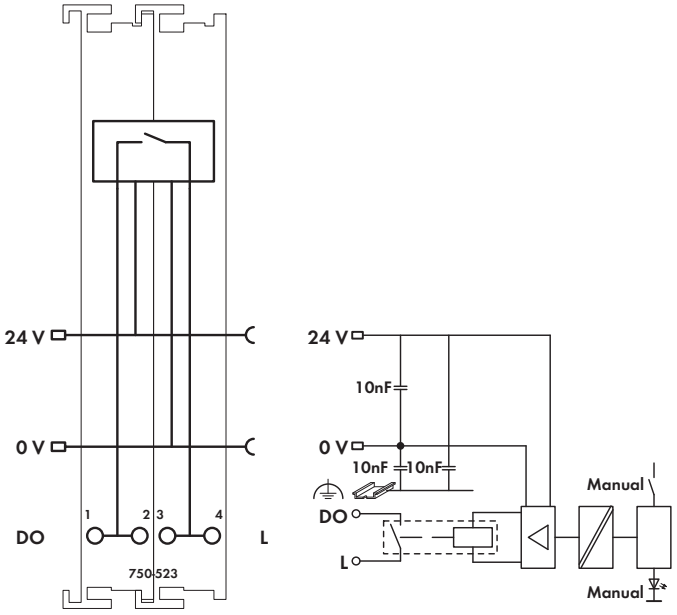

Delivered without miniature WSB markers

A connected actuator or load is switched via the relay output module. The 24VDC supply is derived from the power jumper contacts to trigger the relays. The switched status of the relay is shown by the manual switch (1/0). The operating mode can be set using a manual/automatic selector switch. The mode status is indicated by an LED and via status bits in the process image.
Manual: Coil triggering is interrupted. Actuation only via the red manual operating switches.
Auto: The relay is operated via the control system. Manual status changeover via manual operating switch is canceled by the control system in less than 500ms.
The manual switch can also be used without 24V supply to switch the output ON.

The relay meets both international standards of IEC and DIN EN 61810 part 1 /VDE 0435 part 201 as well as overload and short circuit requirements of IEC and DIN EN 61036 /61037.

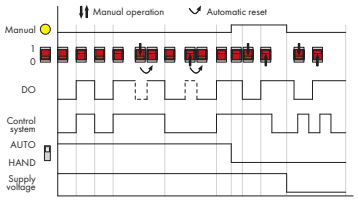

Description	Item No.	Pack. Unit
1DO 230V AC 16A Relay 1a/ Potential Free	**750-523**	1

Accessories		Item No.	Pack. Unit
Miniature WSB Quick marking system			
	plain	**248-501**	5
	with marking	see Section 11	

Approvals

Conformity marking	CE
Korea Certification	
Marine applications	ABS, BV, DNV, GL, KR, LR, NKK, PRS, RINA
UL 508	

Technical Data

Switchable lamp loads 100000 operations / 30000 operations	
Incandescent lamp	1.25 kW / 2.5 kW
Fluorescent lamp, not compensated	1.2 kW / 2.5 kW
Fluorescent lamp, parallel compensated	650 W / 70 µF / 1.3 kW / 140 µF
Fluorescent lamp, dual circuit	2 x 1.2 kW / 2 x 2.5 kW
Halogen lamp (AC 230 V)	1.2 kW / 2.5 kW
Low voltage halogen lamp with transf.	500 VA / 500 VA
Mercury arc/Sodium discharge lamp, not compensated	1 kW / 2 kW
Mercury arc/Sodium discharge lamp, parallel compensated	1 kW / 70 µF / 2 kW / 140 µF
Dulux lamp, not compensated	800 W / 1.6 kW
Dulux lamp, parallel compensated	560 W / 70 µF / 1.1 kW / 140 µF

Technical Data

No. of outputs	1 make contact
Max. current consumption (internal)	5 mA
Max. switching voltage	440 V AC
Switching power	max. 5 kVA
Max. switching current	16 A AC
Contact material	AgSnO2
Mechanical life	10^6
Current consumption max. (field side)	80 mAs (peak current)
Isolation	1.5 kV eff. (field/system)*;
	* 2.5 kV rated surge voltage
Bit width	2 bits in (Manual status, -);
	2 bits out (DO, -)
Wire connection	CAGE CLAMP®
Cross sections	0.08 mm² ... 2.5 mm² / AWG 28 ... 14
Strip lengths	8 ... 9 mm / 0.33 in
Width	24 mm
Weight	123.7 g
EMC immunity of interference	acc. to EN 61000-6-2, marine applications
EMC emission of interference	acc. to EN 61000-6-3, marine applications

Analog Input Modules

Housing Design 750/753 Series	
Dimensions (mm) W x H x L	12 x 65 x 100 (Height from upper edge of the DIN-rail)
Wire connection	CAGE CLAMP®
Cross sections	0.08 mm² ... 2.5 mm² / 28 ... 14 AWG
Strip lengths	750 Series: 8 ... 9 mm / 0.33 in. 753 Series: 9 ... 10 mm / 0.37 in.

Housing Design Double Width	
Dimensions (mm) W x H x L	24 x 65 x 100 (Height from upper edge of the DIN-rail)

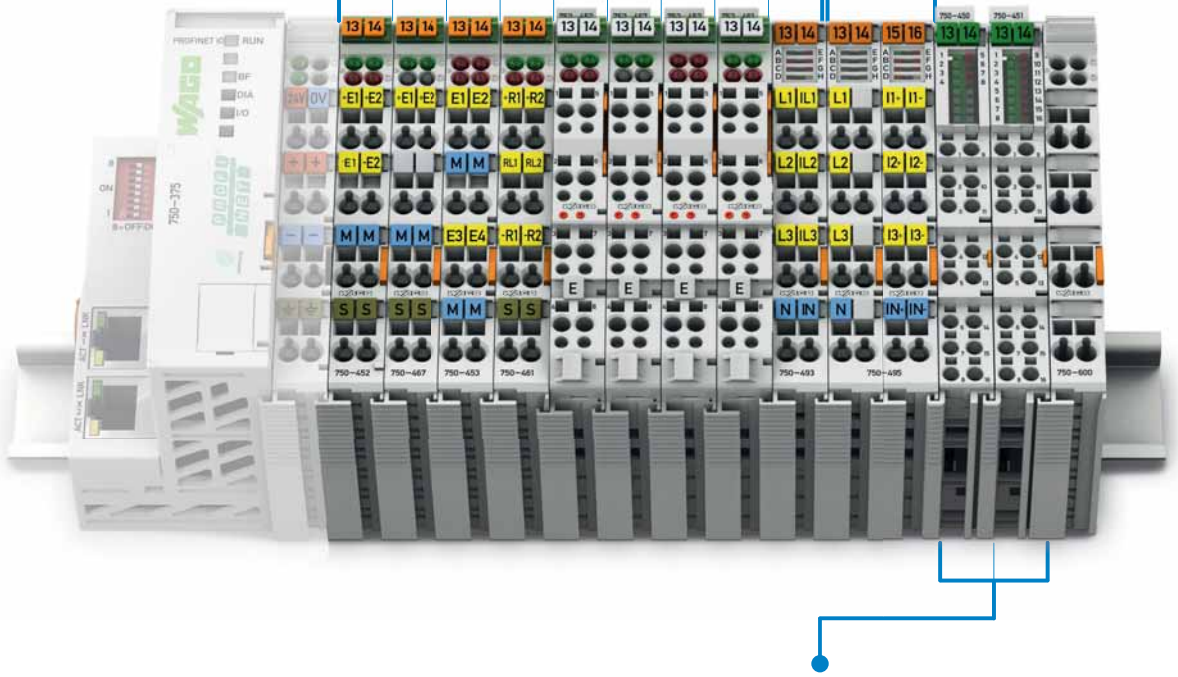

Housing Design 750 Series with Push-in CAGE CLAMP® Connection (16 Connection Terminals)	
Wire connection	Push-in CAGE CLAMP®
Cross sections	solid: 0.08 mm² ... 2.5 mm² / 28 ... 16 AWG fine-stranded: 0.25 mm² ... 1.5 mm² / 22 ... 16 AWG
Strip lengths	8 ... 9 mm / 0.33 in.

I/O-Systems; Analog Input Modules

Contents

Function	1-Channel AI	2-Channel AI	4-Channel AI	8-Channel AI	Description	Item No. Standard	/S5 or /S7 Data format	/T Extended operating temperature range: -20 °C ... +60 °C	Pluggable	Page
0 – 20 mA		■			Differential inputs	750-452	750-452/000-200		753-452	252
		■			Single-ended	750-465		750-465/025-000	753-465	253
		■			Single-ended, short-circuit protec. Single-ended, short-circuit protec., 60 Hz	750-470 750-470/005-000				254
		■			Single-ended, 16 bits	750-472	750-472/000-200		753-472	255
		■			Single-ended, 16 bits, 60 Hz	750-472/005-000				255
		■			Differential measurement inputs	750-480			753-480	256
		■			Differential measurement inputs, synchronous	750-480/000-001				256
			■		Single-ended	750-453			753-453	259
4 – 20 mA		■			Differential inputs	750-454	750-454/000-200	750-454/025-000	753-454	252
		■			Single-ended	750-466	750-466/000-200	750-466/025-000	753-466	253
		■			Single-ended, short-circuit protec. Single-ended, short-circuit protec., 60 Hz	750-473 750-473/005-000				254
		■			Single-ended, 16 bits	750-474	750-474/000-200		753-474	255
		■			Single-ended, 16 bits, 60 Hz	750-474/005-000				255
		■			Differential measurement inputs	750-492			753-492	257
		■			Single-ended, 16 bits, HART	750-482	750-482/000-300	750-482/025-000	753-482	258
			■		Single-ended	750-455		750-455/025-000	753-455	259
0 – 1 A		■			Differential inputs	750-475			753-475	260
0 – 5 A		■			Differential inputs	750-475/020-000				260
± 10 V		■			Differential inputs	750-456	750-456/000-200		753-456	261
		■			Differential measurement inputs	750-479			753-479	262
		■			Differential measurement inputs, synchronous	750-479/000-001				262
		■			Single-ended, 16 bits	750-476	750-476/000-200		753-476	263
			■		Single-ended	750-457		750-457/025-000	753-457	267
0 – 10 V		■			Differential inputs	750-477			753-477	264
		■			Single-ended	750-467	750-467/000-200		753-467	265
		■			Single-ended, 16 bits	750-478			753-478	263
		■			Single-ended, 16 bits, 60 Hz	750-478/005-000				263
			■		Single-ended	750-468	750-468/000-200	750-468/025-000		266
			■		Single-ended	750-459			753-459	267
0 – 30 V		■			Differential measurement inputs	750-483			753-483	268
Modules for RTDs		■			Pt100 / RTD / NTC 20kΩ	750-461	750-461/000-200	750-461/025-000	753-461	269
		■			Pt100 / Configurable	750-461/003-000			753-461/003-000	269
		■			NTC 20k	750-461/020-000				269
		■			Resistance Measur. other Versions	750-461/000-00x				269
			■		Pt100 / RTD Pt 1000 / RTD Ni 1000 TK6180 / RTD	750-460 750-460/000-003 750-460/000-005				270
			■		4AI RTD (Building Automation)	750-463				271
		■	■		RTD, configurable	750-464				272
			■		NTC, configurable	750-464/020-000				272
			■		4AI RTD configurable	750-450				273
				■	8AI RTD configurable	750-451				274
Thermocouples		■			K/Diagn.	750-469	750-469/000-200		753-469	275
		■			J/Diagn.	750-469/000-006				275
		■			Configurable	750-469/003-000			753-469/003-000	275
		■			S/; T/; ±120mV/; E/; L/Diagn.	750-469/000-00x				275
Analog Special Functions	■				Resistor Bridges (Strain Gauge) Resistor Bridges (Strain Gauge), 125ms	750-491 750-491/000-001				276
		■			3-Phase Power Measurement Module (1 A) 3-Phase Power Measurement Module (5 A)	750-493 750-493/000-001				277
		■			3-Phase Power Measur. Module (480 V/1 A)	750-494		750-494/025-000		278
		■			3-Phase Power Measur. Module (480 V/5 A)	750-494/000-001		750-494/025-001		278
		■			3-Phase Power Measur. Module (690 V/1 A) 3-Phase Power Measur. Module (690 V/5 A) 3-Phase Power Measur. Module (690 V/RC)	750-495 750-495/000-001 750-495/000-002				279
Exi										see Section 4.9

2-Channel Analog Input Module 0/4-20 mA

Differential inputs

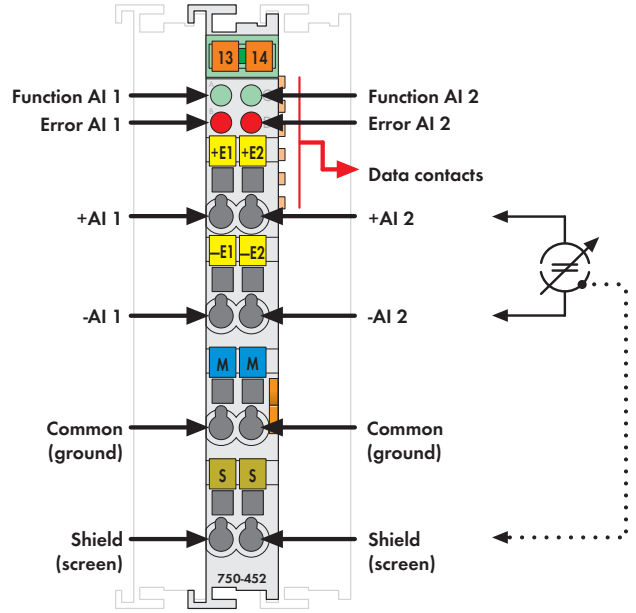

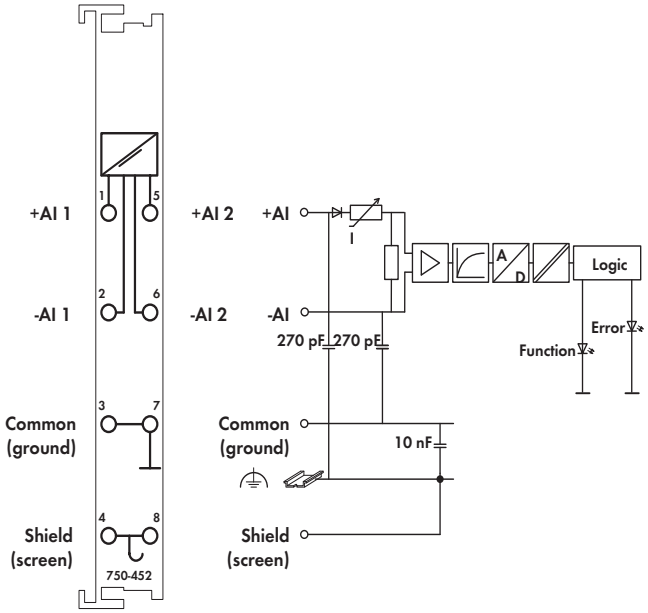

Fig. 750 Series
Delivered without miniature WSB markers

The analog input module receives signals with standardized values of 0-20mA and 4-20mA.

The input signal is electrically isolated and will be transmitted with a resolution of 12 bits.

The internal system supply (via the data bus contacts) is used for the power supply of the module.

The input channels are differential inputs.

The shield (screen) is directly connected to the DIN rail.

Description	Item No.	Pack. Unit
2AI 0-20mA Diff.	**750-452**	1
2AI 4-20mA Diff.	**750-454**	1
2AI 0-20mA Diff./S5 [1]	**750-452/000-200**	1
2AI 4-20mA Diff./EM	**750-454/000-003**	1
2AI 4-20mA Diff./EM/T	**750-454/025-003**	1
Extended temperature range: -20 °C ... +60 °C		
2AI 4-20mA Diff./S5 [1]	**750-454/000-200**	1
2AI 4-20mA Diff./T	**750-454/025-000**	1
2AI 0-20mA Diff. (without connector)	**753-452**	1
2AI 4-20mA Diff. (without connector)	**753-454**	1
Extended temperature range: -20 °C ... +60 °C		

[1] Data format for S5 control with FB 251

Accessories	Item No.	Pack. Unit
753 Series Connectors	**753-110**	25
Coding elements	**753-150**	100
Miniature WSB Quick marking system		
plain	**248-501**	5
with marking	see Section 11	

Approvals

Conformity marking	CE
Korea Certification	[1]
Marine applications (versions upon request)	ABS, BV, DNV, GL, KR, LR, NKK, PRS, RINA
UL 508	
ANSI/ISA 12.12.01	Class I, Div. 2, Grp. ABCD, T4
TÜV 07 ATEX 554086 X	I M2 Ex d I Mb,
	II 3 G Ex nA IIC T4 Gc,
	II 3 D Ex tc IIIC T135°C Dc
IECEx TUN 09.0001 X	Ex d I Mb,
	Ex nA IIC T4 Gc,
	Ex tc IIIC T135°C Dc

[1] Does not apply to 750-454/000-003, .../025-003

Technical Data	
Number of inputs	2
Power supply	via system voltage DC/DC
Current consumption typ. (internal)	70 mA
Common mode voltage (max.)	35 V DC
Signal current	0 - 20mA (750-452 / 753-452)
	4 - 20mA (750-454 / 753-454)
	3.8 mA ... 20.5 mA (750-454/...-003)
Input resistance	< 220 Ω / 20 mA
Resolution	12 bits
Conversion time (typ.)	2 ms
Measuring error (25 °C)	< ± 0.2 % of the full scale value
Temperature coefficient	< ± 0.01 % / K of the full scale value
Isolation	500 V system/supply
Bit width	2 x 16 bits data
	2 x 8 bits control/status (optional)
Wire connection	CAGE CLAMP®
Cross sections	0.08 mm² ... 2.5 mm² / AWG 28 ... 14
Strip lengths, 750/753 Series	8 ... 9 mm / 0.33 in
	9 ... 10 mm / 0.37 in
Width	12 mm
Weight	51 g
EMC immunity of interference	acc. to EN 61000-6-2, marine applications
EMC emission of interference	acc. to EN 61000-6-4, marine applications

2-Channel Analog Input Module 0/4-20 mA

Single-ended (S.E.)

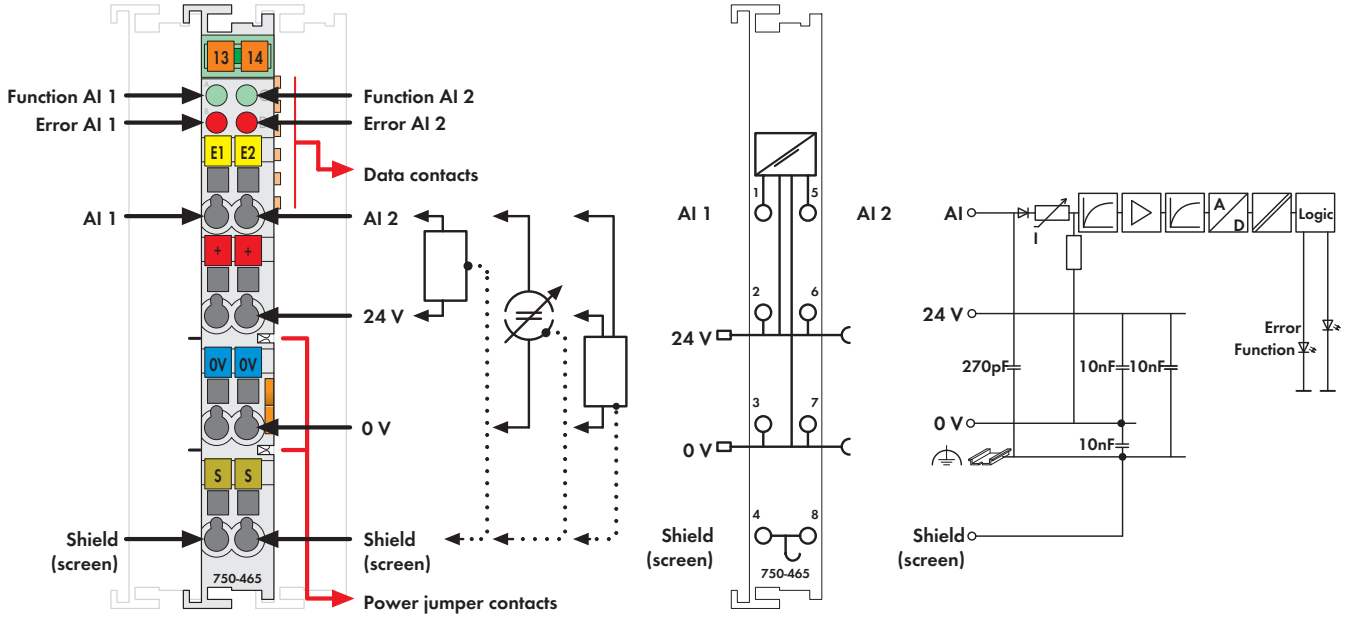

Fig. 750 Series
Delivered without miniature WSB markers

The analog input module provides power to the field device, receives the transmitted analog signals, and with electrical isolation, transmits them to the fieldbus.

The 24V supply for the field is derived from the power jumper contacts.

The shield (screen) is directly connected to the DIN rail.

This input module can supply the voltage for 2-conductor transducers.

Description	Item No.	Pack. Unit
2AI 0-20mA S.E.	**750-465**	1
2AI 4-20mA S.E.	**750-466**	1
2AI 0-20mA S.E./T	**750-465/025-000**	1
Extended temperature range: -20 °C ... +60 °C		
2AI 4-20mA S.E./EM	**750-466/000-003**	1
2AI 4-20mA S.E. S5 [1]	**750-466/000-200**	1
2AI 4-20mA S.E./T	**750-466/025-000**	1
Extended temperature range: -20 °C ... +60 °C		
2AI 0-20mA S.E. (without connector)	**753-465**	1
2AI 4-20mA S.E. (without connector)	**753-466**	1

[1] Data format for S5 control with FB 251

Accessories

	Item No.	Pack. Unit
753 Series Connectors	**753-110**	25
Coding elements	**753-150**	100
Miniature WSB Quick marking system		
plain	**248-501**	5
with marking	see Section 11	

Approvals

Conformity marking	CE
Korea Certification	[1]
UL 508	
ANSI/ISA 12.12.01	Class I, Div. 2, Grp. ABCD, T4
TÜV 07 ATEX 554086 X	I M2 Ex d I Mb, II 3 G Ex nA IIC T4 Gc, II 3 D Ex tc IIIC T135°C Dc
IECEx TUN 09.0001 X	Ex d I Mb, Ex nA IIC T4 Gc, Ex tc IIIC T135°C Dc

[1] Does not apply to 750-466/000-003

Technical Data

Number of inputs	2
Power supply	via system voltage DC/DC
Current consumption (internal)	75 mA
Input voltage (max.)	10V
Signal current	0 - 20mA (750-465 / 753-465)
	4 - 20mA (750-466 / 753-466)
	3.8 mA ... 20.5 mA (750-466/000-003)
Input resistance	< 220 Ω / 20 mA
Resolution	12 bits
Conversion time (typ.)	2 ms
Measuring error (25 °C)	< ± 0.2 % of the full scale value
Temperature coefficient	< ± 0.01 % / K of the full scale value
Isolation	500 V system/supply
Bit width	2 x 16 bits data
	2 x 8 bits control/status (optional)
Wire connection	CAGE CLAMP®
Cross sections	0.08 mm² ... 2.5 mm² / AWG 28 ... 14
Strip lengths, 750/753 Series	8 ... 9 mm / 0.33 in
	9 ... 10 mm / 0.37 in
Width	12 mm
Weight	36.2 g
EMC immunity of interference	acc. to EN 61000-6-2
EMC emission of interference	acc. to EN 61000-6-4

2-Channel Analog Input Module 0/4-20 mA

Single-ended (S.E.), short-circuit protected

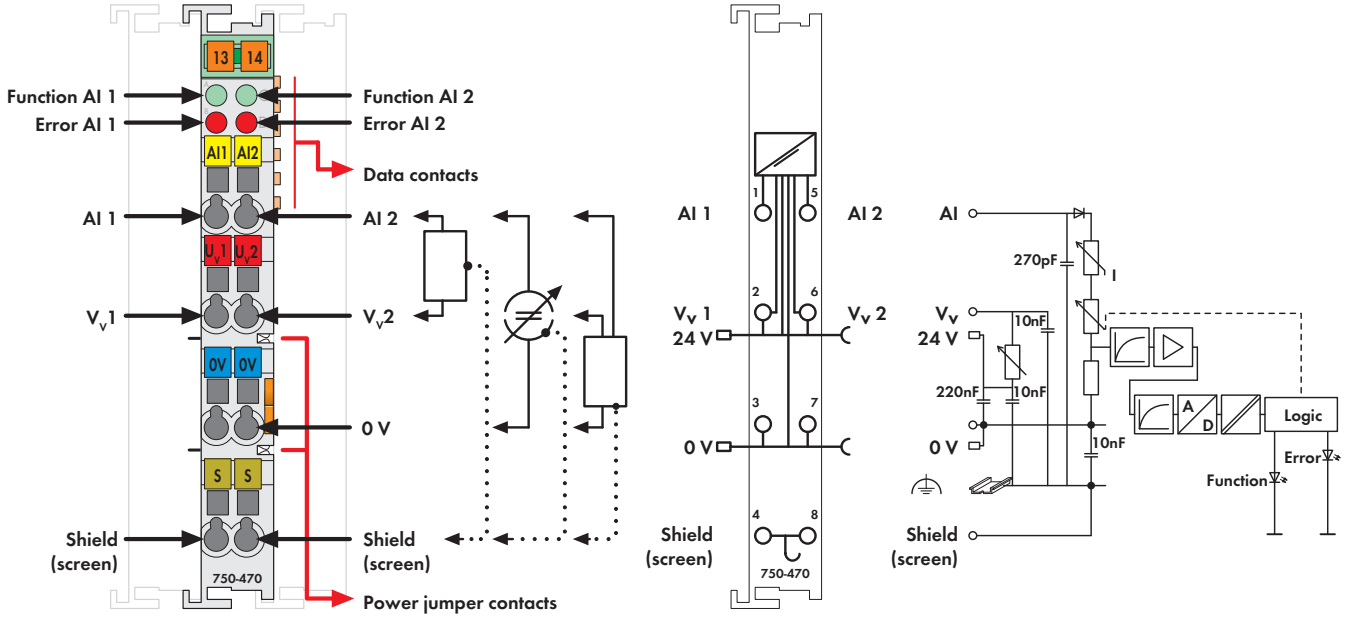

Delivered without miniature WSB markers

The analog input module receives signals with the standardized values 0-20mA and 4-20mA. The output signal is electrically isolated and will transmit with a 12-bit resolution.

The 24V supply for the field is derived from the power jumper contacts.

The shield (screen) is directly connected to the DIN rail.

This module can supply the voltage for 2-conductor transducers.

A short-circuit to the power supply is indicated as error/fieldbus failure and a message is sent to the supervisory control.

Description	Item No.	Pack. Unit
2AI 0-20mA, S.E., S. C. Protec.	**750-470**	1
2AI 0-20mA, S.-E., S. C. Protec., 60 Hz	**750-470/005-000**	1
2AI 4-20mA, S.-E., S.C.Protec.	**750-473**	1
2AI 4-20mA, S.-E., S. C. Protec., 60 Hz	**750-473/005-000**	1

Accessories		Item No.	Pack. Unit
Miniature WSB Quick marking system			
	plain	**248-501**	5
	with marking	see Section 11	

Approvals

Conformity marking	CE
Korea Certification	
Marine applications (versions upon request)	ABS, BV, DNV, GL, KR, LR, NKK, PRS, RINA
UL 508	
ANSI/ISA 12.12.01	Class I, Div. 2, Grp. ABCD, T4
TÜV 07 ATEX 554086 X	I M2 Ex d I Mb,
	II 3 G Ex nA IIC T4 Gc,
	II 3 D Ex tc IIIC T135°C Dc
IECEx TUN 09.0001 X	Ex d I Mb,
	Ex nA IIC T4 Gc,
	Ex tc IIIC T135°C Dc

Technical Data

Number of inputs	2
Power supply	via system voltage DC/DC
Current consumption typ. (internal)	100 mA
Signal current	0 - 20mA (750-470)
	4 - 20mA (750-473)
Input voltage	non-linear, overload protected
	V = 1.2 V + 100 Ω x I meas.
Input resistance (typ.)	< 160 Ω / 20 mA
Resolution	12 bits
Conversion time (typ.)	80 ms
Measuring error (25 °C)	< ± 0.1 % of the full scale value
Temperature coefficient	< ± 0.01 % / K of the full scale value
Isolation	500 V field/system
Bit width	2 x 16 bits data
	2 x 8 bits control/status (optional)
Input filter	50Hz (750-470, 750-473)
	60Hz (750-470/005-000,
	750-473/005-000)
Noise rejection at sampling frequency	< -100 dB
Noise rejection above sampling frequency	< -40 dB
Wire connection	CAGE CLAMP®
Cross sections	0.08 mm² ... 2.5 mm² / AWG 28 ... 14
Strip lengths	8 ... 9 mm / 0.33 in
Width	12 mm
Weight	55.5 g
EMC immunity of interference	acc. to EN 61000-6-2, marine applications
EMC emission of interference	acc. to EN 61000-6-3, marine applications

2-Channel Analog Input Module 0/4-20 mA

Single-ended (S.E.)

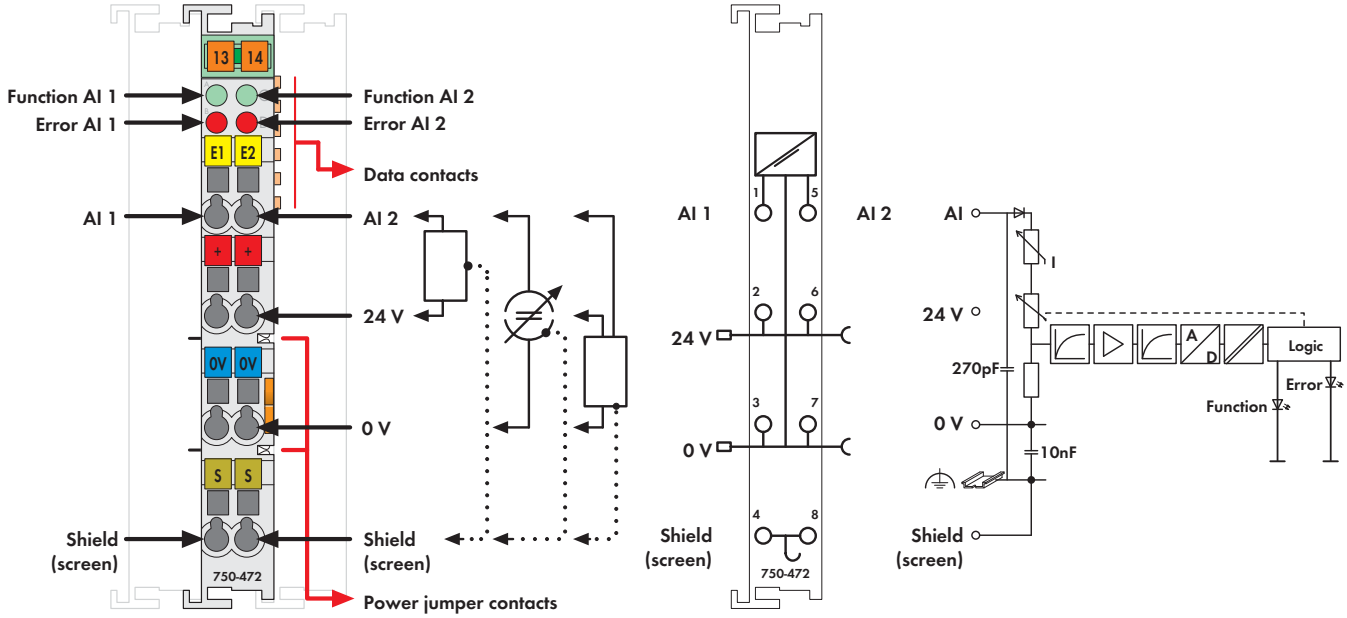

Fig. 750 Series
Delivered without miniature WSB markers

The analog input module is able to provide power to the field device, to receive the transmitted analog signals, and with electrical isolation, to transmit them to the fieldbus.

The 24V supply for the field is derived from the power jumper contacts.

The shield (screen) is directly connected to the DIN rail.

At approx. 25mA the overload protection switches the measurement input to a high resistance state. Under normal operating conditions it is automatically switched back.

This input module can supply the voltage for 2-conductor transducers.

Description	Item No.	Pack. Unit
2AI 0-20mA 16 Bit S.E.	**750-472**	1
2AI 4-20mA 16 Bit S.E.	**750-474**	1
2AI 0-20mA 16 Bit S.E. S5 [1]	**750-472/000-200**	1
2AI 0-20mA 16 Bit S.E. 60Hz	**750-472/005-000**	1
2AI 4-20mA 16 Bit S.E. S5 [1]	**750-474/000-200**	1
2AI 4-20mA 16 Bit S.E. 60Hz	**750-474/005-000**	1
2AI 0-20mA 16 Bit, S.E. (without connector)	**753-472**	1
2AI 4-20mA 16 Bit, S.E. (without connector)	**753-474**	1

[1] Data format for S5 control with FB 251

Accessories	Item No.	Pack. Unit
753 Series Connectors	**753-110**	25
Coding elements	**753-150**	100
Miniature WSB Quick marking system		
plain	**248-501**	5
with marking	see Section 11	

Approvals

Conformity marking	CE
Korea Certification	KC
Marine applications (versions upon request)	ABS, BV, DNV, GL, KR, LR, NKK, PRS, RINA
cULus UL 508	
cULus ANSI/ISA 12.12.01	Class I, Div. 2, Grp. ABCD, T4
TÜV 12.1297 X (Brazil)	Ex nA IIC T4 Gc (750-472, -474)
TÜV 07 ATEX 554086 X	I M2 Ex d I Mb, II 3 G Ex nA IIC T4 Gc, II 3 D Ex tc IIIC T135°C Dc
IECEx TUN 09.0001 X	Ex d I Mb, Ex nA IIC T4 Gc, Ex tc IIIC T135°C Dc

Technical Data

Number of inputs	2
Power supply	via system voltage DC/DC
Current consumption (internal)	75 mA
Input voltage (max.)	24V
Input voltage	non-linear, overload protected V = 1.2 V + 100 Ω x I meas.
Signal current	0 - 20mA (750-472 / 753-472) 4 - 20mA (750-474 / 753-474)
Input resistance	220 Ω / 20 mA
Overvoltage protection	30 V polarity reversal protection
Resolution	15 bits
Conversion time (typ.)	80 ms
Input filter	50Hz
Noise rejection at sampling frequency	< -100 dB
Noise rejection above sampling frequency	< -40 dB
Measuring error (25 °C)	< ± 0.1 % of the full scale value
Temperature coefficient	< ± 0.01 % / K of the full scale value
Isolation	500 V system/supply
Bit width	2 x 16 bits data 2 x 8 bits control/status (optional)
Wire connection	CAGE CLAMP®
Cross sections	0.08 mm² ... 2.5 mm² / AWG 28 ... 14
Strip lengths, 750/753 Series	8 ... 9 mm / 0.33 in 9 ... 10 mm / 0.37 in
Width	12 mm
Weight	55.5 g
EMC immunity of interference	acc. to EN 61000-6-2, marine applications
EMC emission of interference	acc. to EN 61000-6-4, marine applications

2-Channel Analog Input Module 0-20 mA

Differential inputs

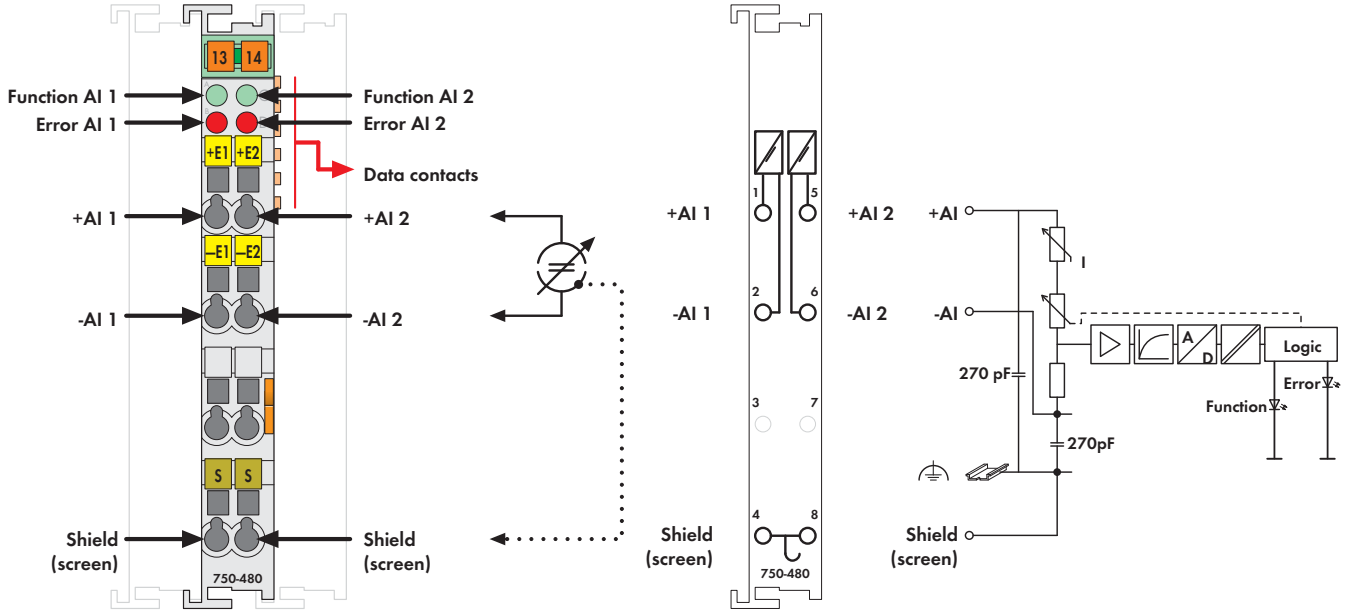

Fig. 750 Series
Delivered without miniature WSB markers

The analog input module receives differential signals of values 0 - 20mA.
The input signal of each channel is electrically isolated and will be transmitted with a resolution of 13 bits.
The system supply (via the data bus contacts) is used for the power supply of the module.
The shield (screen) is directly connected to the DIN rail.

- Measured-value acquisition: time synchronous (both inputs)
- Overrange / measuring range underflow: status byte and LED
- Method of conversion: SAR (Successive Approximation Register)
- Operating mode: continuously sampling (preset)
- Protection: non-linear limiting

Technical data for the 750-480/000-001 model:

- Measured-value acquisition time synchronous (in connection with synchronized sampling of the slave, 750-303 Fieldbus Coupler (as from version 0101))
- Overrange / measuring range underflow status byte, status bits, measured value and LED (min./max. limiting values can also be set according to customers' specifications)
- Sampling delay (instruction/conversion) < 50µs
- Operating mode triggered

Description	Item No.	Pack. Unit
2AI 0-20mA Differential Input	**750-480**	1
2AI 0-20mA Differential Input Synchronous	**750-480/000-001**	1
Differing technical data see text		
2AI 0-20mA Differential Input (without connector)	**753-480**	1

Accessories	Item No.	Pack. Unit
753 Series Connectors	**753-110**	25
Coding elements	**753-150**	100
Miniature WSB Quick marking system		
plain	**248-501**	5
with marking	see Section 11	

Approvals

Conformity marking	CE
Korea Certification	
UL 508	
ANSI/ISA 12.12.01	Class I, Div. 2, Grp. ABCD, T4
TÜV 12.1297 X (Brazil)	Ex nA IIC T4 Gc (750-480)
TÜV 07 ATEX 554086 X	I M2 Ex d I Mb, II 3 G Ex nA IIC T4 Gc, II 3 D Ex tc IIIC T135°C Dc
IECEx TUN 09.0001 X	Ex d I Mb, Ex nA IIC T4 Gc, Ex tc IIIC T135°C Dc

Technical Data

Number of inputs	2, electrically isolated from each other
Power supply	via system voltage DC/DC
Current consumption typ. (internal)	80 mA
Signal current	0 ... 20 mA
Input resistance	< 270 Ω / 20 mA
Input filter	low pass first order, f_G = 5 kHz
Resolution of the A/D converter	14 bits
Monotonicy without missing codes	yes
Resolution of measured value	13 bits
Value of a LSB (least significant bit)	2.4 µA
Measuring error (25 °C)	< ± 0.05 % of the full scale value
Temperature coefficient	< ± 0.01 % / K of the full scale value
Measuring error	≤ 0.4 % over whole temperature range
	≤ 0.1 % of upper range value (non-linearity)
Crosstalk attenuation	≥ 80 dB
Sampling time of repetition	1 ms
Sampling delay (module)	1 ms
Sampling delay (channel/channel)	≤ 1 µs
Sampling duration	≤ 5 µs
Admissible continuous overload	30 V
Dielectric strength	500 V DC channel/channel or channel/system
Bit width	2 x 16 bits data 2 x 8 bits control/status (optional)
Wire connection	CAGE CLAMP®
Cross sections	0.08 mm² ... 2.5 mm² / AWG 28 ... 14
Strip lengths, 750/753 Series	8 ... 9 mm / 0.33 in 9 ... 10 mm / 0.37 in
Width	12 mm
Weight	51 g
EMC immunity of interference	acc. to EN 61000-6-2
EMC emission of interference	acc. to EN 61000-6-4

2-Channel Analog Input Module 4-20 mA

Isolated differential inputs

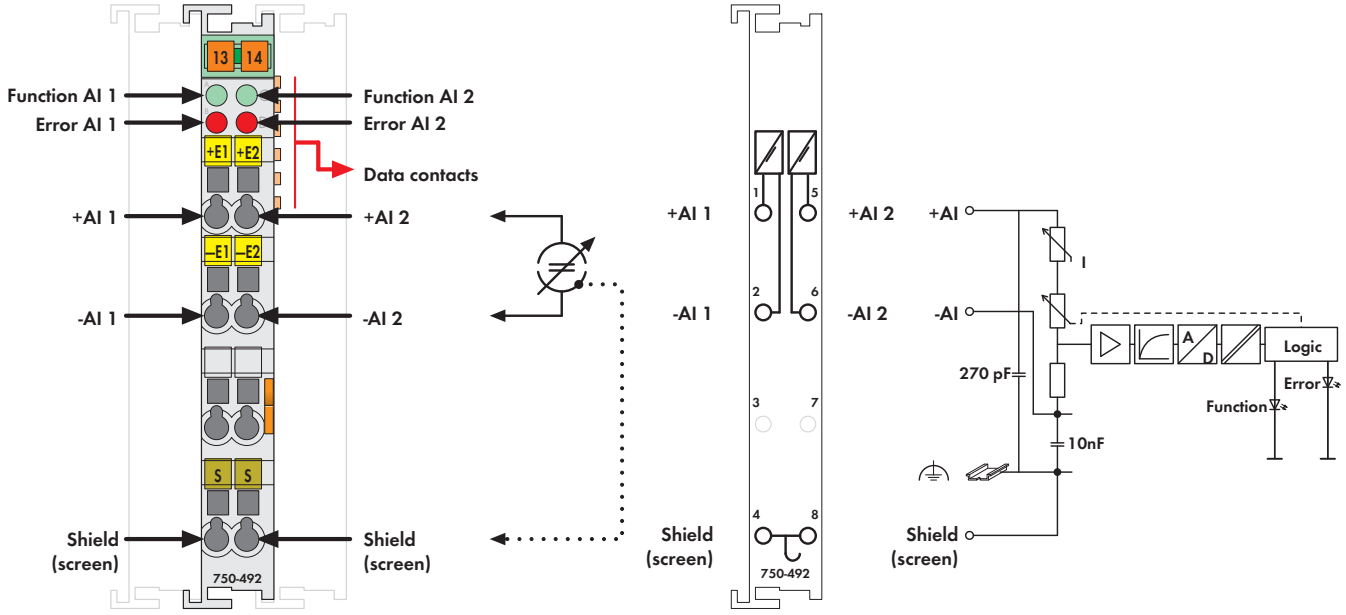

Fig. 750 Series
Delivered without miniature WSB markers

The analog input module receives differential signals of values 4 - 20mA.

The input signal of each channel is electrically isolated and will be transmitted with a resolution of 13 bits.

The system supply (via the data bus contacts) is used for the power supply of the module.

The shield (screen) is directly connected to the DIN rail.

- Measured-value acquisition: time synchronous (both inputs)
- Overrange / measuring range underflow: status byte and LED
- Method of conversion: SAR (Successive Approximation Register)
- Operating mode: continuously sampling (preset)
- Protection: non-linear limiting

Description	Item No.	Pack. Unit
2AI 4-20mA Differential Input	**750-492**	1
2AI 4-20mA Differential Input (without connector)	**753-492**	1

Accessories

	Item No.	Pack. Unit
753 Series Connectors	**753-110**	25
Coding elements	**753-150**	100
Miniature WSB Quick marking system		
plain	**248-501**	5
with marking	see Section 11	

Approvals

Conformity marking	CE
Korea Certification	
UL 508	
ANSI/ISA 12.12.01	Class I, Div. 2, Grp. ABCD, T4
TÜV 12.1297 X (Brazil)	Ex nA IIC T4 Gc (750-492)
TÜV 07 ATEX 554086 X	I M2 Ex d I Mb, II 3 G Ex nA IIC T4 Gc, II 3 D Ex tc IIIC T135°C Dc
IECEx TUN 09.0001 X	Ex d I Mb, Ex nA IIC T4 Gc, Ex tc IIIC T135°C Dc

Technical Data

Number of inputs	2, electrically isolated from each other
Power supply	via system voltage DC/DC
Current consumption typ. (internal)	80 mA
Signal current	4 ... 20 mA
Input resistance	< 270 Ω / 20 mA
Input filter	low pass first order, f_G = 5 kHz
Resolution of the A/D converter	14 bits
Monotonicy without missing codes	yes
Resolution of measured value	13 bits
Value of a LSB (least significant bit)	2.4 µA
Measuring error (25 °C)	< ± 0.05 % of the full scale value
Temperature coefficient	< ± 0.01 % / K of the full scale value
Measuring error	< 0.4 % over whole temperature scale
	≤ 0.1 % of upper range value (non-linearity)
Crosstalk attenuation	≥ 80 dB
Sampling time of repetition	1 ms
Sampling delay (module)	1 ms
Sampling delay (channel/channel)	≤ 1 µs
Sampling duration	≤ 5 µs
Admissible continuous overload	30 V
Dielectric strength	500 V DC channel/channel or
	channel/system
Bit width	2 x 16 bits data
	2 x 8 bits control/status (optional)
Wire connection	CAGE CLAMP®
Cross sections	0.08 mm² ... 2.5 mm² / AWG 28 ... 14
Strip lengths, 750/753 Series	8 ... 9 mm / 0.33 in
	9 ... 10 mm / 0.37 in
Width	12 mm
Weight	54 g
EMC immunity of interference	acc. to EN 61000-6-2
EMC emission of interference	acc. to EN 61000-6-4

2-Channel Analog Input Module 4-20 mA HART

Single-ended (S.E.)

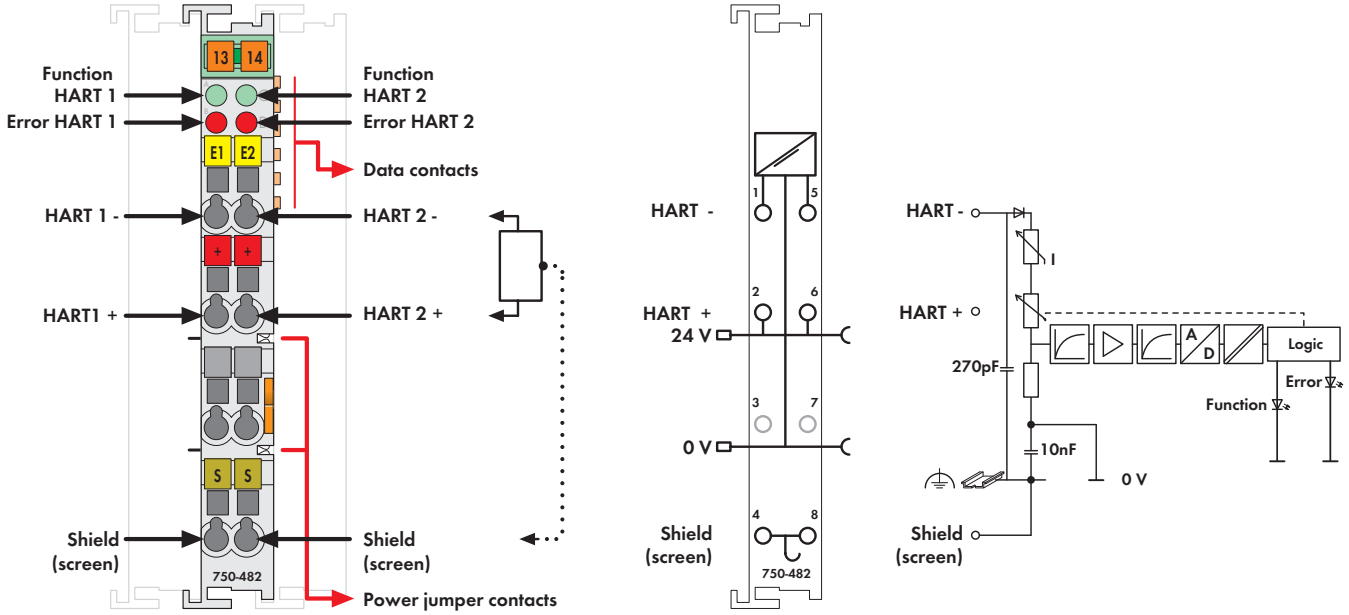

Fig. 750 Series
Delivered without miniature WSB markers

The analog input module powers the transducers, receives transmitted analog signals, and with electrical isolation, transmits the signals to the fieldbus. The 24V supply for the field is derived from the module's power jumper contacts. The shield (screen) is directly connected to the DIN rail. At approx. 25mA, the overload protection will switch the measurement input to a high resistance state. Under normal operating conditions it will automatically switch back. This input module can supply the voltage for 2-conductor transducers.

Up to 4 HART secondary variables (PV, SV, TV, QV) per channel can be mapped in the cyclic process image of the coupler or controller (configurable). For HART communication with connected intelligent HART field devices, the HART protocol can be mapped in the cyclic process image of the coupler or controller (configurable).
When using the 750-333 PROFIBUS DP/V1 Coupler and 759-360 PROFIBUS/HART Gateway DTM, FDT routing is possible to the DTM of the connected HART device.

Description	Item No.	Pack. Unit
2AI 4-20mA 12 Bit S.E. HART	**750-482**	1
2AI 4-20mA 12 Bit S.E. HART S7[1]	**750-482/000-300**	1
[1] Data format for S7 control		
2AI 4-20mA 12 Bit S.E. HART/T	**750-482/025-000**	1
Extended temperature range: -20 °C ... +60 °C		
2AI 4-20mA 12 Bit S.E. HART (without connector)	**753-482**	1

Accessories	Item No.	Pack. Unit
PROFIBUS/HART Gateway DTM	**759-360**	1
MODBUS TCP/HART Gateway DTM	**759-359**	1
753 Series Connectors	**753-110**	25
Coding elements	**753-150**	100
Miniature WSB Quick marking system		
plain	**248-501**	5
with marking	see Section 11	

Approvals

Conformity marking	CE
Korea Certification	[1]
UL 508	
ANSI/ISA 12.12.01	Class I, Div. 2, Grp. ABCD, T4
TÜV 07 ATEX 554086 X	I M2 Ex d I Mb,
	II 3 G Ex nA IIC T4 Gc,
	II 3 D Ex tc IIIC T135°C Dc
IECEx TUN 09.0001 X	Ex d I Mb,
	Ex nA IIC T4 Gc,
	Ex tc IIIC T135°C Dc

[1] Does not apply to 750-482/000-300

Technical Data

Number of inputs	2
Power supply	via system voltage DC/DC,
	~10 mA without sensor supply
Current consumption (internal)	< 65mA
Input voltage (max.)	24 V
Input voltage drop	(I_{meas} < 28 mA): not linear,
	as protected against overload
	U = 0.9 V + 270 Ω x I meas
Signal current	4 mA ... 20 mA
Line break detection	I meas < 3.10 mA
Short circuit detection	I meas > 22 mA
Overvoltage protection	30 V, reverse polarity protected
Conversion time (typ.)	10 ms
Input filter	parametrizable
Resolution of the A/D converter	12 bits
Measuring error (25 °C)	0.1 % of upper range value (non-linearity)
Temperature coefficient	< ± 0.01 % / K of full scale value
Isolation	500 V system/supply
Bit width	2 x 2 bytes data
	2 x 2 bytes data + 2n x 4 bytes data
	(n = number of dynamic variables)
	2 x 2 bytes data + 6 bytes mailbox
Diagnostics	Wire break, measuring range overflow
Sensor connection	2-wire
HART devices per channel	1 device (single-drop, no multi-drop)
HART modems per channel	1 modem (no multiplex)
Wire connection	CAGE CLAMP®
Cross sections	0.08 mm² ... 2.5 mm² / AWG 28 ... 14
Strip lengths, 750/753 Series	8 ... 9 mm / 0.33 in
	9 ... 10 mm / 0.37 in
Width	12 mm
Weight	53 g
EMC immunity of interference	acc. to EN 61000-6-2
EMC emission of interference	acc. to EN 61000-6-3

4-Channel Analog Input Module 0/4-20 mA

Single-ended (S.E.)

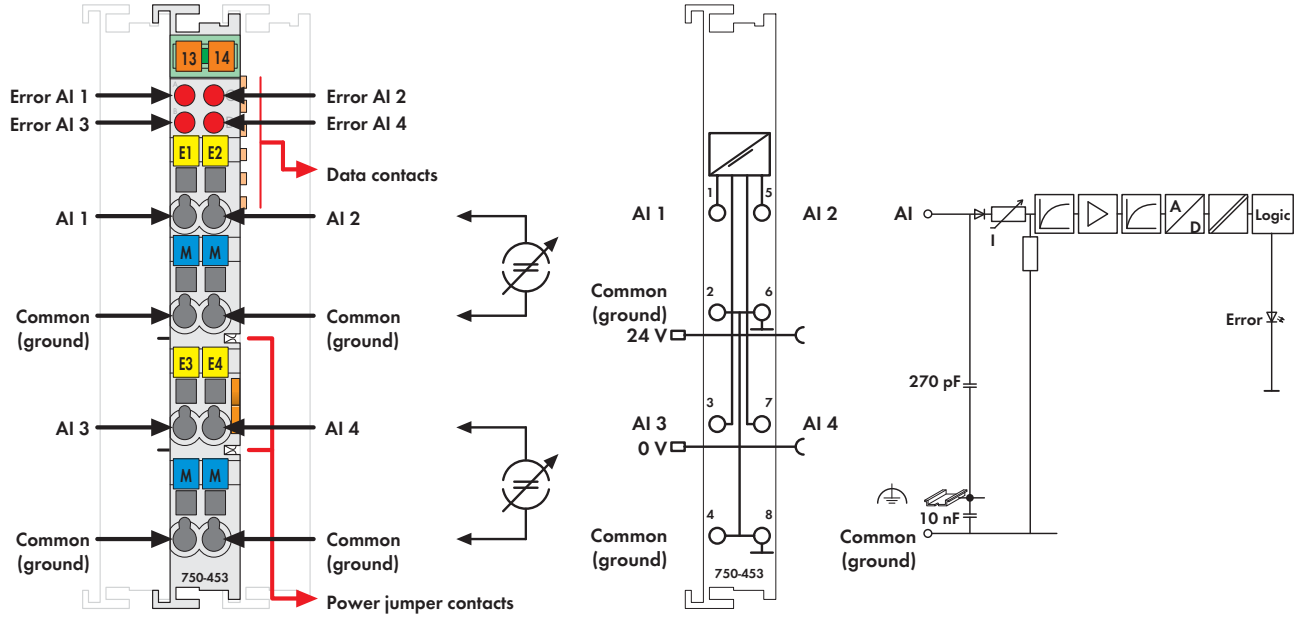

Fig. 750 Series
Delivered without miniature WSB markers

The analog input module receives signals with standardized values of 0-20mA and 4-20mA.

The input signal is electrically isolated and will be transmitted with a resolution of 12 bits.

The internal system supply is used for the power supply of the module.

The input channels of the module have one common ground potential.

Description	Item No.	Pack. Unit
4AI 0-20mA S.E.	**750-453**	1
4AI 4-20mA S.E.	**750-455**	1
4AI 4-20mA S.E./T	**750-455/025-000**	1
Extended temperature range: -20 °C ... +60 °C		
4AI 0-20mA S.E. (without connector)	**753-453**	1
4AI 4-20mA S.E. (without connector)	**753-455**	1

Accessories

	Item No.	Pack. Unit
753 Series Connectors	**753-110**	25
Coding elements	**753-150**	100
Miniature WSB Quick marking system		
plain	**248-501**	5
with marking	see Section 11	

Approvals

Conformity marking	CE
Korea Certification	
Marine applications (versions upon request)	ABS, BV, DNV, GL, KR, LR, NKK, PRS, RINA
cULus UL 508	
cULus ANSI/ISA 12.12.01	Class I, Div. 2, Grp. ABCD, T4
TÜV 07 ATEX 554086 X	I M2 Ex d I Mb, II 3 G Ex nA IIC T4 Gc, II 3 D Ex tc IIIC T135°C Dc
IECEx TUN 09.0001 X	Ex d I Mb, Ex nA IIC T4 Gc, Ex tc IIIC T135°C Dc

Technical Data

Number of inputs	4
Power supply	via system voltage DC/DC
Current consumption (internal)	65 mA
Input voltage (max.)	32V
Signal current	0 - 20mA (750-453 / 753-453) 4 - 20mA (750-455 / 753-455)
Input resistance	< 100 Ω / 20 mA
Resolution	12 bits
Conversion time (typ.)	10 ms
Measuring error (25 °C)	< ± 0.2 % of the full scale value
Temperature coefficient	< ± 0.01 % / K of the full scale value
Isolation	500 V system/supply
Bit width	4 x 16 bits data 4 x 8 bits control/status (optional)
Wire connection	CAGE CLAMP®
Cross sections	0.08 mm² ... 2.5 mm² / AWG 28 ... 14
Strip lengths, 750/753 Series	8 ... 9 mm / 0.33 in 9 ... 10 mm / 0.37 in
Width	12 mm
Weight	51 g
EMC immunity of interference	acc. to EN 61000-6-2, marine applications
EMC emission of interference	acc. to EN 61000-6-4, marine applications

2-Channel Analog Input Module 0-1 A AC/DC

Differential inputs

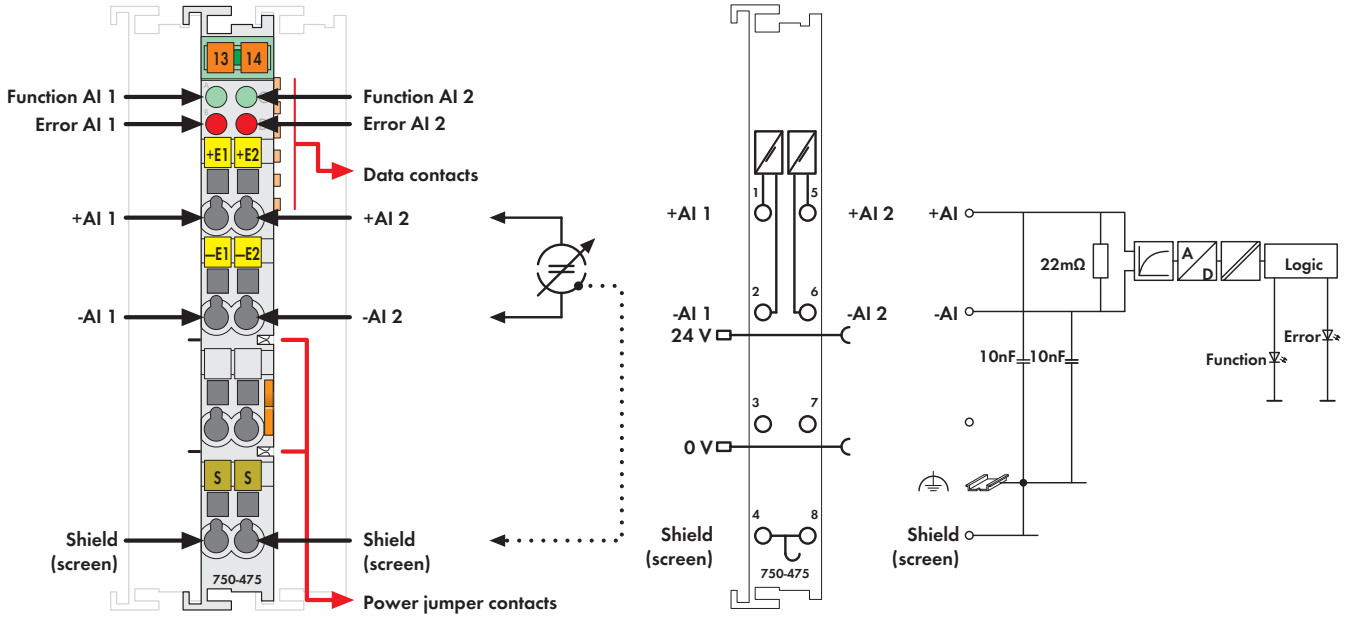

Fig. 750 Series
Delivered without miniature WSB markers

The analog input module receives AC and DC currents of values 0-1A eff.
The module measures the rms value of the current and displays it with a resolution of 100µA.
The maximum current must not exceed 2A.
The differential inputs are electrically isolated.
The fieldside and internal system are electrically isolated.

The internal system supply (via the data bus contacts) is used for the power supply of the module.
The input channels are differential inputs.
The shield (screen) is directly connected to the DIN rail.

Technical data for the 750-475/020-000 model:
Signal current: 0A ... 6A eff
Process data: 0.0 A is 0x0000; 6.0 A is 0x7FFF

Description	Item No.	Pack. Unit
2AI 0-1A AC/DC Differential Input	**750-475**	1
2AI 0-5A AC/DC Differential Input	**750-475/020-000**	1
Differing technical data see text		
2AI 0-1A AC/DC Differential Input	**753-475**	1
(without connector)		

Accessories	Item No.	Pack. Unit
753 Series Connectors	**753-110**	25
Coding elements	**753-150**	100
Miniature WSB Quick marking system		
plain	**248-501**	5
with marking	see Section 11	

Approvals

Conformity marking	CE
Korea Certification	
Marine applications (versions upon request)	ABS, BV, DNV, GL, KR, LR, NKK, PRS, RINA
UL 508	
ANSI/ISA 12.12.01	Class I, Div. 2, Grp. ABCD, T4
TÜV 12.1297 X (Brazil)	Ex nA IIC T4 Gc (750-475)
TÜV 07 ATEX 554086 X	I M2 Ex d I Mb, II 3 G Ex nA IIC T4 Gc, II 3 D Ex tc IIIC T135°C Dc
IECEx TUN 09.0001 X	Ex d I Mb, Ex nA IIC T4 Gc, Ex tc IIIC T135°C Dc

Technical Data

Number of inputs	2
Power supply	via system voltage DC/DC
Current consumption (internal)	80 mA
Input voltage (max.)	24V AC/DC (-20% ... +20%)
Signal current	0 A ... 1 A eff. (peak value 2.0 A)
Load impedance	22 mΩ
Resolution	16 bits internal (1 LSB = 100 µA)
Conversion time	200 ms
Measuring error (25 °C)	< ± 0.1 % of the full scale value
Temperature coefficient	< ± 110 ppm / K of the full scale value
Error in complete temperature range	≤ ± 0.6 % of the full scale value
Dielectric strength	500 V DC channel/channel or channel/system
Voltage via power jumper contacts	24 V DC
Bit width	2 x 16 bits data 2 x 8 bits control/status (optional)
Process data	0.0 A is 0x0000; 2.0 A DC is 0x4E20
Wire connection	CAGE CLAMP®
Cross sections	0.08 mm² ... 2.5 mm² / AWG 28 ... 14
Strip lengths, 750/753 Series	8 ... 9 mm / 0.33 in 9 ... 10 mm / 0.37 in
Width	12 mm
Weight	47 g
EMC immunity of interference	acc. to EN 61000-6-2, marine applications
EMC emission of interference	acc. to EN 61000-6-4, marine applications

2-Channel Analog Input Module ±10 V

Differential inputs

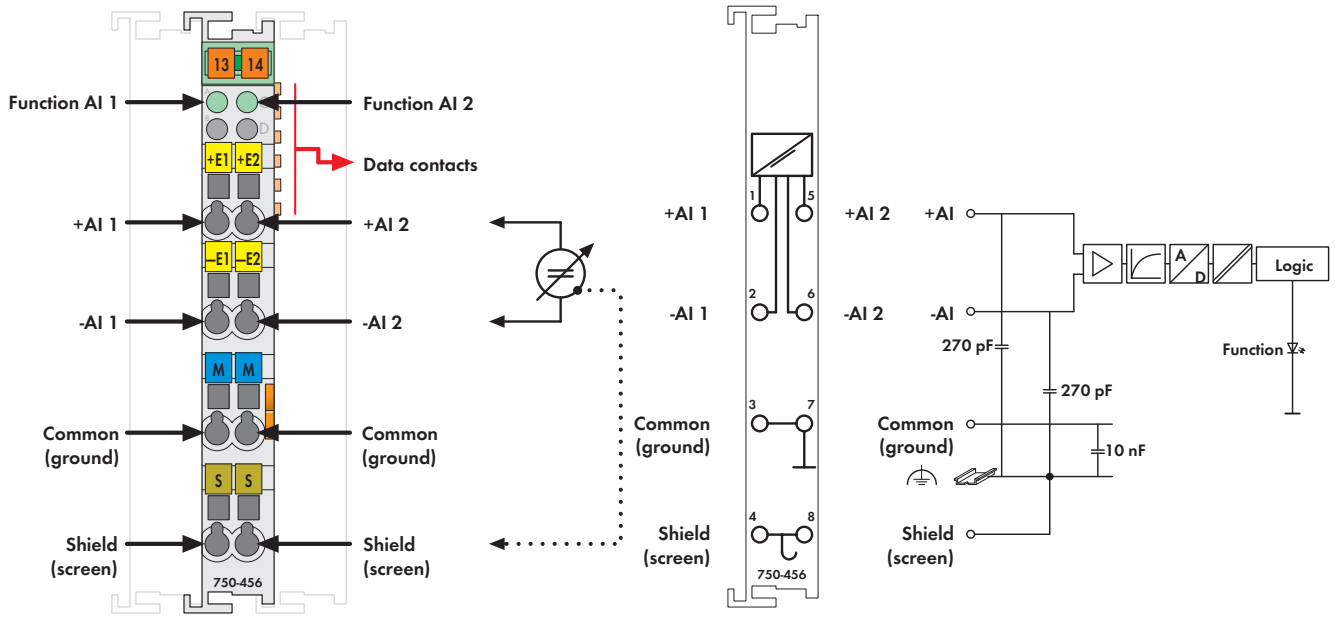

Fig. 750 Series
Delivered without miniature WSB markers

This analog input module receives signals with standardized values of ±10V.

The input signal is electrically isolated and will transmitt with a resolution of 12 bits.

The internal system supply (via the data bus contacts) is used for the power supply of the module.

The input channels are differential inputs.

The shield (screen) is directly connected to the DIN rail.

Description	Item No.	Pack. Unit
2AI ±10V DC	**750-456**	1
2AI ±10V DC S5 [1]	**750-456/000-200**	1
2AI ±10V DC (without connector)	**753-456**	1

[1] Data format for S5 control with FB 251

Accessories		Item No.	Pack. Unit
	753 Series Connectors	**753-110**	25
	Coding elements	**753-150**	100
	Miniature WSB Quick marking system		
	plain	**248-501**	5
	with marking	see Section 11	

Approvals

Conformity marking	CE
Korea Certification	
Marine applications (versions upon request)	ABS, BV, DNV, GL, KR, LR, NKK, PRS, RINA
cULus UL 508	
cULus ANSI/ISA 12.12.01	Class I, Div. 2, Grp. ABCD, T4
TÜV 07 ATEX 554086 X	I M2 Ex d I Mb,
	II 3 G Ex nA IIC T4 Gc,
	II 3 D Ex tc IIIC T135°C Dc
IECEx TUN 09.0001 X	Ex d I Mb,
	Ex nA IIC T4 Gc,
	Ex tc IIIC T135°C Dc

Technical Data

Number of inputs	2
Power supply	via system voltage DC/DC
Current consumption typ. (internal)	80 mA
Common mode voltage (max.)	35V
Signal voltage	± 10 V
Internal resistance	typ. 570 kΩ
Resolution	12 bits
Conversion time (typ.)	2 ms
Measuring error (25 °C)	< ± 0.2 % of the full scale value
Temperature coefficient	< ± 0.015 % / K of the full scale value
Isolation	500 V system/supply
Bit width	2 x 16 bits data
	2 x 8 bits control/status (optional)
Wire connection	CAGE CLAMP®
Cross sections	0.08 mm² ... 2.5 mm² / AWG 28 ... 14
Strip lengths, 750/753 Series	8 ... 9 mm / 0.33 in
	9 ... 10 mm / 0.37 in
Width	12 mm
Weight	53.5 g
EMC immunity of interference	acc. to EN 61000-6-2, marine applications
EMC emission of interference	acc. to EN 61000-6-4, marine applications

2-Channel Analog Input Module ±10 V

Differential measurement input

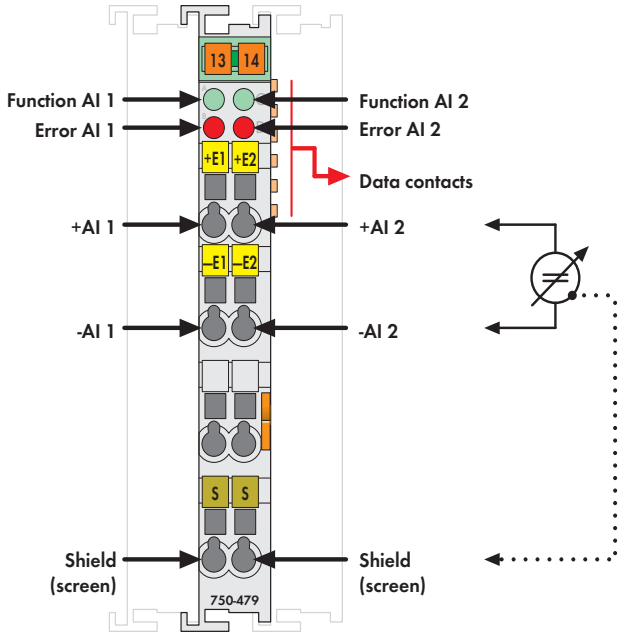

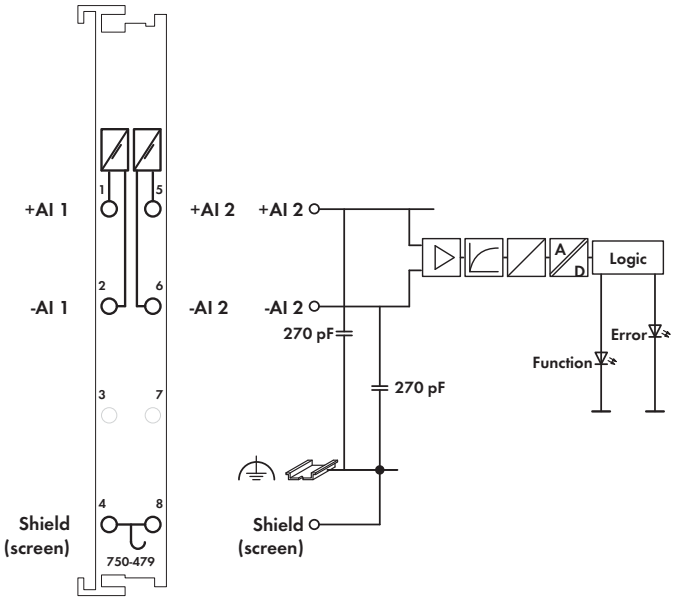

Fig. 750 Series
Delivered without miniature WSB markers

The analog input module receives differential signals of values ± 10VDC.
The input signal of each channel is electrically isolated and will be transmitted with a resolution of 13 bits.
The system supply (via the data bus contacts) is used for the power supply of the module.
The shield (screen) is directly connected to the DIN rail.

- Measured-value acquisition: time synchronous (both inputs)
- Overrange / measuring range underflow: status byte and LED
- Method of conversion: SAR (Successive Approximation Register)
- Operating mode: continuously sampling (preset)
- Protection: RC circuit

Technical data for the 750-479/000-001 model:

- Measured-value acquisition time synchronous (in connection with synchronized sampling of the slave, 750-303 Fieldbus Coupler (as from version 0101))
- Overrange / measuring range underflow status byte, status bits, measured value and LED (min./max. limiting values can also be set according to customers' specifications)
- Sampling delay (instruction/conversion) < 50µs
- Operating mode triggered

Description	Item No.	Pack. Unit
2AI ±10V DC Diff. Measur. Inp.	**750-479**	1
2AI ±10V DC Differential Input Synchronous	**750-479/000-001**	1
Differing technical data see text		
2AI ±10V DC Differential Input (without connector)	**753-479**	1

Accessories	Item No.	Pack. Unit
753 Series Connectors	**753-110**	25
Coding elements	**753-150**	100
Miniature WSB Quick marking system		
plain	**248-501**	5
with marking	see Section 11	

Approvals

Conformity marking	CE
Korea Certification	
Marine applications (versions upon request)	ABS, BV, DNV, GL, KR, LR, NKK, PRS, RINA
UL 508	
ANSI/ISA 12.12.01	Class I, Div. 2, Grp. ABCD, T4
TÜV 12.1297 X (Brazil)	Ex nA IIC T4 Gc (750-479)
TÜV 07 ATEX 554086 X	I M2 Ex d I Mb, II 3 G Ex nA IIC T4 Gc, II 3 D Ex tc IIIC T135°C Dc
IECEx TUN 09.0001 X	Ex d I Mb, Ex nA IIC T4 Gc, Ex tc IIIC T135°C Dc

Technical Data

Number of inputs	2, electrically isolated from each other
Power supply	via system voltage DC/DC
Current consumption (internal)	100 mA
Signal voltage	± 10 V
Internal resistance	1 MΩ
Input filter	low pass first order, f_G = 5 kHz
Resolution of the A/D converter	14 bits
Monotonicy without missing codes	yes
Resolution of measured value	13 bits + sign bit
Value of a LSB (least significant bit)	1.2 mV
Measuring error (25 °C)	≤ ± 0.05 % of the full scale value
Temperature coefficient	< ± 0.01 % / K of the full scale value
Measuring error	≤ 0.4 % over whole temperature scale
	≤ 0.1 % of upper range value (non-linearity)
Crosstalk attenuation	≥ 80 dB
Sampling time of repetition	1 ms
Sampling delay (module)	1 ms
Sampling delay (channel/channel)	≤ 1 µs
Sampling duration	≤ 5 µs
Admissible continuous overload	60 V
Dielectric strength	500 V DC channel/channel or channel/system
Bit width	2 x 16 bits data
	2 x 8 bits control/status (optional)
Wire connection	CAGE CLAMP®
Cross sections	0.08 mm² ... 2.5 mm² / AWG 28 ... 14
Strip lengths, 750/753 Series	8 ... 9 mm / 0.33 in
	9 ... 10 mm / 0.37 in
Width	12 mm
Weight	54.5 g
EMC immunity of interference	acc. to EN 61000-6-2, marine applications
EMC emission of interference	acc. to EN 61000-6-4, marine applications

2-Channel Analog Input Module ±10 V/0-10 V

Single-ended (S.E.)

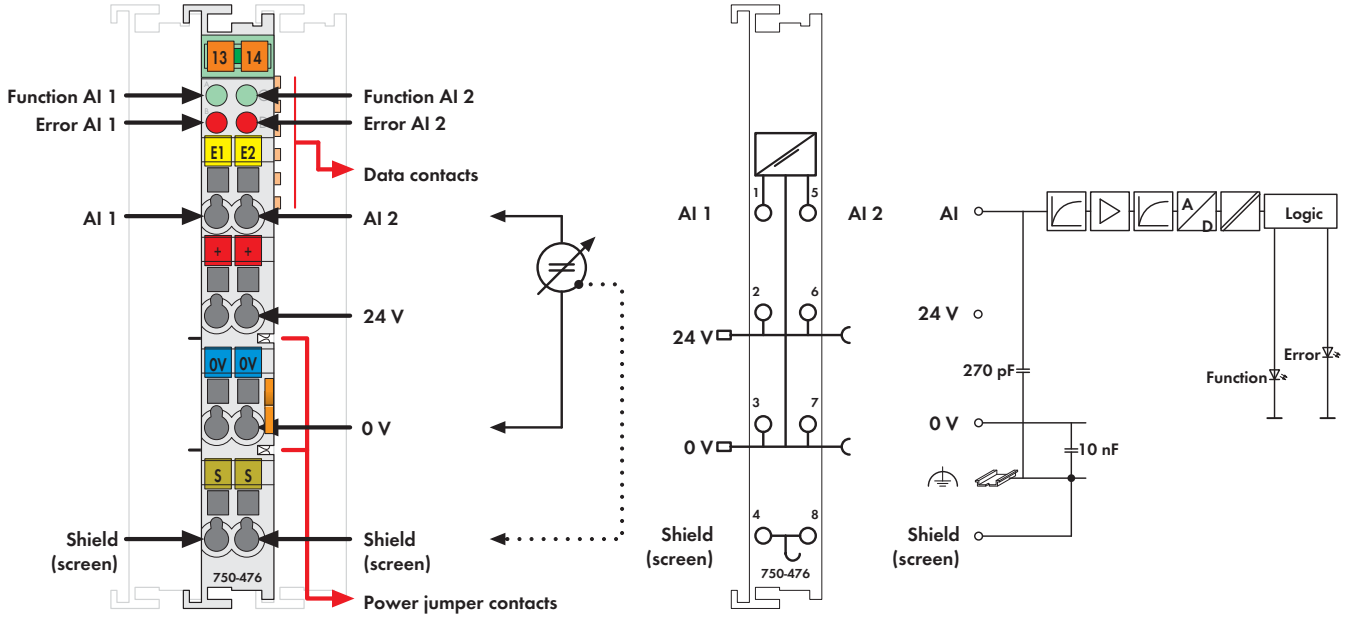

Fig. 750 Series
Delivered without miniature WSB markers

The analog input module receives signals with the standardized values 0-10V or ± 10V.

The input signal is electrically isolated and will be transmitted with a resolution of 16 bits.

The internal system voltage supply is used for the power supply of the module.

The input channels of a module have one common ground potential.

The 24V supply is derived from the power jumper contacts.

The shield (screen) is directly connected to the DIN rail.

Description	Item No.	Pack. Unit
2AI ±10V DC 16 Bit S.E.	**750-476**	1
2AI ±10V DC 16 Bit S.E. 60Hz S5-466	**750-476/000-200**	1
2AI 0-10V DC 16 Bit S.E.	**750-478**	1
2AI 0-10V DC 16 Bit S.E. 60Hz	**750-478/005-000**	1
2AI ±10V DC 16 Bit S.E. (without connector)	**753-476**	1
2AI 0-10V DC 16 Bit S.E. (without connector)	**753-478**	1

Accessories		Item No.	Pack. Unit
	753 Series Connectors	**753-110**	25
	Coding elements	**753-150**	100
	Miniature WSB Quick marking system		
	plain	**248-501**	5
	with marking	see Section 11	

Approvals

Conformity marking	CE
Korea Certification	
Marine applications (versions upon request)	ABS, BV, DNV, GL, KR, LR, NKK, PRS, RINA
cULus UL 508	
cULus ANSI/ISA 12.12.01	Class I, Div. 2, Grp. ABCD, T4
TÜV 12.1297 X (Brazil)	Ex nA IIC T4 Gc (750-476, -478)
TÜV 07 ATEX 554086 X	I M2 Ex d I Mb, II 3 G Ex nA IIC T4 Gc, II 3 D Ex tc IIIC T135°C Dc
IECEx TUN 09.0001 X	Ex d I Mb, Ex nA IIC T4 Gc, Ex tc IIIC T135°C Dc

Technical Data

Number of inputs	2
Power supply	via system voltage DC/DC
Current consumption (internal)	75 mA
Input voltage (max.)	24V
Signal voltage	± 10V (750-476 / 753-476) 0 - 10V (750-478 / 753-478)
Internal resistance	130 kΩ
Resolution	15 bits + sign bit
Conversion time (typ.)	80 ms
Input filter	50 Hz
Noise rejection at sampling frequency	< -100 dB
Noise rejection above sampling frequency	< -40 dB
Measuring error (25 °C)	≤ ± 0.1 % of the full scale value
Temperature coefficient	< ± 0.01 % / K of the full scale value
Isolation	500 V system/supply
Bit width	2 x 16 bits data 2 x 8 bits control/status (optional)
Wire connection	CAGE CLAMP®
Cross sections	0.08 mm² ... 2.5 mm² / AWG 28 ... 14
Strip lengths, 750/753 Series	8 ... 9 mm / 0.33 in 9 ... 10 mm / 0.37 in
Width	12 mm
Weight	52.7 g
EMC immunity of interference	acc. to EN 61000-6-2, marine applications
EMC emission of interference	acc. to EN 61000-6-4, marine applications

2-Channel Analog Input Module 0-10 V AC/DC

Differential inputs

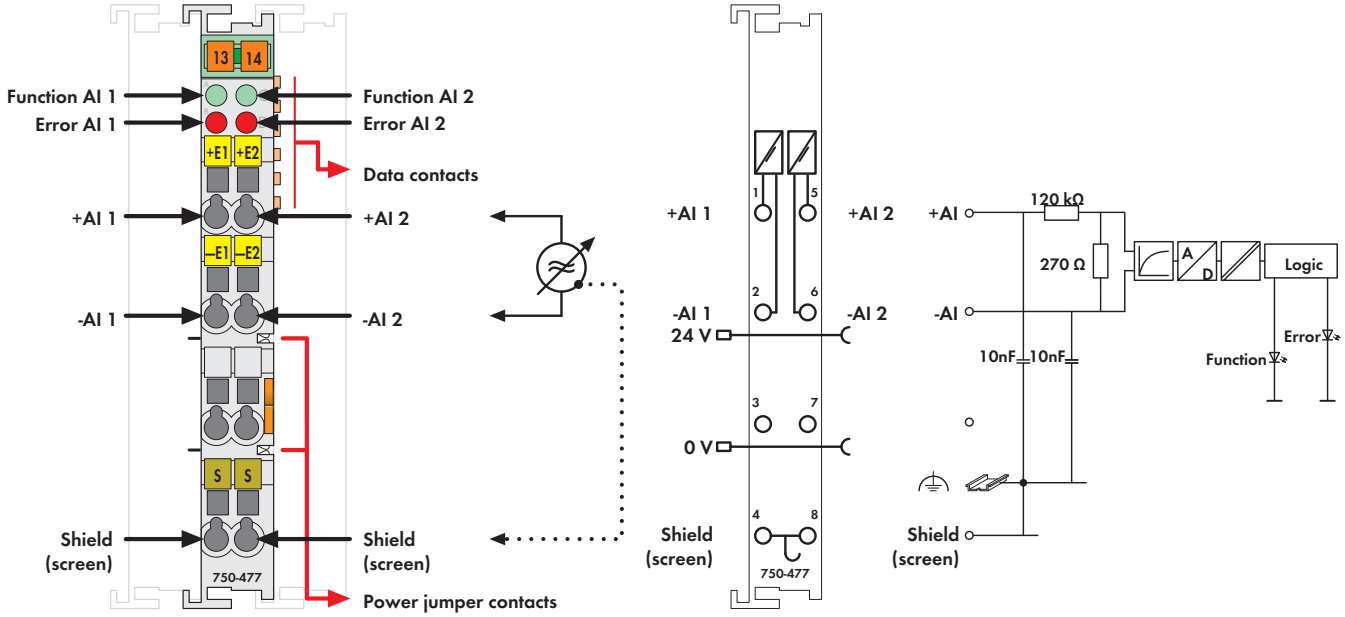

Fig. 750 Series
Delivered without miniature WSB markers

The analog input module receives AC and DC voltages of values 0-10V eff.

The module measures the rms value of the voltage and displays it with a resolution of 1mV.

The maximum voltage must not exceed 20V.

The differential inputs are electrically isolated.

The fieldside and internal system are electrically isolated.

The system supply (via the data bus contacts) is used for the power supply of the module.

The input channels are differential inputs.

The shield (screen) is directly connected to the DIN rail.

Description	Item No.	Pack. Unit
2AI 0-10V AC/DC Differential Input	**750-477**	1
2AI 0-10V AC/DC Diff. (without connector)	**753-477**	1

Accessories	Item No.	Pack. Unit
753 Series Connectors	**753-110**	25
Coding elements	**753-150**	100
Miniature WSB Quick marking system		
plain	**248-501**	5
with marking	see Section 11	

Approvals

Conformity marking	CE
Korea Certification	
UL 508	
ANSI/ISA 12.12.01	Class I, Div. 2, Grp. ABCD, T4
TÜV 07 ATEX 554086 X	I M2 Ex d I Mb, II 3 G Ex nA IIC T4 Gc, II 3 D Ex tc IIIC T135°C Dc
IECEx TUN 09.0001 X	Ex d I Mb, Ex nA IIC T4 Gc, Ex tc IIIC T135°C Dc

Technical Data

Number of inputs	2
Power supply	via system voltage DC/DC
Current consumption (internal)	80 mA
Signal voltage	0 V ... 10 V eff. (peak value 20 V)
Internal resistance	120 kΩ
Resolution	16 bits internal (1 LSB = 1 mV)
Conversion time	200 ms
Measuring error (25 °C)	< ± 0.1 % of the full scale value
Temperature coefficient	< ± 110 ppm / K of the full scale value
Error in complete temperature range	≤ ± 0.6 % of the full scale value
Dielectric strength	500 V DC channel/channel or channel/system
Voltage via power jumper contacts	24 V DC
Bit width	2 x 16 bits data
	2 x 8 bits control/status (optional)
Process data	0.0 V is 0x0000; 20 V DC is 0x4E20
Wire connection	CAGE CLAMP®
Cross sections	0.08 mm² ... 2.5 mm² / AWG 28 ... 14
Strip lengths, 750/753 Series	8 ... 9 mm / 0.33 in
	9 ... 10 mm / 0.37 in
Width	12 mm
Weight	50.3 g
EMC immunity of interference	acc. to EN 61000-6-2
EMC emission of interference	acc. to EN 61000-6-4

2-Channel Analog Input Module 0-10 V

Single-ended (S.E.)

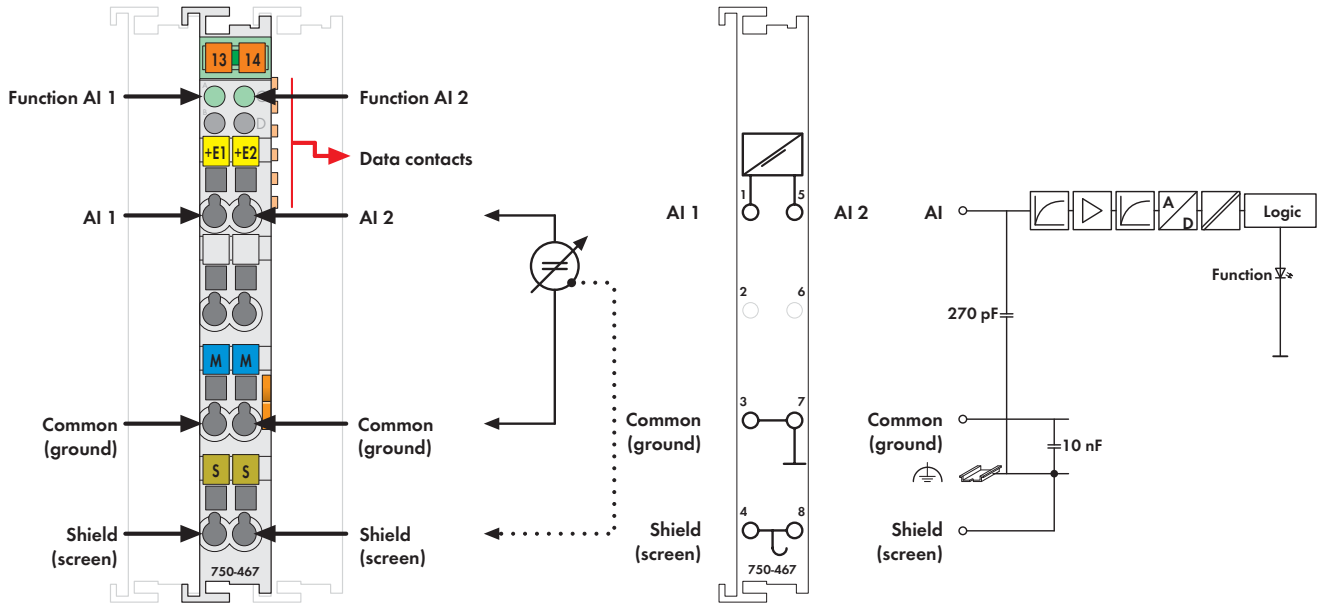

Fig. 750 Series
Delivered without miniature WSB markers

The analog input module receives signals with the standardized values of 0-10V.

The input signal is electrically isolated and will be transmitted with a resolution of 12 bits.

The internal system supply is used for the power supply of the module.

The input channels of a module have one common ground potential.

The shield (screen) is directly connected to the DIN rail.

Description	Item No.	Pack. Unit
2AI 0-10V DC S.E.	**750-467**	1
2AI 0-10V DC S.E. S5 [1]	**750-467/000-200**	1
2AI 0-10V DC S.E. (without connector)	**753-467**	1

[1] Data format for S5 control with FB 251

Accessories

	Item No.	Pack. Unit
753 Series Connectors	**753-110**	25
Coding elements	**753-150**	100
Miniature WSB Quick marking system		
plain	**248-501**	5
with marking	see Section 11	

Approvals

Conformity marking	CE
Korea Certification	
UL 508	
ANSI/ISA 12.12.01	Class I, Div. 2, Grp. ABCD, T4
TÜV 07 ATEX 554086 X	I M2 Ex d I Mb, II 3 G Ex nA IIC T4 Gc, II 3 D Ex tc IIIC T135°C Dc
IECEx TUN 09.0001 X	Ex d I Mb, Ex nA IIC T4 Gc, Ex tc IIIC T135°C Dc

Technical Data

Number of inputs	2
Power supply	via system voltage DC/DC
Current consumption typ. (internal)	60 mA
Input voltage (max.)	35 V
Signal voltage	0 ... 10 V
Internal resistance	130 kΩ
Resolution	12 bits
Conversion time (typ.)	2 ms
Measuring error (25 °C)	≤ ± 0.2 % of the full scale value
Temperature coefficient	< ± 0.01 % / K of the full scale value
Isolation	500 V system/supply
Bit width	2 x 16 bits data
	2 x 8 bits control/status (optional)
Wire connection	CAGE CLAMP®
Cross sections	0.08 mm² ... 2.5 mm² / AWG 28 ... 14
Strip lengths, 750/753 Series	8 ... 9 mm / 0.33 in
	9 ... 10 mm / 0.37 in
Width	12 mm
Weight	48.5 g
EMC immunity of interference	acc. to EN 61000-6-2
EMC emission of interference	acc. to EN 61000-6-4

4-Channel Analog Input Module 0-10 V

Single-ended (S.E.)

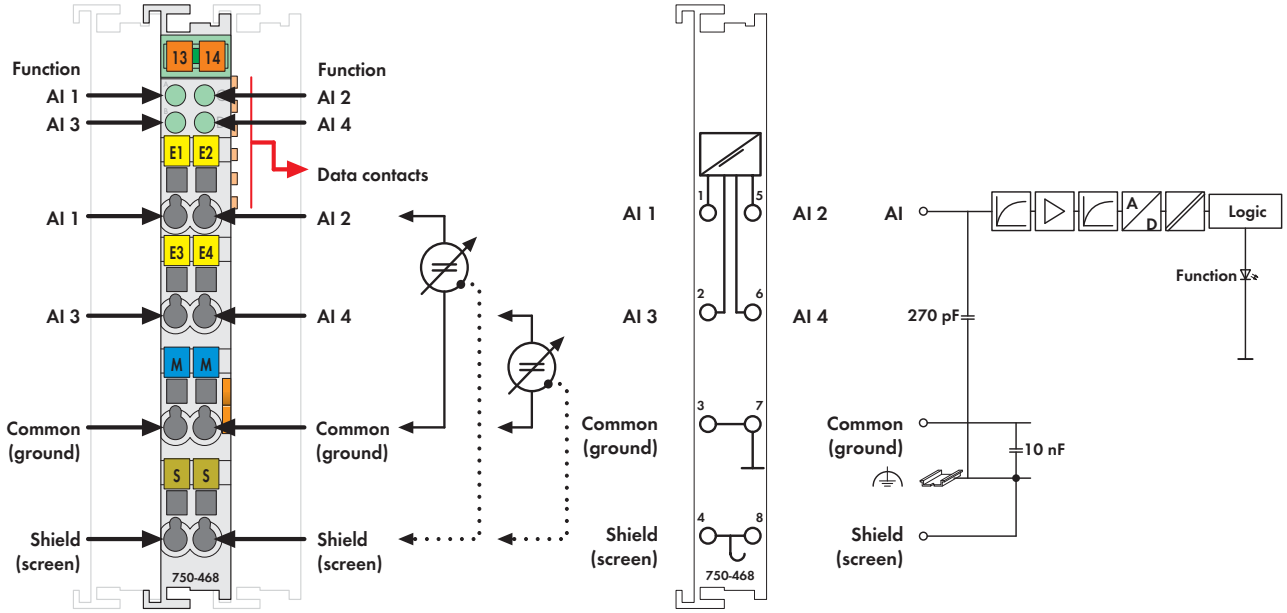

Delivered without miniature WSB markers

The analog input module receives signals with the standardized values of 0-10V.
The input signal is electrically isolated and will be transmitted with a resolution of 12 bits.
The internal system voltage supply is used for the power supply of the module.
The input channels of a module have one common ground potential.
The shield (screen) is directly connected to the DIN rail.

Description	Item No.	Pack. Unit
4AI 0-10V DC S.E.	**750-468**	1
4AI 0-10V DC S.E. S5 [1]	**750-468/000-200**	1
4AI 0-10V DC S.E./T	**750-468/025-000**	1
Extended temperature range: -20 °C ... +60 °C		

[1] Data format for S5 control with FB 251

Accessories	Item No.	Pack. Unit
Miniature WSB Quick marking system		
plain	**248-501**	5
with marking	see Section 11	

Approvals

Conformity marking	CE
Korea Certification	
Marine applications (versions upon request)	ABS, BV, DNV, GL, KR, LR, PRS, RINA
UL 508	
ANSI/ISA 12.12.01	Class I, Div. 2, Grp. ABCD, T4
TÜV 07 ATEX 554086 X	I M2 Ex d I Mb,
	II 3 G Ex nA IIC T4 Gc,
	II 3 D Ex tc IIIC T135°C Dc
IECEx TUN 09.0001 X	Ex d I Mb,
	Ex nA IIC T4 Gc,
	Ex tc IIIC T135°C Dc

Technical Data

Number of inputs	4
Power supply	via system voltage DC/DC
Current consumption typ. (internal)	60 mA
Input voltage (max.)	35 V
Signal voltage	0 ... 10 V
Internal resistance	133 kΩ
Resolution	12 bits
Conversion time (typ.)	4 ms
Measuring error (25 °C)	≤ ± 0.2 % of the full scale value
Temperature coefficient	< ± 0.01 % / K of the full scale value
Isolation	500 V system/supply
Bit width	4 x 16 bits data
	4 x 8 bits control/status (optional)
Wire connection	CAGE CLAMP®
Cross sections	0.08 mm² ... 2.5 mm² / AWG 28 ... 14
Strip lengths	8 ... 9 mm / 0.33 in
Width	12 mm
Weight	52.5 g
EMC immunity of interference	acc. to EN 61000-6-2, marine applications
EMC emission of interference	acc. to EN 61000-6-4, marine applications

4-Channel Analog Input Module ±10 V/0-10 V

Single-ended (S.E.)

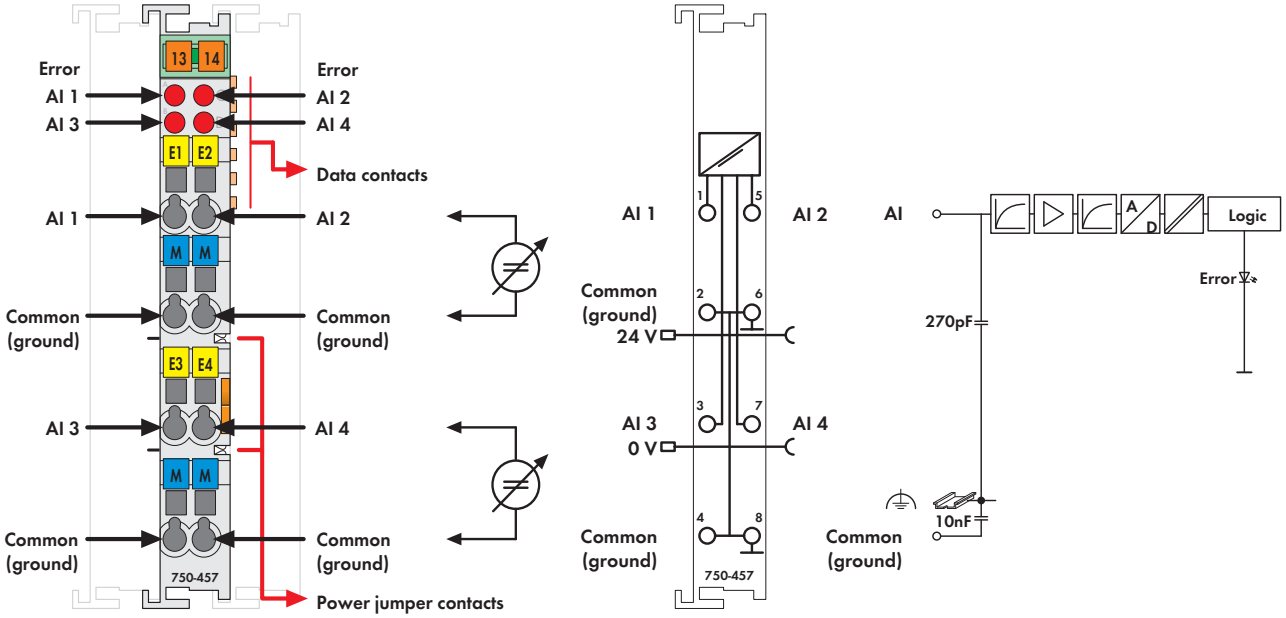

Fig. 750 Series
Delivered without miniature WSB markers

The analog input module receives signals with the standardized values ±10V and 0-10V.

The input signal is electrically isolated and will be transmitted with a resolution of 12 bits.

The internal system supply is used for the power supply of the module.

The input channels of a module have one common ground potential.

Description	Item No.	Pack. Unit
4AI ±10V DC S.E.	**750-457**	1
4AI 0-10V DC S.E.	**750-459**	1
4AI ±10V DC S.E./T	**750-457/025-000**	1
Extended temperature range: -20 °C ... +60 °C		
4AI ±10V DC S.E. (without connector)	**753-457**	1
4AI 0-10V DC S.E. (without connector)	**753-459**	1

Accessories		Item No.	Pack. Unit
	753 Series Connectors	**753-110**	25
	Coding elements	**753-150**	100
	Miniature WSB Quick marking system		
	plain	**248-501**	5
	with marking	see Section 11	

Approvals

Conformity marking	CE
Korea Certification	
Marine applications (versions upon request)	ABS, BV, DNV, GL, KR, LR, NKK, PRS, RINA
UL 508	
ANSI/ISA 12.12.01	Class I, Div. 2, Grp. ABCD, T4
TÜV 07 ATEX 554086 X	I M2 Ex d I Mb, II 3 G Ex nA IIC T4 Gc, II 3 D Ex tc IIIC T135°C Dc
IECEx TUN 09.0001 X	Ex d I Mb, Ex nA IIC T4 Gc, Ex tc IIIC T135°C Dc

Technical Data

Number of inputs	4
Power supply	via system voltage DC/DC
Current consumption (internal)	65 mA
Input voltage (max.)	± 40V
Signal voltage	± 10 V (750-457 / 753-457) 0 V ... 10 V (750-459 / 753-459)
Input resistance	> 100kΩ
Resolution	12 bits
Conversion time (typ.)	10 ms
Measuring error (25 °C)	< ± 0.2 % of the full scale value
Temperature coefficient	< ± 0.01 % / K of the full scale value
Isolation	500 V system/supply
Bit width	4 x 16 bits data 4 x 8 bits control/status (optional)
Wire connection	CAGE CLAMP®
Cross sections	0.08 mm² ... 2.5 mm² / AWG 28 ... 14
Strip lengths, 750/753 Series	8 ... 9 mm / 0.33 in 9 ... 10 mm / 0.37 in
Width	12 mm
Weight	51 g
EMC immunity of interference	acc. to EN 61000-6-2, marine applications
EMC emission of interference	acc. to EN 61000-6-4, marine applications

2-Channel Analog Input Module 0-30 V

Differential measurement input

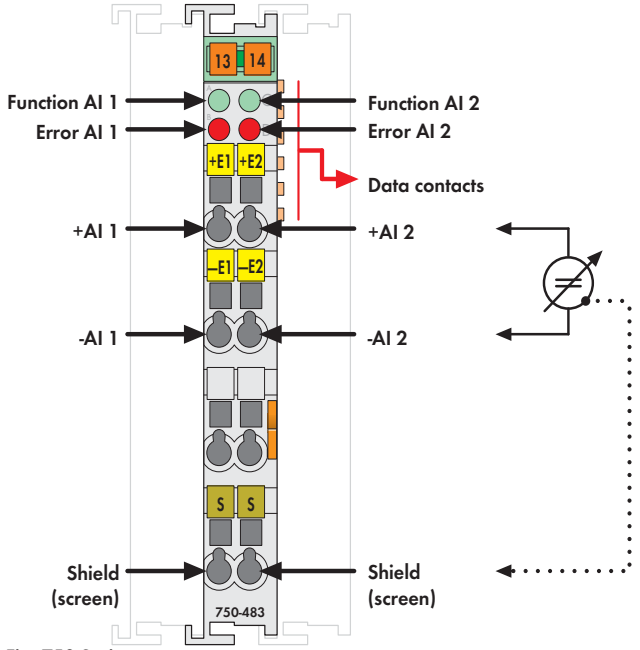

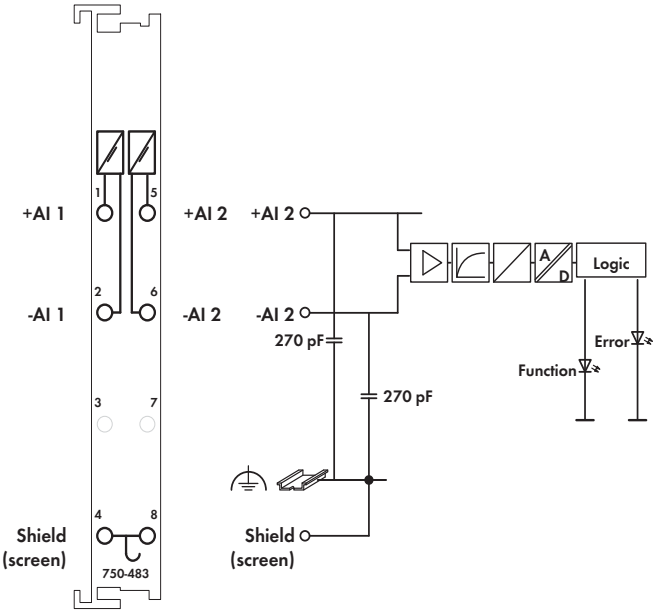

Fig. 750 Series
Delivered without miniature WSB markers

The analog input module receives differential signals of values ± 10VDC or 0-30V.

The input signal of each channel is electrically isolated and will be transmitted with a resolution of 14 bits.

The internal system supply (via the data bus contacts) is used for the power supply of the module.

The shield (screen) is directly connected to the DIN rail.

- Measured-value acquisition: time synchronous (both inputs)
- Overrange / measuring range underflow: status byte and LED
- Method of conversion: SAR (Successive Approximation Register)
- Operating mode: continuously sampling (preset)
- Protection: RC circuit

Description	Item No.	Pack. Unit
2AI 0-30V DC Diff. Measur. Inp.	**750-483**	1
2AI 0-30V DC Diff. Measur. Inp. (without connector)	**753-483**	1

Accessories

	Item No.	Pack. Unit
753 Series Connectors	**753-110**	25
Coding elements	**753-150**	100
Miniature WSB Quick marking system		
plain	**248-501**	5
with marking	see Section 11	

Approvals

Conformity marking	CE
Korea Certification	
Marine applications	ABS, BV, DNV, GL, KR, LR, NKK, PRS, RINA
UL 508	
ANSI/ISA 12.12.01	Class I, Div. 2, Grp. ABCD, T4
TÜV 07 ATEX 554086 X	I M2 Ex d I Mb, II 3 G Ex nA IIC T4 Gc, II 3 D Ex tc IIIC T135°C Dc
IECEx TUN 09.0001 X	Ex d I Mb, Ex nA IIC T4 Gc, Ex tc IIIC T135°C Dc

Technical Data

Number of inputs	2, electrically isolated from each other
Power supply	via system voltage DC/DC
Current consumption typ. (internal)	80 mA
Signal voltage	0 - 30V
Internal resistance	1 MΩ
Input filter	low pass first order, f_G = 5 kHz
Resolution of the A/D converter	14 bits
Monotonicy without missing codes	yes
Resolution of measured value	14 bits
Value of a LSB (least significant bit)	1.8 mV
Measuring error (25 °C)	≤ ± 0.05 % of the full scale value
Temperature coefficient	< ± 0.01 % / K of the full scale value
Measuring error	≤ 0.4 % over whole temperature scale
	≤ 0.1 % of upper range value (non-linearity)
Crosstalk attenuation	≥ 80 dB
Sampling time of repetition	1 ms
Sampling delay (module)	1 ms
Sampling delay (channel/channel)	≤ 1 µs
Sampling duration	≤ 5 µs
Admissible continuous overload	60 V
Dielectric strength	500 V DC channel/channel or channel/system
Bit width	2 x 16 bits data 2 x 8 bits control/status (optional)
Wire connection	CAGE CLAMP®
Cross sections	0.08 mm² ... 2.5 mm² / AWG 28 ... 14
Strip lengths, 750/753 Series	8 ... 9 mm / 0.33 in 9 ... 10 mm / 0.37 in
Width	12 mm
Weight	55 g
EMC immunity of interference	acc. to EN 61000-6-2, marine applications
EMC emission of interference	acc. to EN 61000-6-4, marine applications

2-Channel Analog Input Module for RTDs

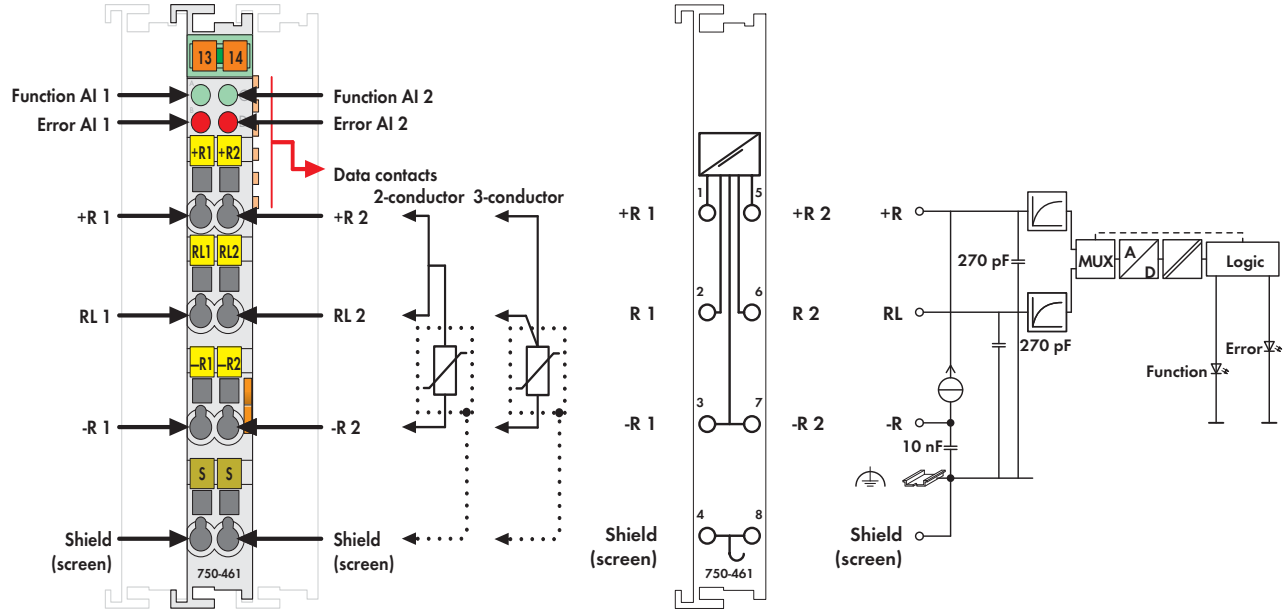

Fig. 750 Series
Delivered without miniature WSB markers

The RTD (resistive temperature device) input module directly connects Pt or Ni resistance sensors.
The connection of 2- or 3-conductor sensors is possible.
The module automatically linearizes the entire temperature range. A sensor error is indicated via red LED.
A green LED indicates readiness for operation and error-free communication with the buscoupler.
The shield (screen) is directly connected to the DIN rail.
All listed sensor types are supported by the configurable variation.
Set-up via WAGO-I/O-CHECK 2 software.

Other variations are available upon request:
Pt 100; Pt 200; Pt 500; Pt 1000; temperature range -200 °C ... + 850 °C;
Ni 100; Ni 100; temperature range -60 °C ... +250 °C and resistance measuring.
Technical data for the 750-461/020-000 model:

- Current consumption max (internal): 65 mA
- Sensor types: NTC 20 kOhm
- Temperature range: -30 °C ... +130 °C
- Measuring error: 0.5 K ... 3.0 K (dependent on temperature)
- Temperature coefficient: < +/- 0.002 %/K of full scale value
- Measured current typ.: 0.05 mA at 25 °C

Description	Item No.	Pack. Unit
2AI Pt 100/RTD	**750-461**	1
2AI Resistance Measur. 10R-1k2	**750-461/000-002**	1
2AI Pt 1000/RTD	**750-461/000-003**	1
2AI Ni 100/RTD	**750-461/000-004**	1
2AI Ni 1000 TK6180/ RTD	**750-461/000-005**	1
2AI Resistance Measur. 10R-5k0	**750-461/000-007**	1
2AI Ni 1000 TK5000/ RT	**750-461/000-009**	1
2AI Pt 100/RTD S5 [1]	**750-461/000-200**	1
2AI Pt 100/free configurable	**750-461/003-000**	1
2AI NTC 20k	**750-461/020-000**	1
Differing technical data see text		
2AI Pt 100/RTD/T	**750-461/025-000**	1
Extended temperature range: -20 °C ... +60 °C		
2AI Pt 100/RTD (without connector)	**753-461**	1
2AI Pt 100/free configurable (without connector)	**753-461/003-000**	1

[1] Data format for S5 control with FB 251

Approvals

Conformity marking	CE
Korea Certification	[1]
Marine applications (versions upon request)	ABS, BV, DNV, GL, KR, LR, NKK, PRS, RINA
cULus UL 508	
cULus ANSI/ISA 12.12.01	Class I, Div. 2, Grp. ABCD, T4
TÜV 07 ATEX 554086 X	I M2 Ex d I Mb, II 3 G Ex nA IIC T4 Gc, II 3 D Ex tc IIIC T135°C Dc
IECEx TUN 09.0001 X	Ex d I Mb, Ex nA IIC T4 Gc, Ex tc IIIC T135°C Dc

[1] Does not apply to 750-461/020-000

Technical Data

Number of inputs	2
Power supply	via system voltage DC/DC
Current consumption typ. (internal)	80 mA
Sensor types	Pt 100 (basic variation), optional variations
	available for Pt 200, Pt 500, Pt 1000,
	Ni 100, Ni 120, Ni 1000,
	resistance measuring
Sensor connection	3-wire connection (factory preset) or 2-wire
Temperature range	-200 °C ... + 850 °C (Pt)
	-60 °C ... +250 °C (Ni)
Resolution (over entire range)	0.1 °C
Conversion time	320 ms (per channel)
Response time (max.)	4 s
Measuring error (25 °C)	< ± 0.2 % of the full scale value
Temperature coefficient	< ± 0.01 % / K of the full scale value
Isolation	500 V system/supply
Measuring current (typ.)	0.5 mA
Bit width	2 x 16 bits data
	2 x 8 bits control/status (optional)
Wire connection	CAGE CLAMP®
Cross sections	0.08 mm² ... 2.5 mm² / AWG 28 ... 14
Strip lengths, 750/753 Series	8 ... 9 mm / 0.33 in
	9 ... 10 mm / 0.37 in
Width	12 mm
Weight	52.5 g
EMC immunity of interference	acc. to EN 61000-6-2, marine applications
EMC emission of interference	acc. to EN 61000-6-4, marine applications

Accessories

Accessories	Item No.	Pack. Unit
753 Series Connectors	**753-110**	25
Coding elements	**753-150**	100
Miniature WSB Quick marking system	see Section 11	

4-Channel Analog Input Module for RTDs

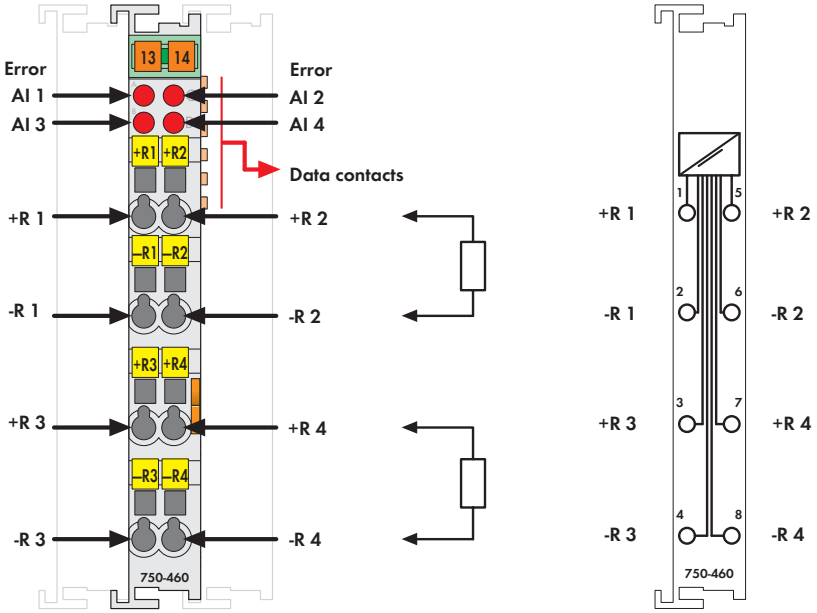

Delivered without miniature WSB markers

The RTD (resistive temperature device) input module allows the direct connection of Pt or Ni resistance sensors.

Only 2-conductor sensors can be connected.

The module automatically linearizes the entire temperature range.
A sensor error is indicated by a red LED.

Description	Item No.	Pack. Unit
4AI Pt 100/RTD	**750-460**	10[1]
4AI Pt 1000/RTD	**750-460/000-003**	1
4AI Ni 1000 TK6180/ RTD	**750-460/000-005**	1

[1] Also available individually

Accessories		Item No.	Pack. Unit
Miniature WSB Quick marking system			
	plain	**248-501**	5
	with marking	see Section 11	

Approvals

Conformity marking	CE
Korea Certification	
UL 508	

Technical Data

Number of inputs	4
Power supply	via system voltage DC/DC
Max. current consumption (internal)	65 mA
Sensor types	Pt 100 (basic variation), optional variations
	available for Pt 1000 and Ni 1000
Sensor connection	2-wire connection
Temperature range	-200 °C ... + 850 °C (Pt)
	-60 °C ... +250 °C (Ni)
Resolution (over entire range)	0.1 °C
Conversion time	250 ms
Measuring error (25 °C)	< ± 0.2 % of the full scale value
Temperature coefficient	< ± 0.01 % / K of full scale value
Isolation	500 V system/supply
Measuring current (typ.)	0.5 mA
Bit width	4 x 16 bits data
	4 x 8 bits control/status (optional)
Wire connection	CAGE CLAMP®
Cross sections	0.08 mm² ... 2.5 mm² / AWG 28 ... 14
Strip lengths	8 ... 9 mm / 0.33 in
Width	12 mm
Weight	51.5 g
EMC immunity of interference	acc. to EN 61000-6-2
EMC emission of interference	acc. to EN 61000-6-4

4-Channel Analog Input Module for Resistance Sensors Temperature Range: -30 °C … +150 °C

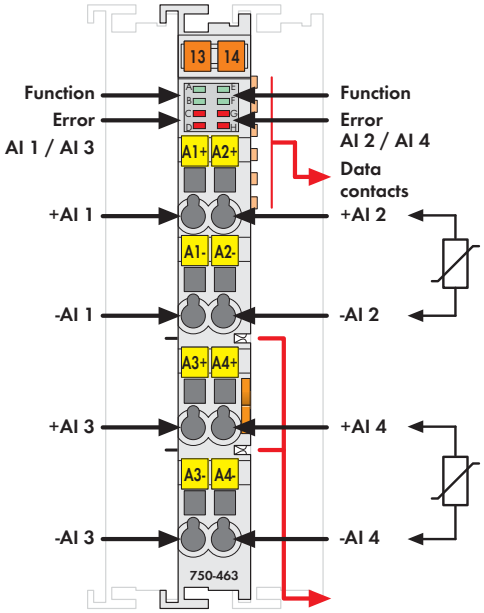

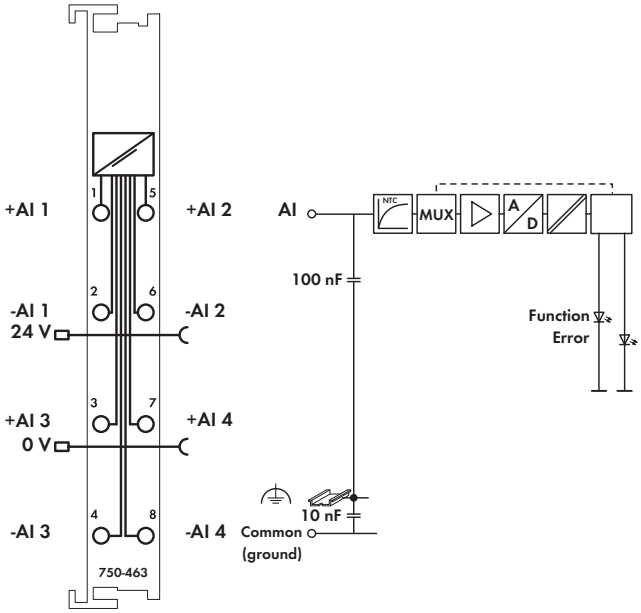

Delivered without miniature WSB markers

The input module directly connects to selected Pt or Ni resistance sensors.
It can only be operated as a 4-channel (2-connector technology) module.
Its temperature range is restricted to -30 °C to +150 °C.
The module automatically linearizes the entire temperature range. A sensor error is indicated by a red LED. The module can be configured via WAGO-I/O-CHECK or GSD files.
The module features multiple setting options and high accuracy.

Description	Item No.	Pack. Unit
4 AI RTD/-30 °C … +150 °C	**750-463**	1

Accessories		Item No.	Pack. Unit
Miniature WSB Quick marking system			
	plain	**248-501**	5
	with marking	see Section 11	

Approvals

Conformity marking	CE
Korea Certification	
ANSI/ISA 12.12.01	Class I, Div. 2, Grp. ABCD, T4
TÜV 07 ATEX 554086 X	I M2 Ex d I Mb, II 3 G Ex nA IIC T4 Gc, II 3 D Ex tc IIIC T135 °C Dc
IECEx TUN 09.0001 X	Ex d I Mb, Ex nA IIC T4 Gc, Ex tc IIIC T135 °C Dc

Technical Data

Number of inputs	4
Power supply	via system voltage DC/DC
Current consumption typ. (internal)	50 mA
Sensor types	Pt1000 (default setting), Ni1000, Ni1000 TK5000, KTY81 110, KTY81 210
Sensor connection	2-conductor
Temperature range	-30 °C … +150 °C
Resolution (over entire range)	0.1 °C
Measurement repetition rate (standard)	1.1 s
Measurement repetition rate (2-channel/ 2-conductor)	0.63 s
Response time (max.)	4 s
Measuring error (25 °C)	≤ 0.5 K in temperature range: -30 °C … +150 °C
Temperature coefficient	≤ 20 ppm/K
Isolation	500 V system/field
Measuring current (typ.)	≤ 350 µA
Bit width	4 x 16 bits data 4 x 8 bits control/status (optional)
Wire connection	CAGE CLAMP®
Cross sections	0.08 mm² … 2.5 mm² / AWG 28 … 14
Strip lengths	8 … 9 mm / 0.33 in
Width	12 mm
Weight	50.6 g
EMC immunity of interference	acc. to EN 61000-6-1, EN 61000-6-2
EMC emission of interference	acc. to EN 61000-6-3

2-/4-Channel Analog Input Module for RTDs

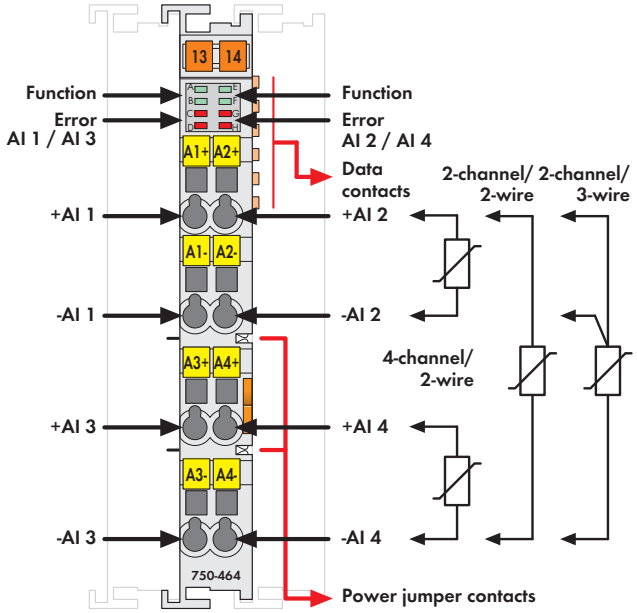

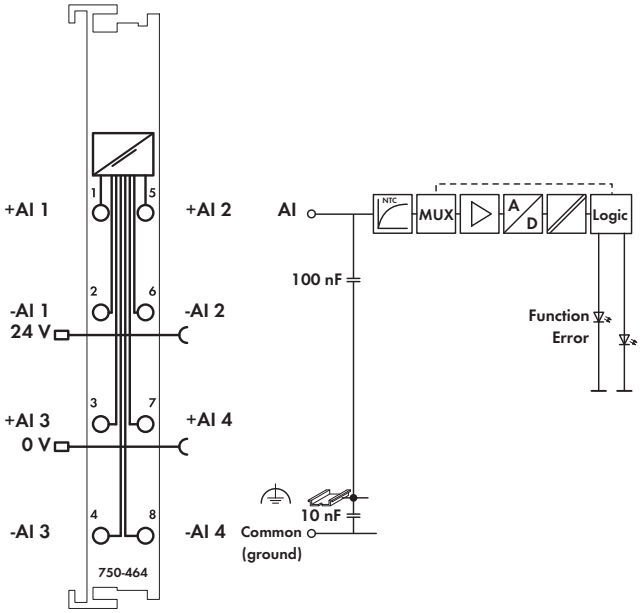

Delivered without miniature WSB markers

The RTD (resistive temperature device) input module directly connects Pt or Ni resistance sensors and potentiometers.
It can be operated as a 2-channel (2- and 3-conductor technology) or 4-channel (2-conductor technology) module.
The module automatically linearizes the entire temperature range.
A sensor error is indicated by a red LED.
The module can be configured via WAGO-I/O-CHECK or GSD.
Multiple setting options and high accuracy stand out.

The 750-464/020-000 version may connect NTC sensors.

Technical data for variant 750-464/020-000:
- Number of inputs: 4
- Sensor types: NTC 10 kOhm, NTC 20 kOhm, NTC 10 kOhm (Thermokon)
- Sensor connection: 2-conductor
- Temperature range: -30 °C ... +120 °C
- Measuring error: ≤ 2 K over entire temperature range

Description	Item No.	Pack. Unit
2/4 AI RTD, configurable	**750-464**	1
4 AI NTC, configurable	**750-464/020-000**	1
Differing technical data see text		

Accessories	Item No.	Pack. Unit
WAGO-I/O-CHECK, RS-232 kit	**759-302**	1
Miniature WSB Quick marking system		
plain	**248-501**	5
with marking	see Section 11	

Approvals

Conformity marking	CE
Korea Certification	
Marine applications (versions upon request)	ABS, BV, DNV, GL, KR, LR, NKK, PRS, RINA
UL 508	
ANSI/ISA 12.12.01	Class I, Div. 2, Grp. ABCD, T4
TÜV 07 ATEX 554086 X	I M2 Ex d I Mb,
	II 3 G Ex nA IIC T4 Gc,
	II 3 D Ex tc IIIC T135°C Dc
IECEx TUN 09.0001 X	Ex d I Mb,
	Ex nA IIC T4 Gc,
	Ex tc IIIC T135°C Dc

Technical Data

Number of inputs	2 / 4 (default setting)
Power supply	via system voltage DC/DC
Current consumption typ. (internal)	50 mA
Sensor types	Pt 100 (default setting), Pt 200, Pt 500,
	Pt 1000, Ni 100, Ni 120, Ni 1000,
	Potentiometer (only 2-channel operation),
	10 Ohm ... 1.2 kOhm, 10 Ohm ... 5 kOhm
Sensor connection	2-conductor (default setting),
	3-conductor (2-channel operation)
Temperature range	-200°C ... +850°C (Pt100),
	-60°C ... +300°C (Ni 100, Ni 1000),
	-60°C ... +250°C (Ni 1000 TK5000),
	-80°C ... +260°C (Ni 120)
Resolution (over entire range)	0.1 °C
Measurement repetition rate (standard)	1.1 s
Measurement repetition rate (2-channel/	
2-conductor)	0.63 s
Response time (max.)	4 s
Measuring error (25 °C)	≤ 1 K in the entire temp. range,
	≤ 0.5 K in the restricted temp. range*
	*-30 °C ... +120 °C, Pt 1000
Temperature coefficient	≤ 20ppm/K
Isolation	500 V system/supply
Measuring current (typ.)	≤ 350 µA
Bit width	4 (2) x 16 bits data
	4 (2) x 8 bits control/status (option)
Wire connection	CAGE CLAMP®
Cross sections	0.08 mm² ... 2.5 mm² / AWG 28 ... 14
Strip lengths	8 ... 9 mm / 0.33 in
Width	12 mm
Weight	50.6 g
EMC immunity of interference	acc. to EN 61000-6-1, EN 61000-6-2,
	marine applications
EMC emission of interference	acc. to EN 61000-6-3, marine applications

4-Channel Analog Input Module for RTDs

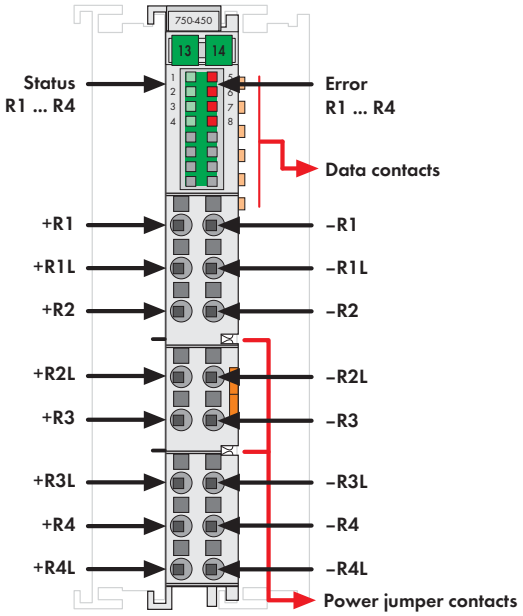

Delivered without miniature WSB markers

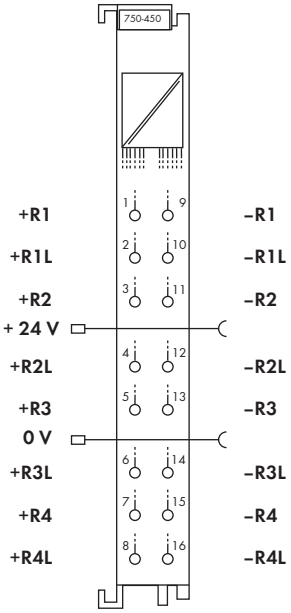

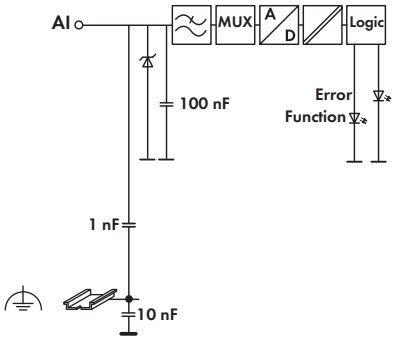

This input module directly connects to Pt or Ni resistance sensors and potentiometers.
Two-, three- or four-wire resistance sensors, as well as three-wire potentiometers can be connected. The module automatically linearizes the entire temperature range. A sensor error (short circuit, wire break or out-of-measurement range) is indicated by a red LED. Unused channels can be deactivated.
The module can be configured via WAGO-I/O-CHECK or GSD files, while featuring multiple setting options and high accuracy.

Description	Item No.	Pack. Unit
4 AI RTD, configurable	**750-450**	1

Accessories		Item No.	Pack. Unit
Miniature WSB Quick marking system			
	plain	**248-501**	5
	with marking	see Section 11	
Operating tool, with partially insulated shaft, type 1, blade (2.5 x 0.4) mm		**210-719**	50

Approvals

Conformity marking	CE

Technical Data	
Number of inputs	4
Power supply	via system voltage DC/DC
Current consumption typ. (internal)	85 mA
Sensor types	Pt100 (default setting), Pt200, Pt500, Pt1000, Ni100, Ni120, Ni1000 (TK6180 + TK5000), Potentiometer 0 Ohm ... 1.2 kOhm, 0 Ohm ... 5 kOhm
Sensor connection	2-conductor (default setting), 3-/4-conductor
Temperature range	-200 °C ... +850 °C (Pt 100, Pt 200, Pt 500, Pt 1000), -60 °C ... +250 °C (Ni 100, Ni 1000), -80 °C ... +260 °C (Ni 120)
Resolution	0.1 °C (over the entire range), 0.01 °C (-50 °C ... 150 °C; Pt1000, Ni1000)
Conversion time	per channel: ≤ 100 ms (2-/4-wire connection), ≤ 200 ms (3-wire connection)
Response time (max.)	3 s
Measuring error (25 °C)	≤ ±0.6 K (Pt100, Pt200, Pt500, Ni100, Ni120); ≤ ±0.2 K (Pt1000, Ni1000); ≤ ±0.3 Ω ... 0.7 Ω at resistance measurement
Isolation	500 V system/supply
Measuring current (typ.)	≤ 350 µA
Bit width	4 x 16 bits data 4 x 8 bits control/status (option)
Wire connection	Push-in CAGE CLAMP®
Cross sections	solid: 0.08 mm² ... 1.5 mm² / AWG 28 ... 16 fine-stranded: 0.25 mm² ... 1.5 mm² / AWG 22 ... 16
Strip lengths	8 ... 9 mm / 0.33 in
Width	12 mm
Weight	49.2 g
EMC immunity of interference	acc. to EN 61000-6-1, EN 61000-6-2
EMC emission of interference	acc. to EN 61000-6-3

8-Channel Analog Input Module for RTDs

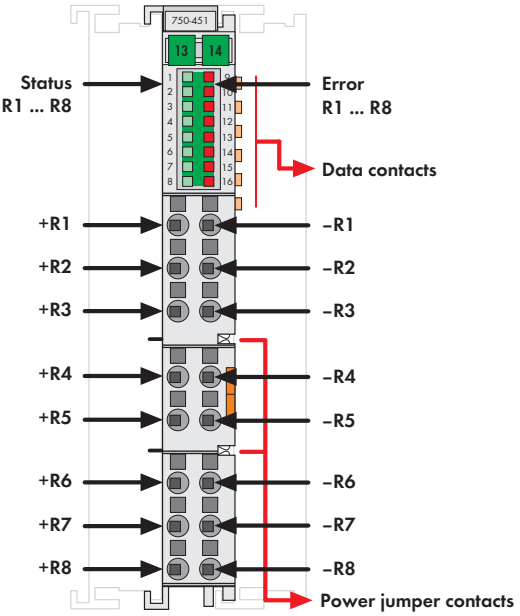

Delivered without miniature WSB markers

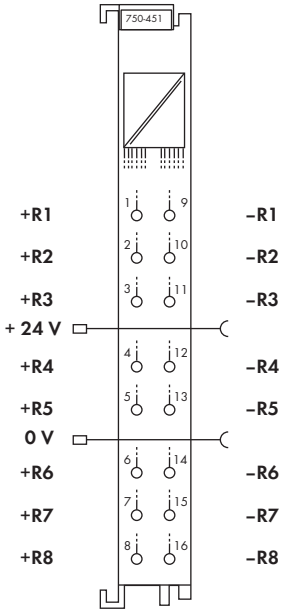

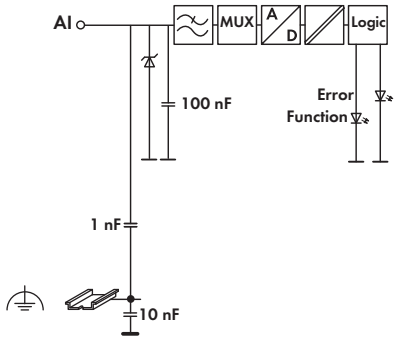

The input module directly connects to Pt and Ni resistance sensors.
Two-wire sensors can be connected.
The module automatically linearizes the entire temperature range.
A sensor error (short circuit, wire break or out-of-measurement range) is indicated by a red LED. Unused channels can be deactivated.
The module can be configured via WAGO-I/O-CHECK or GSD files, while featuring multiple setting options and high accuracy.

Description	Item No.	Pack. Unit
8 AI RTD, configurable	**750-451**	1

Accessories		Item No.	Pack. Unit
Miniature WSB Quick marking system			
	plain	**248-501**	5
	with marking	see Section 11	
Operating tool, with partially insulated shaft, type 1, blade (2.5 x 0.4) mm		**210-719**	50

Approvals

Conformity marking	CE

Technical Data

Number of inputs	8
Power supply	via system voltage DC/DC
Current consumption typ. (internal)	110 mA
Sensor types	Pt100 (default setting), Pt200, Pt500, Pt1000, Ni100, Ni120, Ni1000 (TK6180 + TK5000), Potentiometer 0 Ohm ... 1.2 kOhm, 0 Ohm ... 5 kOhm
Sensor connection	2-conductor
Temperature range	-200 °C ... +850 °C (Pt100, Pt200, Pt500, Pt1000), -60 °C ... +250 °C (Ni100, Ni1000), -80 °C ... +260 °C (Ni120)
Resolution	0.1 °C (over the entire range), 0.01 °C (-50 °C ... 150 °C; Pt1000, Ni1000)
Conversion time	per channel: ≤ 100 ms
Response time (max.)	3 s
Measuring error (25 °C)	≤ ±0.6 K (Pt100, Pt200, Pt500, Ni100, Ni120); ≤ ±0.2 K (Pt1000, Ni1000); ≤ ±0.3 Ω at resistance measurement
Isolation	500 V system/supply
Measuring current (typ.)	≤ 350 µA
Bit width	8 x 16 bits data 8 x 8 bits control/status (option)
Wire connection	Push-in CAGE CLAMP®
Cross sections	solid: 0.08 mm² ... 1.5 mm² / AWG 28 ... 18 fine-stranded: 0.25 mm² ... 1.5 mm² / AWG 22 ... 16
Strip lengths	8 ... 9 mm / 0.33 in
Width	12 mm
Weight	48.8 g
EMC immunity of interference	acc. to EN 61000-6-1, EN 61000-6-2
EMC emission of interference	acc. to EN 61000-6-3

2-Channel Analog Input Module for Thermocouples

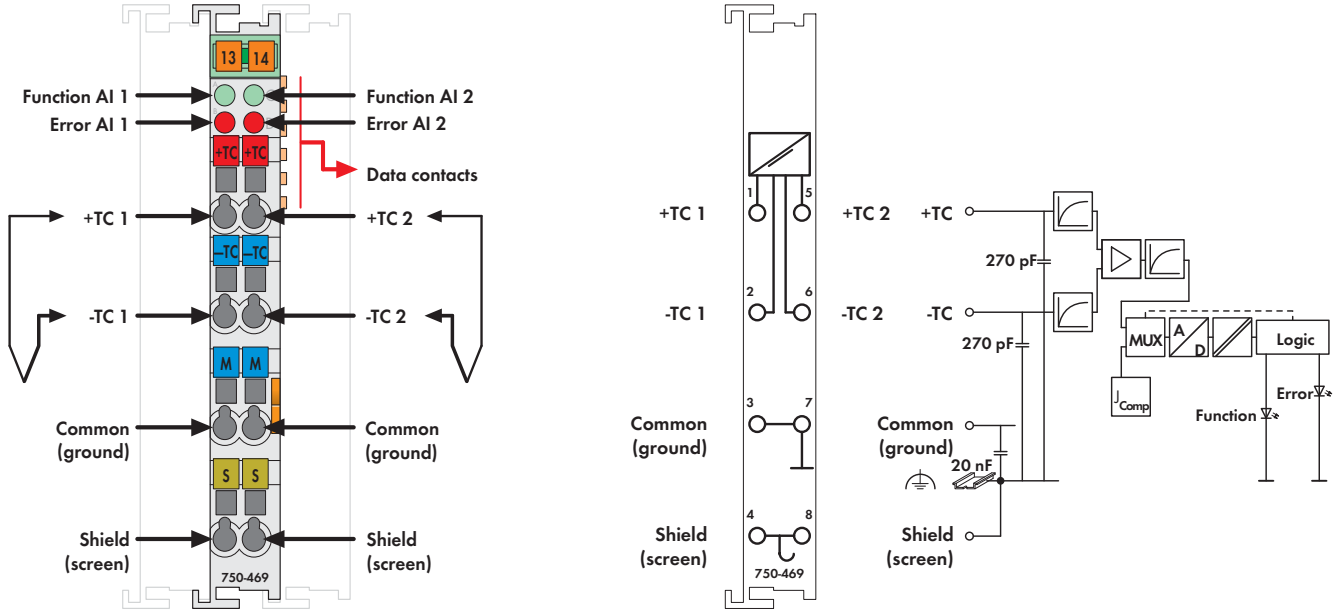

Fig. 750 Series
Delivered without miniature WSB markers

The thermocouple input module allows the direct connection of two thermocouples.
The module automatically linearizes the entire temperature range.
Cold junction compensation is utilized to compensate for the clamping unit offset voltage over the 0-55 °C operating range.
A line break is indicated by a red LED. A green LED indicates readiness for operation and trouble-free communication with the buscoupler.
The shield (screen) is directly connected to the DIN rail.

- -100 °C ... +1370 °C; type K
- -50 °C ... +1700 °C; type S
- -100 °C ... +400 °C; type T
- -100 °C ... +1200 °C; type J
- -100 °C ... +1000 °C; type E
- -100 °C ... +900 °C; type L

All listed sensor types are supported by the configurable variation.
Set-up using the WAGO-I/O-Check 2 software.
Other variations are available upon request:
600 °C ... +1800 °C; type B, -100 °C ... +1300 °C; type N,
0 °C ... +1700 °C; type R, -25 °C ... +600 °C; type U, -120 mV ... +120 mV.

Description	Item No.	Pack. Unit
2AI Thermocouple/K/Diagn.	**750-469**	1
2AI Thermocouple/S/Diagn.	**750-469/000-001**	1
2AI Thermocouple/T/Diagn.	**750-469/000-002**	1
2AI ±120mV Diagn.	**750-469/000-003**	1
2AI Thermocouple/J/Diagn.	**750-469/000-006**	1
2AI Thermocouple/E/Diagn.	**750-469/000-008**	1
2AI Thermocouple/L/Diagn.	**750-469/000-012**	1
2AI Thermocouple/K/Diagn./S5 [1]	**750-469/000-200**	1
2AI Thermocouple/Free Config.	**750-469/003-000**	1
2AI Thermocouple/K/Diagn. (without connector)	**753-469**	1
2AI Thermocouple/Free Config. (without connector)	**753-469/003-000**	1

[1] Data format for S5 control with FB 251

Approvals

Conformity marking	CE
Korea Certification	KC
Marine applications (versions upon request)	ABS, BV, DNV, GL, KR, LR, PRS, RINA
cULus UL 508	
cULus ANSI/ISA 12.12.01	Class I, Div. 2, Grp. ABCD, T4
TÜV 07 ATEX 554086 X	I M2 Ex d I Mb, II 3 G Ex nA IIC T4 Gc, II 3 D Ex tc IIIC T135°C Dc
IECEx TUN 09.0001 X	Ex d I Mb, Ex nA IIC T4 Gc, Ex tc IIIC T135°C Dc

Technical Data

Number of inputs	2
Power supply	via system voltage DC/DC
Max. current consumption (internal)	65 mA
Sensor types	Type K; -100°C ... +1370°C (basic variation), optional variations available for type J, B, E, N, R, S, T, U and L
Internal resistance	1 MΩ
Cold junction compensation	at each pair of terminal blocks
Resolution (over entire range)	0.1 °C
Conversion time	320 ms (each channel)
Measuring error (25 °C)	< ± 6 K (volt. input < ± 2 K, cold junct. < ± 4 K)
Temperature coefficient	< ± 0.2 K/K
Isolation	500 V system/supply
Bit width	2 x 16 bits data 2 x 8 bits control/status (optional)
Wire connection	CAGE CLAMP®
Cross sections	0.08 mm² ... 2.5 mm² / AWG 28 ... 14
Strip lengths, 750/753 Series	8 ... 9 mm / 0.33 in 9 ... 10 mm / 0.37 in
Width	12 mm
Weight	38.2 g
EMC immunity of interference	acc. to EN 61000-6-2, marine applications
EMC emission of interference	acc. to EN 61000-6-4, marine applications

Accessories

Accessories	Item No.	Pack. Unit
753 Series Connectors	**753-110**	25
Coding elements	**753-150**	100
Miniature WSB Quick marking system	see Section 11	

1-Channel Analog Input Module for Resistor Bridges (Strain Gauge)

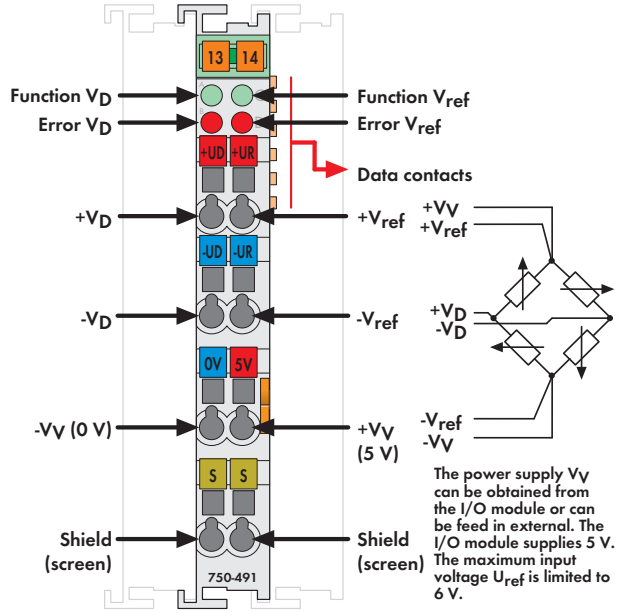

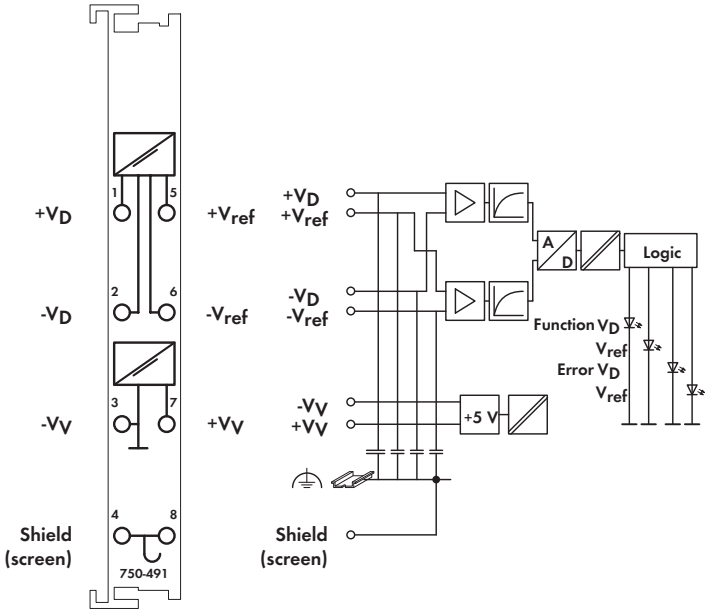

Delivered without miniature WSB markers

The analog input module enables the direct connection of a resistor measurement bridge. The bridge voltage V_D and supply voltage V_{ref} of the bridge are digitized with a resolution of 16 bits.

The input channels for the resistor bridge are available as two 16 bit values for further processing. The result of measurement can be calculated by the formula: Measured value = V_D/V_{ref}.

Field and system levels are electrically isolated.

Description	Item No.	Pack. Unit
1AI for Resistor Bridges	**750-491**	1
1AI for Resistor Bridges / 125ms	**750-491/000-001**	1
Conversion time 125 ms, Filter 200 Hz		

Accessories		Item No.	Pack. Unit
Miniature WSB Quick marking system			
	plain	**248-501**	5
	with marking	see Section 11	

Approvals

Conformity marking	CE
Korea Certification	

Technical Data	
Number of inputs	2, for one resistor bridge
Power supply	via system voltage DC/DC
Current consumption typ. (internal)	65 mA
Signal voltage V_D	-15mV ... +15mV
Signal voltage V_{ref}	+2V ... +6V
Internal resistance	> 200 kΩ (V_{ref}), > 1 MΩ (V_D)
Voltage supply Vv	5 V DC, 20 mA
Resolution	16 bits
Conversion time	500 ms
Measuring error	V_D: ± 30 µV; V_{ref}: ± 10 mV
Filter	50 Hz
Isolation	500 V system/supply
Bit width	2 x 16 bits data
	2 x 8 bits control/status (optional)
Wire connection	CAGE CLAMP®
Cross sections	0.08 mm² ... 2.5 mm² / AWG 28 ... 14
Strip lengths	8 ... 9 mm / 0.33 in
Width	12 mm
Weight	60 g
EMC immunity of interference	acc. to EN 61000-6-2
EMC emission of interference	acc. to EN 61000-6-4

3-Phase Power Measurement Module

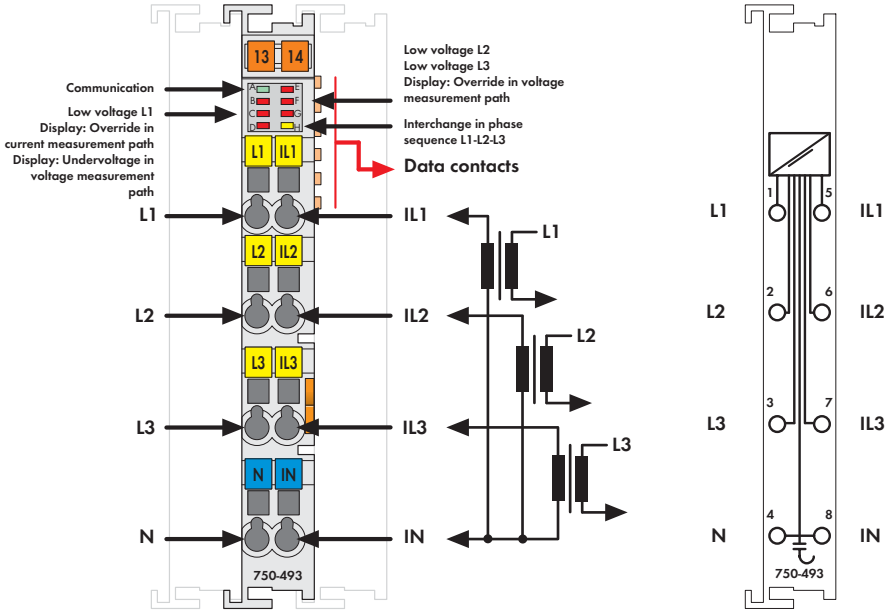

Delivered without miniature WSB markers

The 750-493 3-Phase Power Measurement Module measures the electrical data in a 3-phase supply network. The voltage is measured via network connection to L1, L2, L3 and N. The current of the three phases is fed to IL1, IL2, IL3 and IN via current transformers.
The 3-phase power measurement module transmits the root mean square values into the process image without requiring high computing power from the controller. For each phase, the effective power (P), the energy consumption (W) and the power factor (cos φ) are calculated by the 3-phase power measurement module using the root mean square values of all measured voltages (V) and currents (I).
For example, both the apparent power (S) and phase shift angle (φ) can be easily derived from these values. Therefore, the 3-phase power measurement module provides a comprehensive network analysis via the fieldbus. By means of values such as voltage, current, effective and apparent power consumption or load condition, the operator can regulate the supply to a drive or machine in the best possible way and protect the installation from damage/failure.

Description	Item No.	Pack. Unit
3-Phase Power Measurement Module (1 A)	**750-493**	1
3-Phase Power Measurement Module (5 A)	**750-493/000-001**	1
3-Phase Power Measurement Module (1 A)/T	**750-493/025-000**	1
Extended temperature range: -20 °C ... +60 °C		

Accessories	Item No.	Pack. Unit
Miniature WSB Quick marking system		
plain	**248-501**	5
with marking	see Section 11	

Approvals

Conformity marking	CE
Korea Certification	
UL 508	
ANSI/ISA 12.12.01	Class I, Div. 2, Grp. ABCD, T4
TÜV 07 ATEX 554086 X	I M2 Ex d I Mb,
	II 3 G Ex nA IIC T4 Gc,
	II 3 D Ex tc IIIC T135°C Dc
IECEx TUN 09.0001 X	Ex d I Mb,
	Ex nA IIC T4 Gc,
	Ex tc IIIC T135°C Dc

Technical Data

Number of measurement inputs	6 (3 voltage measurement inputs, 3 current measurement inputs)
Rated voltage	V_{LN} = 277 V AC/DC; V_{LL} = 480 V AC
Input resistance voltage path (typ.)	1071 kΩ
Measuring current (max.)	1 A (750-493)
	5 A (750-493/000-001)
Input resistance current path (typ.)	22 mΩ (750-493)
	5 mΩ (750-493/000-001)
Resolution	16 bits
Frequency range with activated DC filter	10 Hz ... 2000 Hz
Frequency range with deactivated DC filter	0 Hz ... 2000 Hz
Max. operating frequency	7.2 kHz
Signal form	any (in consideration of the maximum operating frequency)
Measuring error for current and voltage	AC: Max 0.5 %; DC: 1.0 % (of the upper range value)
Measuring procedure	True RMS measurement
Measuring cycle time	Adjustable for measured value, Min_Max_Values
Measured values	Effective power, energy, power factor (cos φ)
Power supply	via system voltage internal bus (5 V)
Current consumption (internal)	100 mA
Rated surge voltage	4 kV
Bit width	2 x 48-bit data, 2 x 24-bit control/status (option)
Wire connection	CAGE CLAMP®
Cross sections	0.08 mm² ... 2.5 mm² / AWG 28 ... 14
Strip lengths	8 ... 9 mm / 0.33 in
Width	12 mm
Weight	48.5 g
EMC immunity of interference	acc. to EN 61000-6-2
EMC emission of interference	acc. to EN 61000-6-3

3-Phase Power Measurement Module

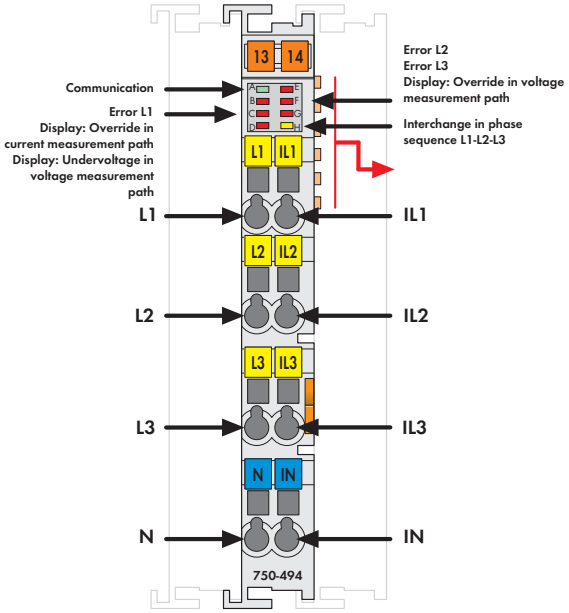

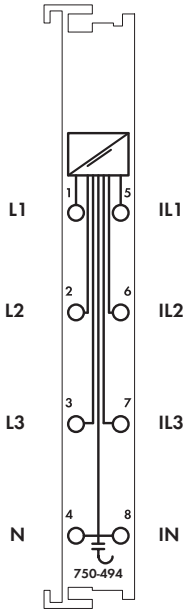

The 750-494 3-Phase Power Measurement Module measures electrical data in a three-phase supply network. The voltage is measured via network connection to L1, L2, L3 and N. The current of the three phases is fed to IL1, IL2, IL3 and IN via current transformers. The 750-494 Module transmits metrics (e.g., reactive/apparent/effective power, energy consumption, power factor, phase angle, frequency, over-/undervoltage) directly into the process image, without requiring high computing power from the controller. Both comprehensive metrics and harmonic analysis up to the 41st harmonic permit an extensive network analysis via the fieldbus.
Metrics allow the operator to optimize the supply to a drive or machine, protecting the system from damage and failure.
The 4-quadrant display indicates the type of load (inductive, capacitive) and whether it is an energy consumer or producer.

Description	Item No.	Pack. Unit
3-Phase Power Measurement Module (480V/1A)	**750-494**	1
3-Phase Power Measurement Module (480V/5A)	**750-494/000-001**	1
3-Phase Power Measurement Module (480V/1A)/T	**750-494/025-000**	1
Extended temperature range: -20 °C ... +60 °C		
3-Phase Power Measurement Module (480V/5A)/T	**750-494/025-001**	1
Extended temperature range: -20 °C ... +60 °C		

Accessories		Item No.	Pack. Unit
Miniature WSB Quick marking system			
	plain	**248-501**	5
	with marking	see Section 11	

Approvals

Conformity marking	CE
UL 508	
ANSI/ISA 12.12.01	Class I, Div. 2, Grp. ABCD, T4
TÜV 07 ATEX 554086 X	I M2 Ex d I Mb,
	II 3 G Ex nA IIC T4 Gc,
	II 3 D Ex tc IIIC T135°C Dc
IECEx TUN 09.0001 X	Ex d I Mb,
	Ex nA IIC T4 Gc,
	Ex tc IIIC T135°C Dc

Technical Data

Wire connection	CAGE CLAMP®
Cross sections	0.08 mm² ... 2.5 mm² / AWG 28 ... 14
Strip lengths	8 ... 9 mm / 0.33 in
Width	12 mm
Weight	50.5 g
EMC immunity of interference	acc. to EN 61000-6-2
EMC emission of interference	acc. to EN 61000-6-3

Technical Data

Number of measurement inputs	6 (3 voltage measurement inputs, 3 current measurement inputs)
Rated voltage	V_{LN} = 277 V AC/DC; V_{LL} = 480 V AC
Input resistance voltage path (typ.)	1072 kΩ
Measuring current (max.)	1 A (750-494, 750-494/025-000)
	5 A (750-494/000-001, 750-494/025-001)
Input resistance current path (typ.)	22 mΩ (750-494, 750-494/025-000)
	5 mΩ (750-494/000-001, 750-494/025-001)
Resolution	24 bits
Frequency range, power supply frequency	45 Hz ... 65 Hz
Frequency range, harmonics analysis	
	0 Hz ... 3300 Hz
Max. operating frequency	15.9 kHz
Signal form	any periodic signals (taking the maximum frequency into account)
Measuring error for current and voltage	AC: Max. 0.5 %;
	DC: 1.0 % (of the upper range value);
	DC measurement (2 channels only)
Measuring procedure	True RMS measurement
Measuring cycle time	Adjustable for arithmetic mean value, Min_Max_Values
Measured values	Line-to-line voltage, power output, energy, power factors, mains frequency, harmonic analysis (up to the 41st harmonic), THD
Power supply	via system voltage internal bus (5 V)
Current consumption (internal)	100 mA
Rated surge voltage	4 kV
Bit width	2 x 128 bits data
	2 x 64 bits control/status

3-Phase Power Measurement Module

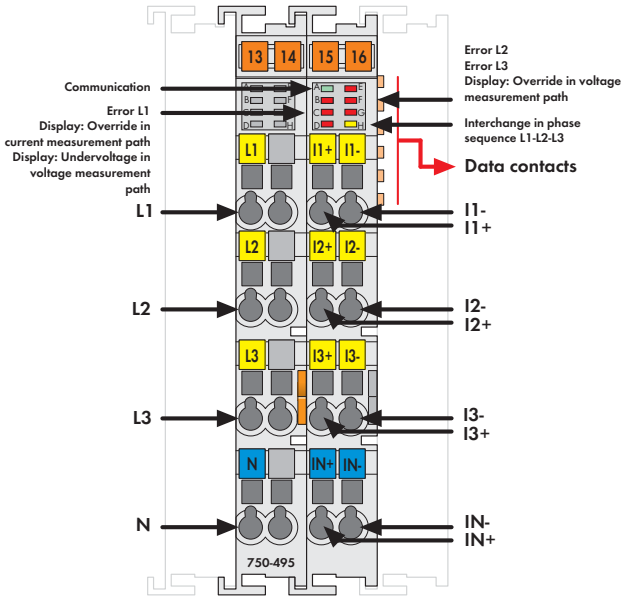

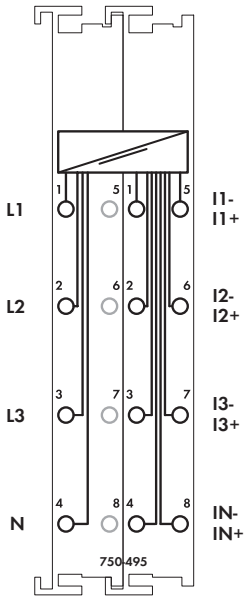

The 750-495 3-Phase Power Measurement Module measures electrical data in a three-phase supply network. The voltage is measured via network connection to L1, L2, L3 and N. The current of the three phases is fed to IL1, IL2, IL3 and IN (two clamping points each +,-) via current transformers or via Rogowski coils for the 750-495/000-002 module. The 750-495 Module transmits metrics (e.g., reactive/apparent/effective power, energy consumption, power factor, phase angle, frequency, over-/undervoltage) directly into the process image, without requiring high computing power from the controller.

Both comprehensive metrics and harmonic analysis up to the 41st harmonic permit extensive network analysis via the fieldbus.
Metrics allow the operator to optimize the supply to a drive or machine, protecting the system from damage and failure.
Insulation failures can be detected and prevented via current measurement performed in the neutral conductor. The 4-quadrant display indicates the type of load (inductive, capacitive) and whether it is an energy consumer or producer.

Description	Item No.	Pack. Unit
3-Phase Power Measurement Module (690V/1A)	**750-495**	1
3-Phase Power Measurement Module (690V/5A)	**750-495/000-001**	1
3-Phase Power Measurement Module (690V/RC) Rogowski Coils	**750-495/000-002**	1

Accessories		Item No.	Pack. Unit
Miniature WSB Quick marking system			
	plain	**248-501**	5
	with marking	see Section 11	

Approvals

Conformity marking	CE

Technical Data

Wire connection	CAGE CLAMP®
Cross sections	0.08 mm² ... 2.5 mm² / AWG 28 ... 14
Strip lengths	8 ... 9 mm / 0.33 in
Width	12 mm
Weight	48.5 g
EMC immunity of interference	acc. to EN 61000-6-2
EMC emission of interference	acc. to EN 61000-6-3

Technical Data

Number of measurement inputs	7 (3 voltage measurement inputs, 4 differential current measurement inputs)
Rated voltage	V_{LN} = 400 V AC; V_{LL} = 690 V AC
Input resistance voltage path (typ.)	1429 kΩ
Measuring current (max.)	1 A (750-495) 5 A (750-495/000-001) Rogowski Coils RT500/RT2000 (750-495/000-002)
Input resistance current path (typ.)	22 mΩ (750-495) 5 mΩ (750-495/000-001) 44 kΩ (750-495/000-002)
Resolution	24 bits
Frequency range, power supply frequency	45 Hz ... 65 Hz
Frequency range, harmonics analysis	0 Hz ... 3300 Hz
Max. operating frequency	15,9 kHz
Signal form	any periodic signals (taking the maximum frequency into account)
Measuring error for current and voltage	Max. 0.5 % (of the upper range value)
Measuring procedure	True RMS measurement
Measuring cycle time	Adjustable for arithmetic mean value, Min_Max_Values
Measured values	Line-to-line voltage, power output, energy, power factors, mains frequency, harmonic analysis (up to the 41st harmonic), THD
Power supply	via system voltage internal bus (5 V)
Current consumption (internal)	100 mA
Rated surge voltage	6 kV
Bit width	2 x 128 bits data 2 x 64 bits control/status

Analog Output Modules

Housing Design 750/753 Series	
Dimensions (mm) W x H x L	12 x 65 x 100 (Height from upper edge of the DIN-rail)
Wire connection	CAGE CLAMP®
Cross sections	0.08 mm² ... 2.5 mm² / 28 ... 14 AWG
Strip lengths	750 Series: 8 ... 9 mm / 0.33 in. 753 Series: 9 ... 10 mm / 0.37 in.

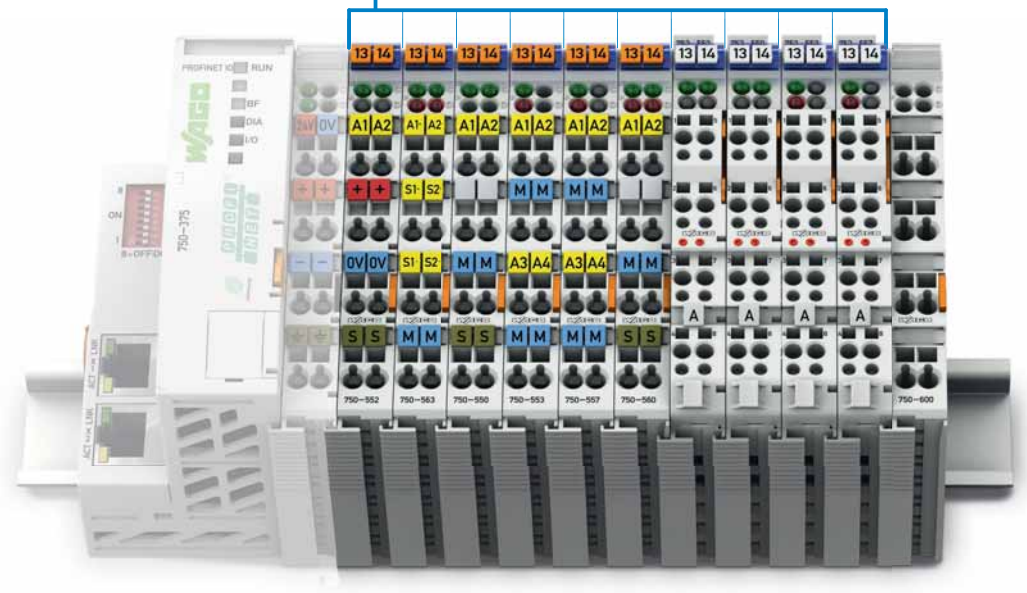

I/O-Systems; Analog Output Modules

Contents

Function	2-Channel AO	4-Channel AO	Description	Item No.				Page
				Standard	/S5 Data format	/T Extended operating temperature range: -20 °C ... +60 °C	Pluggable	
0 – 20 mA	■		12 bits	750-552	750-552/000-200	750-552/025-000	753-552	282
		■	12 bits	750-553			753-553	284
4 – 20 mA	■		12 bits	750-554	750-554/000-200	750-554/025-000	753-554	282
		■	12 bits	750-555			753-555	284
0/4 – 20 mA	■		16 bits, configurable	750-563				283
0 – 10 V	■		12 bits	750-550	750-550/000-200		753-550	285
	■		10 bits, 10 mA	750-560				288
		■	12 bits	750-559		750-559/025-000	753-559	287
± 10 V	■		12 bits	750-556	750-556/000-200		753-556	285
		■	12 bits	750-557			753-557	287
0 V/± 10 V	■		16 bits, configurable	750-562				286
Exi				see Section 4.9				

2-Channel Analog Output Module 0/4-20 mA

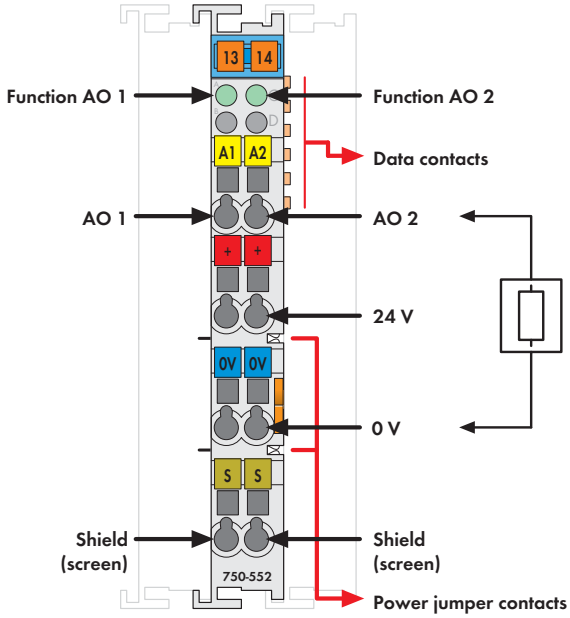

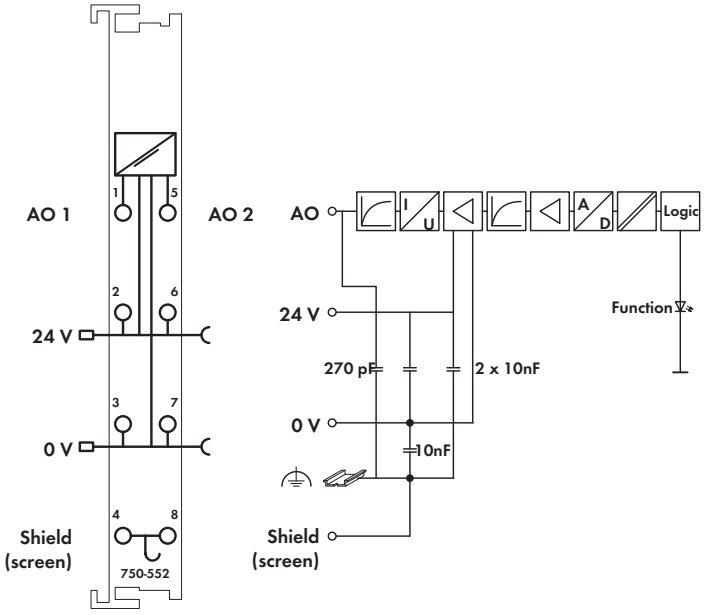

Fig. 750 Series
Delivered without miniature WSB markers

The analog output module creates a standardized signal of 0-20mA or 4-20mA.

The output signal is electrically isolated and will transmit with a 12-bit resolution.

"Current" analog output modules use power derived from the field side (loop powered).

Description	Item No.	Pack. Unit
2AO 0-20mA	**750-552**	1
2AO 4-20mA	**750-554**	1
2AO 0-20mA/S5 [1]	**750-552/000-200**	1
2AO 0-20mA/T	**750-552/025-000**	1
Extended temperature range: -20 °C ... +60 °C		
2AO 4-20mA/S5 [1]	**750-554/000-200**	1
2AO 4-20mA/T	**750-554/025-000**	1
Extended temperature range: -20 °C ... +60 °C		
2AO 0-20mA (without connector)	**753-552**	1
2AO 4-20mA (without connector)	**753-554**	1

[1] Data format for S5 control with FB 251

Accessories

	Item No.	Pack. Unit
753 Series Connectors	**753-110**	25
Coding elements	**753-150**	100
Miniature WSB Quick marking system		
plain	**248-501**	5
with marking	see Section 11	

Approvals

Conformity marking	CE
Korea Certification	
Marine applications (versions upon request)	ABS, BV, DNV, GL, KR, LR, NKK, PRS, RINA
UL 508	
ANSI/ISA 12.12.01	Class I, Div. 2, Grp. ABCD, T4
TÜV 07 ATEX 554086 X	I M2 Ex d I Mb,
	II 3 G Ex nA IIC T4 Gc,
	II 3 D Ex tc IIIC T135°C Dc
IECEx TUN 09.0001 X	Ex d I Mb,
	Ex nA IIC T4 Gc,
	Ex tc IIIC T135°C Dc

Technical Data

No. of outputs	2
Current consumption typ. (internal)	70 mA
Voltage via power jumper contacts	24 V DC (-25 % ... +30 %)
Signal current	0 - 20mA (750-552 / 753-552)
	4 - 20mA (750-554 / 753-554)
Load impedance	< 600 Ω
Linearity	± 10 µA
Resolution	12 bits
Conversion time	approx. 2 ms
Measuring error (25 °C)	< ± 0.1 % of the full scale value
Temperature coefficient	< ± 0.01 % /K of the full scale value
	(750-552 / 753-552)
	< ± 0,015 % /K of the full scale value
	(750-554 / 753-554)
Isolation	500 V system/supply
Bit width	2 x 16 bits data
	2 x 8 bits control/status (option)
Wire connection	CAGE CLAMP®
Cross sections	0.08 mm² ... 2.5 mm² / AWG 28 ... 14
Strip lengths, 750/753 Series	8 ... 9 mm / 0.33 in
	9 ... 10 mm / 0.37 in
Width	12 mm
Weight	51 g
EMC immunity of interference	acc. to EN 61000-6-2, marine applications
EMC emission of interference	acc. to EN 61000-6-4, marine applications

2-Channel Analog Output Module, 0/4 ... 20 mA / 6 ... 18 V DC

16 bits, configurable

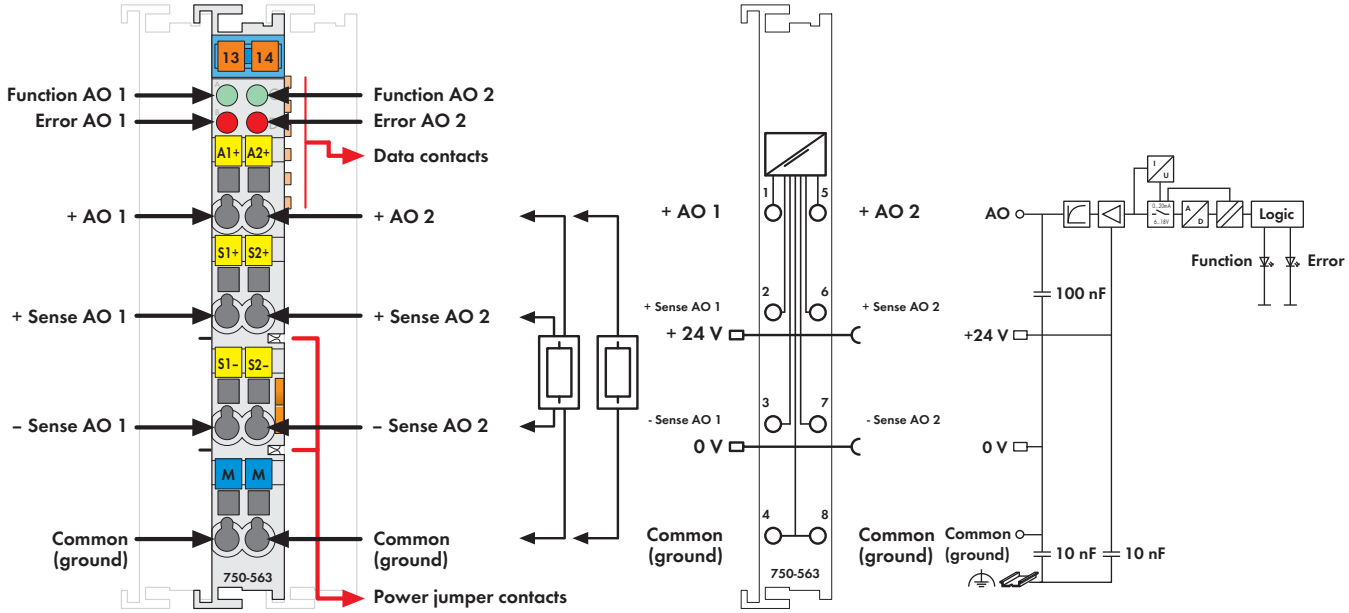

Delivered without miniature WSB markers

The 750-563 Analog Output Module generates output currents ranging from 0/4 to 20mA or output voltages in the range from 6 to 18V for the field. Output areas can be configured via WAGO-I/O-CHECK or GSD files.
The module has two short circuit-proof output channels and enables direct connection of two 2-wire actuators to AO 1 and ground or AO 2 and ground. The output of the signals occurs via AO 1 or AO 2. In addition, the sense lines from 4-wire actuators can be connected to -Sense AO1 and +Sense AO1 or -Sense AO2 and +Sense AO2.

Both output channels have a common ground potential.
The output signal is electrically isolated and transmitted with a resolution of 16 bits.
Both the internal system and the field side supply power the module.

Description	Item No.	Pack. Unit
2 AO 0/4-20mA / 6-18V DC 16 Bit	**750-563**	1

Accessories		Item No.	Pack. Unit
Miniature WSB Quick marking system			
	plain	**248-501**	5
	with marking	see Section 11	

Approvals

Conformity marking	CE
Korea Certification	
Marine applications	GL
cULus UL 508	
cULus ANSI/ISA 12.12.01	Class I, Div. 2, Grp. ABCD, T4
TÜV 07 ATEX 554086 X	I M2 Ex d I Mb, II 3 G Ex nA IIC T4 Gc, II 3 D Ex tc IIIC T135°C Dc
IECEx TUN 09.0001 X	Ex d I Mb, Ex nA IIC T4 Gc, Ex tc IIIC T135°C Dc

Technical Data

No. of outputs	2
Current consumption (internal)	80 - 110mA
Voltage via power jumper contacts	24 V DC (-15 % ... +20 %)
Output voltage	6 V ... 18 V (switchable)
Output current	0/4 mA ... 20 mA (switchable)
Load impedance	> 1.8 kΩ (voltage output)
	< 500 Ω (current output)
Resolution	16 bits
Conversion time (typ.)	5 ms
Recovery time (typ.)	< 300 µs
Measuring error (25 °C)	< ± 0.05 % of the scale end value
Temperature coefficient	< ± 100ppm
Isolation	500 V system/supply
Bit width	2 x 16 bits data
	2 x 8 bits control/status (option)
Wire connection	CAGE CLAMP®
Cross sections	0.08 mm² ... 2.5 mm² / AWG 28 ... 14
Width	12 mm
Weight	53.5 g
EMC immunity of interference	acc. to EN 61131-2, marine applications
EMC emission of interference	acc. to EN 61131-2, marine applications

4-Channel Analog Output Module 0/4-20 mA

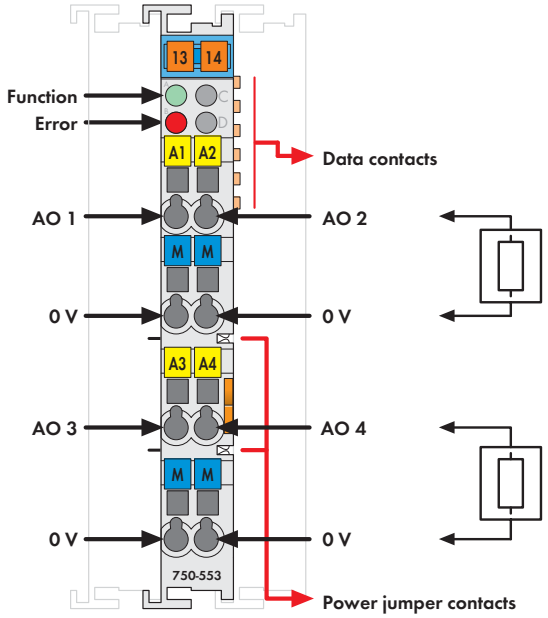

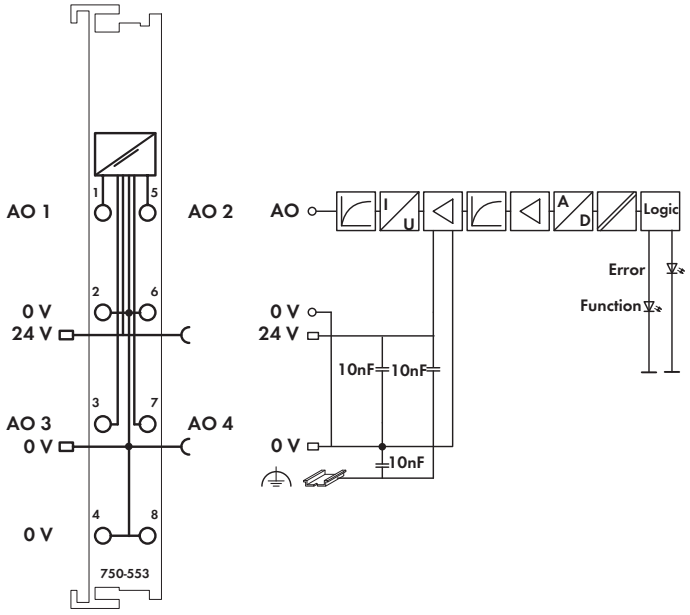

Fig. 750 Series
Delivered without miniature WSB markers

The analog output module creates a standardized signal of 0-20mA or 4-20mA.

The output signal is electrically isolated and will be transmitted with a resolution of 12 bits.

"Current" analog output modules use power derived from the field side (loop powered).

The output channels have one common ground potential.

Description	Item No.	Pack. Unit
4AO 0-20mA	**750-553**	1
4AO 4-20mA	**750-555**	1
4AO 0-20mA (without connector)	**753-553**	1
4AO 4-20mA (without connector)	**753-555**	1

Accessories	Item No.	Pack. Unit
753 Series Connectors	**753-110**	25
Coding elements	**753-150**	100
Miniature WSB Quick marking system		
plain	**248-501**	5
with marking	see Section 11	

Approvals

Conformity marking	CE
Korea Certification	
Marine applications	ABS, BV[1], DNV, GL, KR, LR, NKK, PRS, RINA
UL 508	
ANSI/ISA 12.12.01	Class I, Div. 2, Grp. ABCD, T4
TÜV 07 ATEX 554086 X	I M2 Ex d I Mb,
	II 3 G Ex nA IIC T4 Gc,
	II 3 D Ex tc IIIC T135°C Dc
IECEx TUN 09.0001 X	Ex d I Mb,
	Ex nA IIC T4 Gc,
	Ex tc IIIC T135°C Dc

[1] Does not apply to 753-55x

Technical Data

No. of outputs	4
Current consumption typ. (internal)	60 mA
Power supply	via system voltage DC/DC
Signal current	0 - 20mA (750-553 / 753-553)
	4 - 20mA (750-555 / 753-555)
Load impedance	either 0 ... 300 Ω or 300 ... 600 Ω (use
	same range of impedance for all loads!)
Resolution	12 bits
Conversion time (typ.)	10 ms
Recovery time (typ.)	100 ms
Measuring error (25 °C)	< ± 0.1 % of the full scale value
Temperature coefficient	< ± 0.01 % /K of the full scale value
Isolation	500 V system/supply
Bit width	4 x 16 bits data
	4 x 8 bits control/status (option)
Wire connection	CAGE CLAMP®
Cross sections	0.08 mm² ... 2.5 mm² / AWG 28 ... 14
Strip lengths, 750/753 Series	8 ... 9 mm / 0.33 in
	9 ... 10 mm / 0.37 in
Width	12 mm
Weight	51.4 g
EMC immunity of interference	acc. to EN 61000-6-2, marine applications
EMC emission of interference	acc. to EN 61000-6-4, marine applications

2-Channel Analog Output Module 0-10 V/±10V

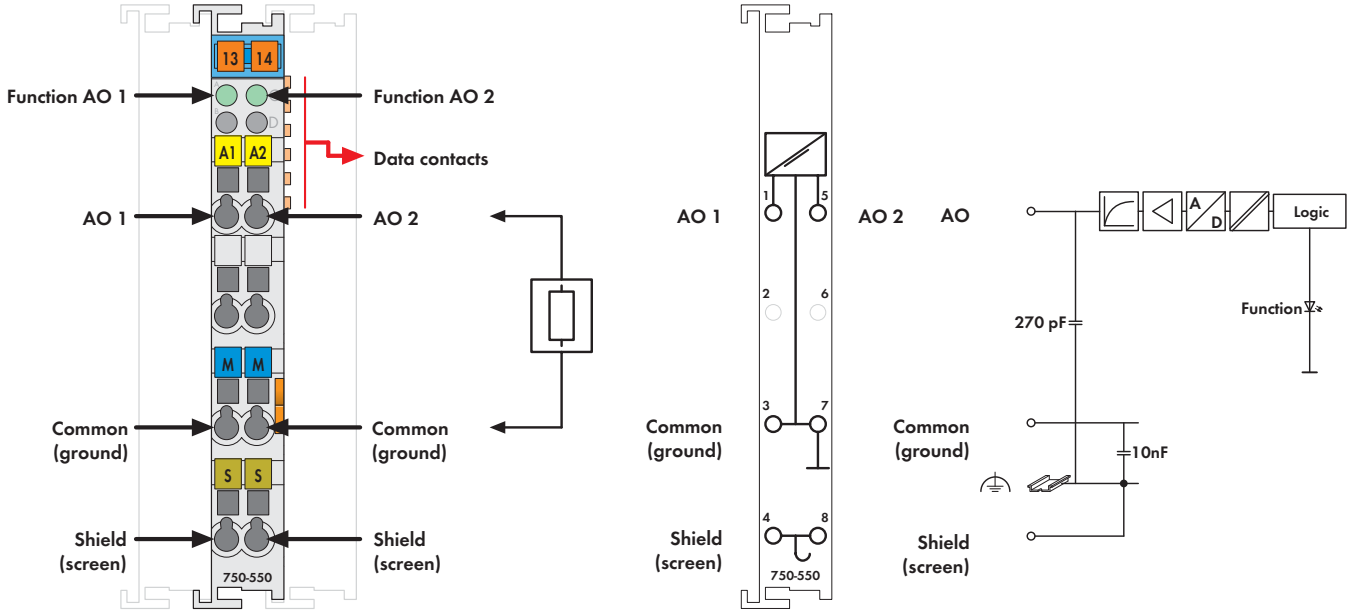

Fig. 750 Series
Delivered without miniature WSB markers

The analog output module creates a standardized signal of 0-10V or ±10V.

The output signal is electrically isolated and will be transmitted with a resolution of 12 bits.

Outputs are short circuit protected.

The internal system supply is used for the power supply of the module.

The output channels have one common ground potential.

Description	Item No.	Pack. Unit
2AO 0-10V DC	**750-550**	1
2AO ± 10V DC	**750-556**	1
2AO 0-10V DC/S5 [1]	**750-550/000-200**	1
2AO ±10V DC/S5 [1]	**750-556/000-200**	1
2AO 0-10V DC (without connector)	**753-550**	1
2AO ±10V DC (without connector)	**753-556**	1

[1] Data format for S5 control with FB 251

Accessories	Item No.	Pack. Unit
753 Series Connectors	**753-110**	25
Coding elements	**753-150**	100
Miniature WSB Quick marking system		
plain	**248-501**	5
with marking	see Section 11	

Approvals

Conformity marking	CE
Korea Certification	
Marine applications (versions upon request)	ABS, BV, DNV, GL, KR, LR, NKK, PRS, RINA
cULus UL 508	
cULus ANSI/ISA 12.12.01	Class I, Div. 2, Grp. ABCD, T4
TÜV 07 ATEX 554086 X	I M2 Ex d I Mb, II 3 G Ex nA IIC T4 Gc, II 3 D Ex tc IIIC T135°C Dc
IECEx TUN 09.0001 X	Ex d I Mb, Ex nA IIC T4 Gc, Ex tc IIIC T135°C Dc

Technical Data

No. of outputs	2
Current consumption (internal)	65 mA
Power supply	via system voltage DC/DC
Signal voltage	0 - 10V (750-550 / 753-550)
	± 10V (750-556 / 753-556)
Load impedance	> 5 kΩ
Linearity	±10 mV
Resolution	12 bits
Conversion time	approx. 2 ms
Recovery time (typ.)	300 µs
Measuring error (25 °C)	< ± 0.1 % of the full scale value
Temperature coefficient	< ± 0.01 % /K of the full scale value
Isolation	500 V system/supply
Bit width	2 x 16 bits data
	2 x 8 bits control/status (option)
Wire connection	CAGE CLAMP®
Cross sections	0.08 mm² ... 2.5 mm² / AWG 28 ... 14
Strip lengths, 750/753 Series	8 ... 9 mm / 0.33 in
	9 ... 10 mm / 0.37 in
Width	12 mm
Weight	48.8 g
EMC immunity of interference	acc. to EN 61000-6-2, marine applications
EMC emission of interference	acc. to EN 61000-6-4, marine applications

2-Channel Analog Output Module, 0 ... 10 V / -10 ... +10 V DC

16 bits, configurable

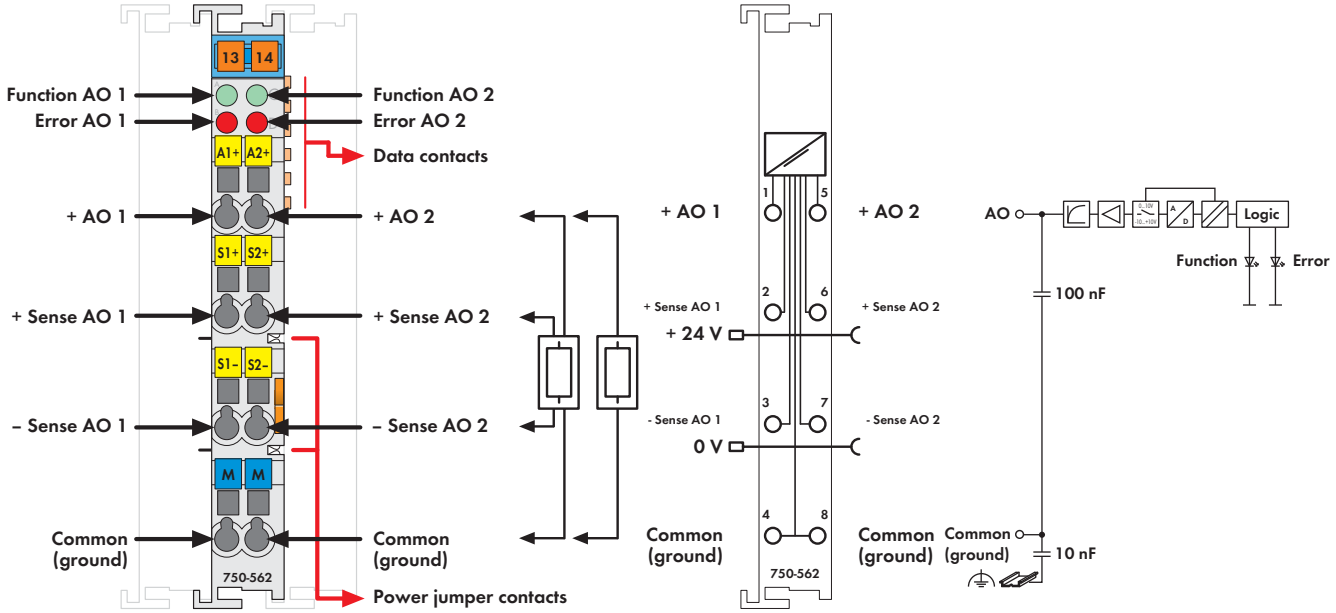

Delivered without miniature WSB markers

The 750-562 Analog Output Module generates output voltages ranging from 0-10V or ±10V for the field.
Output areas can be configured via WAGO-I/O-CHECK or GSD files.
The module has two short circuit-proof output channels and enables the direct connection of two 2-wire actuators to AO 1 and ground or AO 2 and ground. The output of the signals occurs via AO 1 or AO 2. In addition, the sense lines from 4-wire actuators can be connected to -Sense AO1 and +Sense AO1 or -Sense AO2 and +Sense AO2.

Both output channels have a common ground potential.
The output signal is electrically isolated and transmitted with a resolution of 16 bits.
The internal system supply powers the module.
The field power supply is only forwarded to the downstream I/O modules.

Description	Item No.	Pack. Unit
2 AO 0/+-10V DC 16 Bit	**750-562**	1

Accessories		Item No.	Pack. Unit
Miniature WSB Quick marking system			
	plain	**248-501**	5
	with marking	see Section 11	

Approvals

Conformity marking	CE
Korea Certification	
UL 508	
ANSI/ISA 12.12.01	Class I, Div. 2, Grp. ABCD, T4
TÜV 07 ATEX 554086 X	I M2 Ex d I Mb,
	II 3 G Ex nA IIC T4 Gc,
	II 3 D Ex tc IIIC T135°C Dc
IECEx TUN 09.0001 X	Ex d I Mb,
	Ex nA IIC T4 Gc,
	Ex tc IIIC T135°C Dc

Technical Data

No. of outputs	2
Current consumption (internal)	80 - 170 mA
Voltage via power jumper contacts	24 V DC (-15 % ... +20 %)
Signal voltage	0 V ... 10 V (switchable)
	-10 V ... +10 V (switchable)
Load impedance	> 5 kΩ
Resolution	16 bits
Conversion time (typ.)	5 ms
Recovery time (typ.)	< 300 µs
Measuring error (25 °C)	< ± 0.05 % of the scale end value
Temperature coefficient	< ± 100ppm
Isolation	500 V system/supply
Bit width	2 x 16 bits data
	2 x 8 bits control/status (option)
Wire connection	CAGE CLAMP®
Cross sections	0.08 mm² ... 2.5 mm² / AWG 28 ... 14
Width	12 mm
Weight	53.5 g
EMC immunity of interference	acc. to EN 61131-2
EMC emission of interference	acc. to EN 61131-2

4-Channel Analog Output Module ±10 V/0-10 V

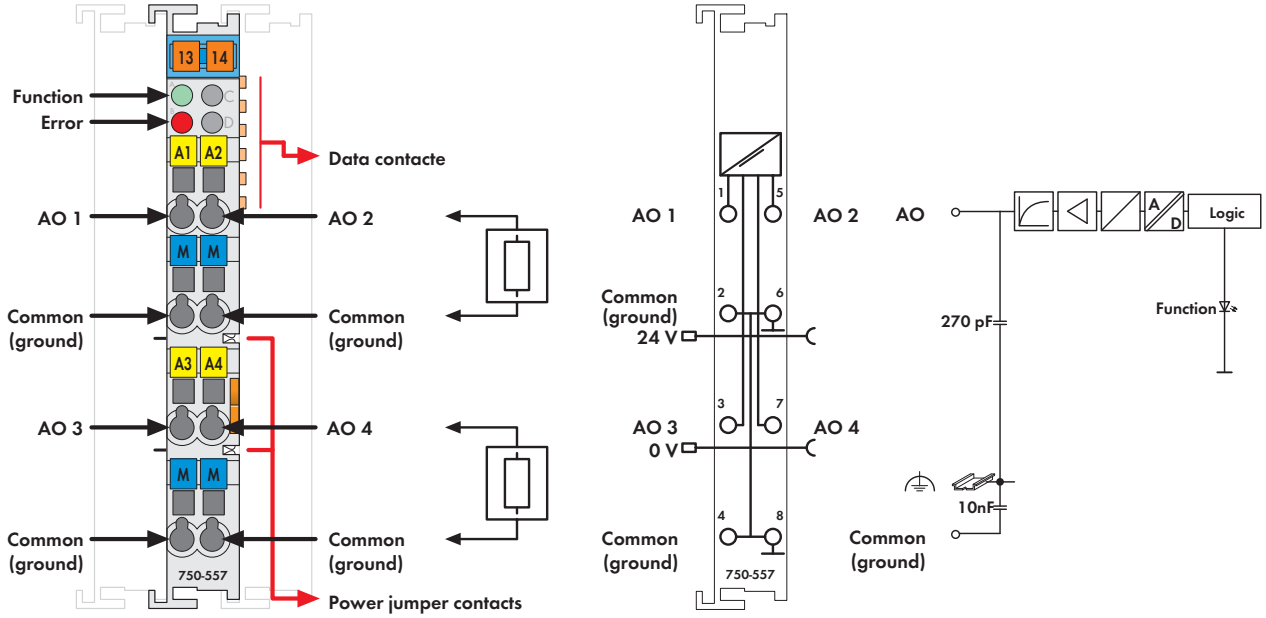

Fig. 750 Series
Delivered without miniature WSB markers

The analog output module creates a standardized signal of ±10V or 0-10V.

The output signal is electrically isolated and will be transmitted with a resolution of 12 bits.

The system voltage supply is used for the power supply of the module.

The output channels of the module have one common potential.

Description	Item No.	Pack. Unit
4AO ± 10V DC	**750-557**	1
4AO 0-10V DC	**750-559**	1
4AO 0-10V DC/T	**750-559/025-000**	1
Extended temperature range: -20 °C ... +60 °C		
4AO ±10V DC (without connector)	**753-557**	1
4AO 0-10V DC (without connector)	**753-559**	1

Accessories

	Item No.	Pack. Unit
753 Series Connectors	**753-110**	25
Coding elements	**753-150**	100
Miniature WSB Quick marking system		
plain	**248-501**	5
with marking	see Section 11	

Approvals

Conformity marking	CE
Korea Certification	
Marine applications (versions upon request)	ABS, BV, DNV, GL, KR, LR, NKK, PRS, RINA
cULus UL 508	
cULus ANSI/ISA 12.12.01	Class I, Div. 2, Grp. ABCD, T4
TÜV 07 ATEX 554086 X	I M2 Ex d I Mb, II 3 G Ex nA IIC T4 Gc, II 3 D Ex tc IIIC T135°C Dc
IECEx TUN 09.0001 X	Ex d I Mb, Ex nA IIC T4 Gc, Ex tc IIIC T135°C Dc

Technical Data

No. of outputs	4
Max. current consumption (internal)	125 mA
Power supply	via system voltage DC/DC
Signal voltage	± 10V (750-557 / 753-557)
	0 - 10V (750-559 / 753-559)
Load impedance	> 5 kΩ
Resolution	12 bits
Conversion time (typ.)	10 ms
Recovery time (typ.)	100 ms
Measuring error (25 °C)	< ± 0.1 % of the full scale value
Temperature coefficient	< ± 0.01 % /K of the full scale value
Isolation	500 V system/supply
Bit width	4 x 16 bits data
	4 x 8 bits control/status (option)
Wire connection	CAGE CLAMP®
Cross sections	0.08 mm² ... 2.5 mm² / AWG 28 ... 14
Strip lengths, 750/753 Series	8 ... 9 mm / 0.33 in
	9 ... 10 mm / 0.37 in
Width	12 mm
Weight	53.5 g
EMC immunity of interference	acc. to EN 61000-6-2, marine applications
EMC emission of interference	acc. to EN 61000-6-4, marine applications

2-Channel Analog Output Module 0-10 V

10 bits, 10 mA

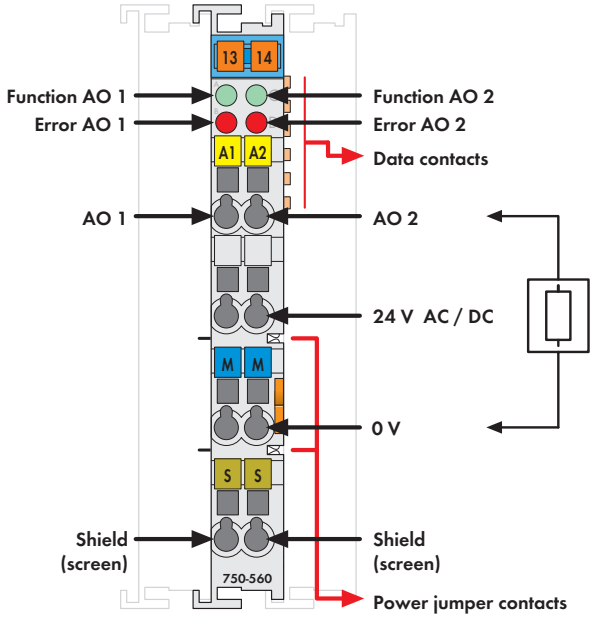

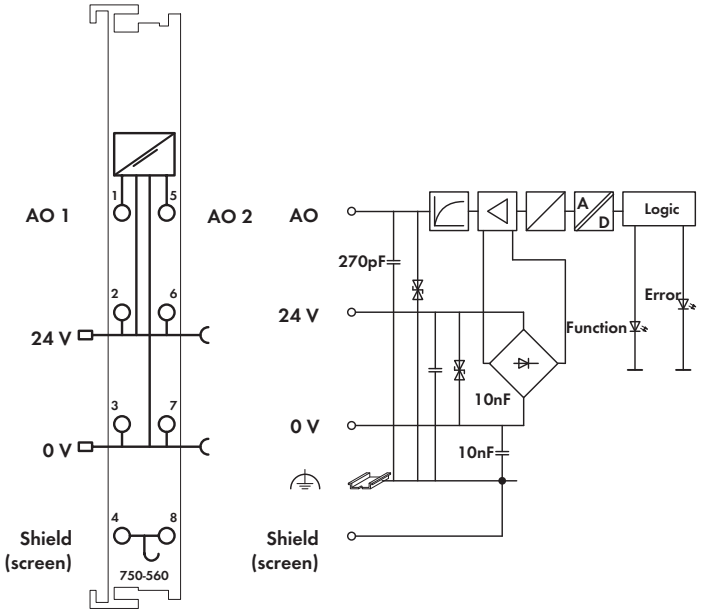

Delivered without miniature WSB markers

The analog output module creates a standardized signal of 0-10V.
The output signal is electrically isolated and will transmit with a 8-bit resolution.
Outputs are short circuit protected.
Each channel is equipped with a LED to indicate short-circuits or overloads ≥ 15mA.
The shield (screen) is directly connected to the DIN rail.
Both the internal system and field side supply are used to power the module.

The output channels have one common ground potential.

The analog outputs and the 24V supply have one common ground potential so that actuators such as servo drives can be connected using a 3-conductor cable.

Description	Item No.	Pack. Unit
2AO 0-10 V DC 10 Bit 10mA 24V	**750-560**	1

Accessories		Item No.	Pack. Unit
Miniature WSB Quick marking system			
	plain	**248-501**	5
	with marking	see Section 11	

Approvals

Conformity marking	CE
Korea Certification	
UL 508	
ANSI/ISA 12.12.01	Class I, Div. 2, Grp. ABCD, T4
TÜV 07 ATEX 554086 X	I M2 Ex d I Mb, II 3 G Ex nA IIC T4 Gc, II 3 D Ex tc IIIC T135°C Dc
IECEx TUN 09.0001 X	Ex d I Mb, Ex nA IIC T4 Gc, Ex tc IIIC T135°C Dc

Technical Data

No. of outputs	2
Current consumption (internal)	16 mA
Voltage via power jumper contacts	24 V AC/DC
Signal voltage	0 V ... 10 V
Load impedance	≥ 1 kΩ
Resolution	10 bits
Conversion time	approx. 10 ms
Measuring error (25 °C)	< ± 0.2 % of the full scale value
Temperature coefficient	< ± 0.02 % /K of the full scale value
Isolation	500 V system/supply
Bit width	2 x 16 bits data 2 x 8 bits control/status (option)
Wire connection	CAGE CLAMP®
Cross sections	0.08 mm² ... 2.5 mm² / AWG 28 ... 14
Strip lengths	8 ... 9 mm / 0.33 in
Width	12 mm
Weight	53.5 g
EMC immunity of interference	acc. to EN 61000-6-2
EMC emission of interference	acc. to EN 61000-6-4

Housing Design 750/753 Series	
Dimensions (mm) W x H x L	12 x 65 x 100 (Height from upper edge of the DIN-rail)
Wire connection	CAGE CLAMP®
Cross sections	0.08 mm² ... 2.5 mm² / 28 ... 14 AWG
Strip lengths	750 Series: 8 ... 9 mm / 0.33 in. 753 Series: 9 ... 10 mm / 0.37 in.

Housing Design Double Width	
Dimensions (mm) W x H x L	24 x 65 x 100 (Height from upper edge of the DIN-rail)

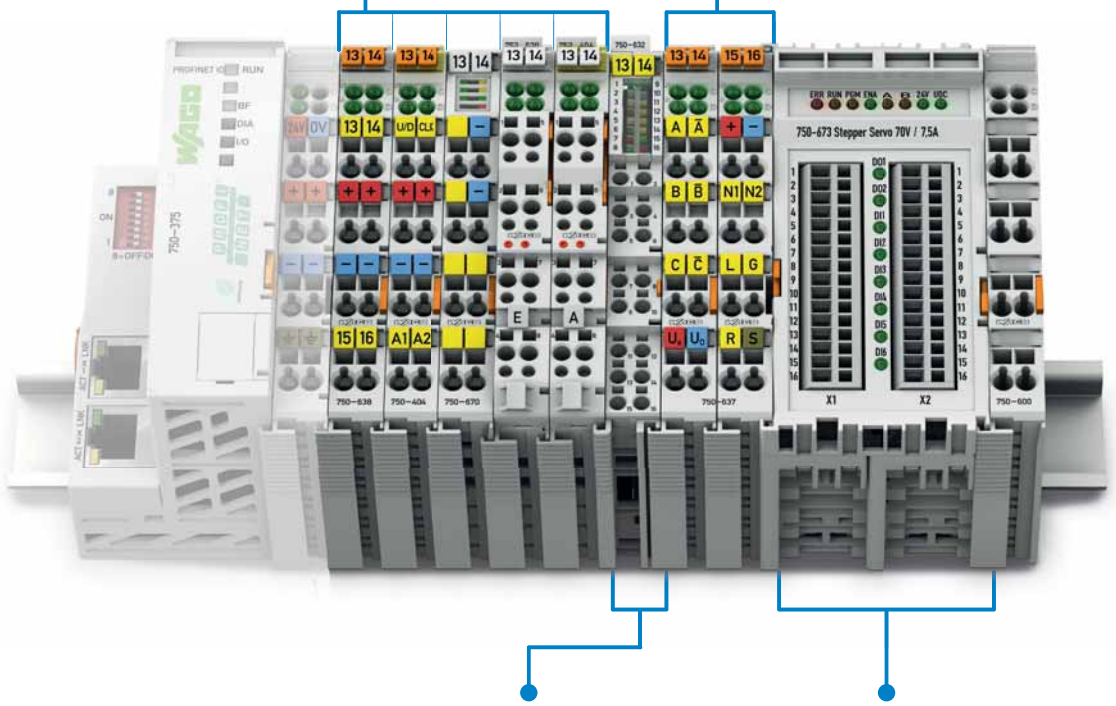

Housing Design 750 Series with Push-in CAGE CLAMP® Connection (16 Connection Terminals)	
Dimensions (mm) W x H x L	12 x 65 x 100 (Height from upper edge of the DIN-rail)
Wire connection	Push-in CAGE CLAMP®
Cross sections	solid: 0.08 mm² ... 2.5 mm² / 28 ... 16 AWG fine-stranded: 0.25 mm² ... 1.5 mm² / 22 ... 16 AWG
Strip lengths	8 ... 9 mm / 0.33 in.

Special Housing Design 750 Series	
Dimensions (mm) W x H x L	51 x 70 x 100 (Height from upper edge of the DIN-rail)
Wire connection	CAGE CLAMP®
Cross sections	0.08 mm² ... 1.5 mm² / 28 ... 14 AWG
Strip lengths	5 ... 6 mm / 0.22 in.

I/O-Systems; Function and Technology Modules
Contents

Function	Description	Item No.			Page
		Standard	/T Extended operating temperature range: -20 °C ... +60 °C	Pluggable	
Counter Modules	Up/Down Counter, 24 VDC, 100 kHz	750-404		753-404	292
	Up Counter/Enable Input	750-404/000-001			292
	Peak Time Counter	750-404/000-002			292
	Frequency Counter 0.1 Hz - 100 kHz	750-404/000-003		753-404/000-003	292
	Up/Down Counter/Switch Output	750-404/000-004			292
	2 Up Counter/16 bits / 5 kHz	750-404/000-005		753-404/000-005	292
	Up/Down Counter, 24 VDC/16 bits /500 Hz	750-638	750-638/025-000	753-638	293
Pulse Width Modules	2DO 24V DC 0.1A/Pulse Width	750-511		753-511	294
	2DO 24V DC 0.1A/Frequency/2kHz	750-511/000-001			294
	2DO 24V DC 0.1A/Pulse Width/100Hz	750-511/000-002			294
Distance and Angle Measurement Modules	SSI Transmitter Interface, 24 bits, 125 kHz, gray	750-630			295
	SSI Transmitter Interface, 24 bits, 125 kHz, bin	750-630/000-001			295
	SSI Transmitter Interface, 24 bits, 250 kHz, bin	750-630/000-002			295
	SSI Transmitter Interface, 24 bits, 125 kHz, gray, status	750-630/000-004			295
	SSI Transmitter Interface, 15 bits, 125 kHz, gray, status	750-630/000-005			295
	SSI Transmitter Interface, 24 bits, 250 kHz, gray	750-630/000-006			295
	SSI Transmitter Interface, 25 bits, 125 kHz, gray	750-630/000-008			295
	SSI Transmitter Interface, 13 bits, 250 kHz, bin	750-630/000-009			295
	SSI Transmitter Interface, 25 bits, 125 kHz, bin	750-630/000-011			295
	SSI Transmitter Interface, 13 bits, 125 kHz, gray	750-630/000-012			295
	SSI Transmitter Interface, 29 bits, 125 kHz, bin	750-630/000-013			295
	SSI Transmitter Interface, configurable	750-630/003-000			295
	Inkremental Encoder Interface RS-422	750-631/000-004			296
	Inkremental Encoder Interface	750-637			297
	Inkremental Encoder Interface, 24 V, 32 bits differential	750-637/000-001			297
	Inkremental Encoder Interface, 24 V, 32 bits single ended	750-637/000-002			297
	Inkremental Encoder Interface, RS-422, 32 bits, single interpreter	750-637/000-003			297
	Inkremental Encoder Interface, 24 V, 32 bits single ended, cam outputs	750-637/000-004			297
	Digital Impulse Interface	750-635		753-635	298
RTC Module	RTC Module, Real-Time Clock	750-640			299
Vibration Monitoring	2-Channel Vibration Velocity/Bearing Condition Monitoring VIB I/O	750-645			300
Stepper Modules	Stepper Controller RS-422, 24 V, 20 mA	750-670			302
	Stepper Controller 24 V, 1,5 A	750-671			303
	Stepper Controller 70 V, 7,5 A, 6 IN, 2 OUT	750-672			304
	Servo Stepper Controller 70 V, 7,5 A, 6 IN, 2 OUT	750-673			306
DC-Drive Controllers	DC-Drive Controller, 24 V, 5 A	750-636	750-636/025-000		308
	DC-Drive Controller, 24 V, 5 A, external motor voltage	750-636/000-700			308
	DC-Drive Controller, 24 V, 5 A, interference-free	750-636/000-800			308
Proportional Valve Module	Proportional Valve Module	750-632			310
Ex i		see Section 4.9			

Up/Down Counter 24 V DC, 100 kHz

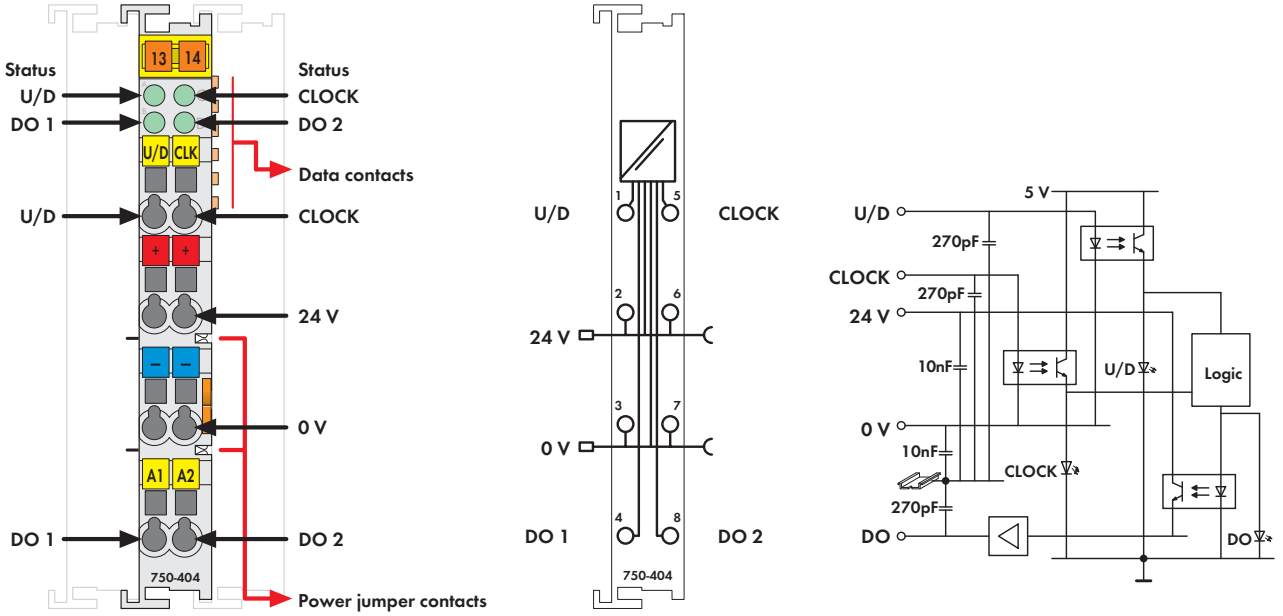

Fig. 750 Series
Delivered without miniature WSB markers

The up/down counter is capable of counting binary pulses of 24VDC and then transmits the data to the fieldbus.

The U/D input allows either Up or Down counting.

Digital outputs DO 1 and DO 2 can be set using the control byte.

The counter can be set or reset with the control byte.

A counter lock-out is also possible.

Differing technical data 750-404/000-003
- Measuring error < ± 0.2 % (measuring range 0.1 Hz ... 10 kHz)
- Measuring error < ± 1.5 % (measuring range 0.1 Hz ... 100 kHz)

Differing technical data 750-404/000-005
- Switching rate max. : 5 kHz
- Counter depth: 2 x 16 bits
- Internal bit width: 2 x 16 bits data

Description	Item No.	Pack. Unit
Up/Down Counter/100 kHz	**750-404**	1
Up Counter/Enable Input	**750-404/000-001**	1
Counter with enable input (Gate), U/D input serves as Gate input		
Peak Time Counter	**750-404/000-002**	1
Frequency Counter 0.1 Hz - 100 kHz	**750-404/000-003**	1
Frequency measurement, U/D input serves as Gate input		
Up/Down Counter/Switch Output	**750-404/000-004**	1
Counter with digital outputs (output switches depending on the count of the counter)		
2 Up Counter/16 Bit / 5 kHz	**750-404/000-005**	1
U/D input serves as Clock input of the 2nd counter		
Up/Down Counter, 100 Hz (without connector)	**753-404**	1
Frequency Counter	**753-404/000-003**	1
Frequency measurement, U/D input serves as Gate input		
2 Up Counter/16 Bit / 5 kHz (without connector)	**753-404/000-005**	1
U/D input serves as Clock input of the 2nd counter		

Approvals

Conformity marking	CE
Korea Certification	
Marine applications (versions upon request)	ABS, BV, DNV, GL, KR, LR, NKK, PRS, RINA
UL 508	
ANSI/ISA 12.12.01	Class I, Div. 2, Grp. ABCD, T4
TÜV 07 ATEX 554086 X	I M2 Ex d I Mb, II 3 G Ex nA IIC T4 Gc, II 3 D Ex tc IIIC T135°C Dc
IECEx TUN 09.0001 X	Ex d I Mb, Ex nA IIC T4 Gc, Ex tc IIIC T135°C Dc

Technical Data

No. of outputs	2
No. of counters	1
Current consumption (internal)	70 mA
Voltage via power jumper contacts	24 V DC (-15 % ... +20 %)
Output current	0.5 A short-circuit protected
Signal voltage (0)	-3 V ... +5 V DC
Signal voltage (1)	15 V ... 30 V DC
Max. switching frequency	100 kHz
Input current (typ.)	5 mA
Counter depth	32 bits
Isolation	500 V system/supply
Internal bit width	32 bits data
	8 bits control/status
Wire connection	CAGE CLAMP®
Cross sections	0.08 mm² ... 2.5 mm² / AWG 28 ... 14
Strip lengths, 750/753 Series	8 ... 9 mm / 0.33 in
	9 ... 10 mm / 0.37 in
Width	12 mm
Weight	51 g
EMC immunity of interference	acc. to EN 61000-6-2, marine applications
EMC emission of interference	acc. to EN 61000-6-4, marine applications

Accessories

Accessories	Item No.	Pack. Unit
753 Series Connectors	**753-110**	25
Coding elements	**753-150**	100
Miniature WSB Quick marking system	see Section 11	

2-Channel Up/Down Counter 24 V DC, 500 Hz

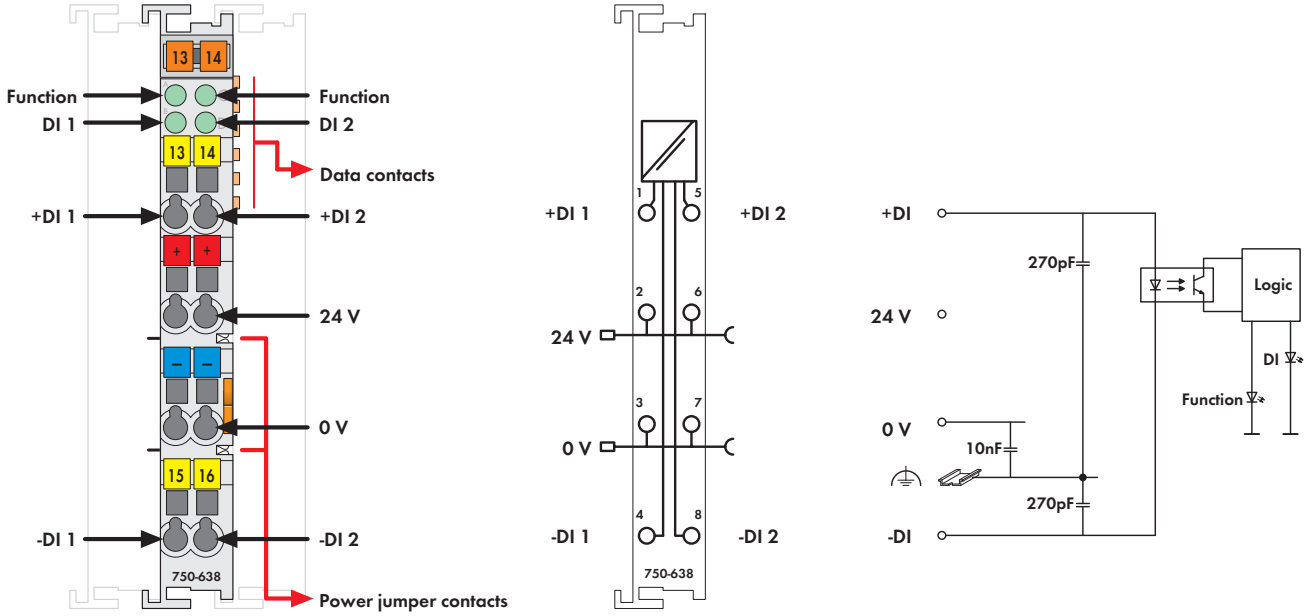

Fig. 750 Series
Delivered without miniature WSB markers

The I/O module has two counters that count 24VDC binary pulses independently of one another. The data is then transmitted to the control via the fieldbus.

The counters can be set or reset with the control bytes. A counter lock-out is also possible.

The control bytes also determine the direction of counting.

Description	Item No.	Pack. Unit
2-Channel Up/Down Counter, 500 Hz	**750-638**	1
2-Channel Up/Down Counter, 500 Hz/T	**750-638/025-000**	1
Extended temperature range: -20 °C ... +60 °C		
2-Channel Up / Down Counter, 500 Hz (without connector)	**753-638**	1

Accessories

	Item No.	Pack. Unit
753 Series Connectors	**753-110**	25
Coding elements	**753-150**	100
Miniature WSB Quick marking system		
plain	**248-501**	5
with marking	see Section 11	

Approvals

Conformity marking	CE
Korea Certification	KC
cULus UL 508	
cULus ANSI/ISA 12.12.01	Class I, Div. 2, Grp. ABCD, T4
TÜV 12.1297 X (Brazil)	Ex nA IIC T4 Gc (750-638)
TÜV 07 ATEX 554086 X	I M2 Ex d I Mb, II 3 G Ex nA IIC T4 Gc, II 3 D Ex tc IIIC T135°C Dc
IECEx TUN 09.0001 X	Ex d I Mb, Ex nA IIC T4 Gc, Ex tc IIIC T135°C Dc

Technical Data

No. of counters	2
Current consumption typ. (internal)	10 mA
Voltage via power jumper contacts	24 V DC (-15 % ... +20 %)
Signal voltage (0)	-3 V ... +5 V DC (acc. to EN 61131 type 1)
Signal voltage (1)	15 V ... 30 V DC (acc. to EN 61131 type 1)
Common mode voltage (max.)	500 V DC
Minimum pulse width (0, 1)	1 ms
Input filter	0.2 ms
Sensor connection	differential
Max. switching frequency	500 Hz
Counter depth	16 bits
Isolation	500 V system/supply
Current consumption typ. (field side)	8 mA
Internal bit width	2 x 16 bits data
	2 x 8 bits control/status (optional)
Wire connection	CAGE CLAMP®
Cross sections	0.08 mm² ... 2.5 mm² / AWG 28 ... 14
Strip lengths, 750/753 Series	8 ... 9 mm / 0.33 in
	9 ... 10 mm / 0.37 in
Width	12 mm
Weight	58 g
EMC immunity of interference	acc. to EN 61000-6-2
EMC emission of interference	acc. to EN 61000-6-4

2-Channel Pulse Width Output Module 24 V DC

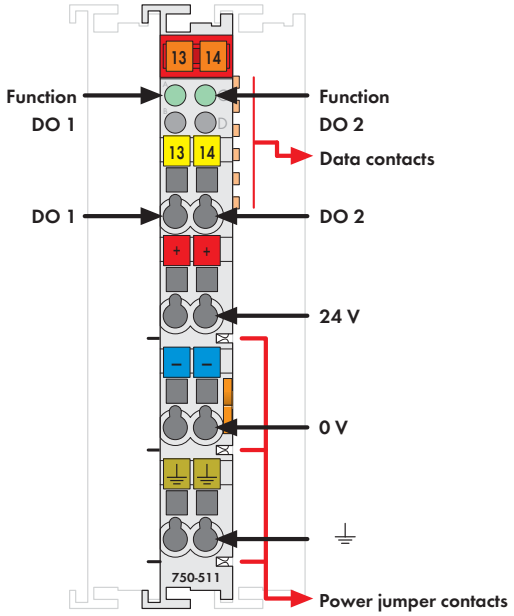

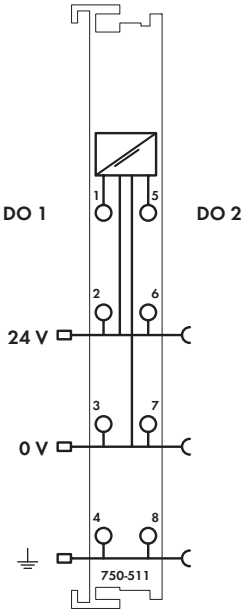

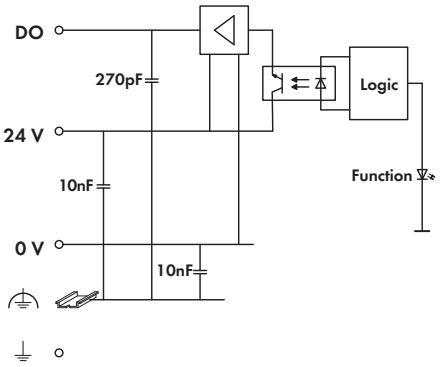

Delivered without miniature WSB markers

This output module is able to modulate an output with a resolution of 16 bits, with a constant frequency. The field side is electrically isolated from the bus system.

The pulse-width repetition rate is given by a 16-bit value.

The outputs are short-circuit proof.

Description	Item No.	Pack. Unit
2DO 24V DC 0.1A/Pulse Width	**750-511**	1
2DO 24V DC 0.1A/Frequency/2kHz	**750-511/000-001**	1
Frequency counter, pulse frequency/pulse duty factor 2 Hz ... 2 kHz / 50 %		
2DO 24V DC 0.1A/Pulse Width/100Hz	**750-511/000-002**	1
Pulse frequency 100 Hz		
2DO 24V DC 0.1A/Pulse Width (without connector)	**753-511**	1

Accessories	Item No.	Pack. Unit
753 Series Connectors	**753-110**	25
Coding elements	**753-150**	100
Miniature WSB Quick marking system		
plain	**248-501**	5
with marking	see Section 11	

Approvals

Conformity marking	CE
Korea Certification	
UL 508	
ANSI/ISA 12.12.01	Class I, Div. 2, Grp. ABCD, T4
TÜV 07 ATEX 554086 X	I M2 Ex d I Mb, II 3 G Ex nA IIC T4 Gc, II 3 D Ex tc IIIC T135°C Dc
IECEx TUN 09.0001 X	Ex d I Mb, Ex nA IIC T4 Gc, Ex tc IIIC T135°C Dc

Technical Data

No. of outputs	2
Current consumption (internal)	70 mA
Voltage via power jumper contacts	24 V DC (-15 % ... +20 %)
Output current	0.1 A short-circuit protected
Type of load	resistive, inductive
Pulse frequency	250 Hz
Pulse duty factor	0 % ... 100 %
Resolution	10 bits
Isolation	500 V system/supply
Current consumption typ. (field side)	15 mA
Internal bit width	2 x 16 bits data
	2 x 8 bits control/status (optional)
Wire connection	CAGE CLAMP®
Cross sections	0.08 mm² ... 2.5 mm² / AWG 28 ... 14
Strip lengths, 750/753 Series	8 ... 9 mm / 0.33 in
	9 ... 10 mm / 0.37 in
Width	12 mm
Weight	38 g
EMC immunity of interference	acc. to EN 61000-6-2
EMC emission of interference	acc. to EN 61000-6-4

SSI Transmitter Interface

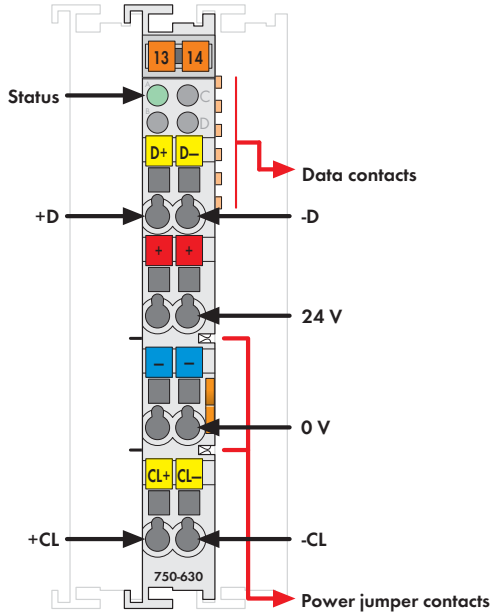

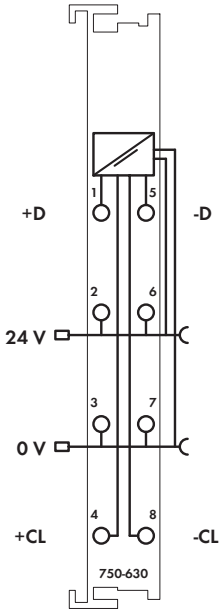

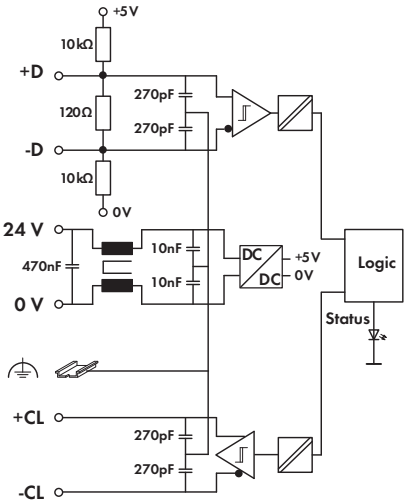

Delivered without miniature WSB markers

This module is an SSI interface for the direct connection to an SSI transmitter.

After the interface has given a clock pulse to the sensor, the interface reads the incoming data and transmits it directly in the form of a data word into the process image of the PLC or PC. It is possible to factory adjust different operating modes, transfer frequencies and bit widths by means of the control register.

The power supply for the transmitter is derived internally from the power jumper contacts.

Description	Item No.	Pack. Unit
SSI/ 24Bit/ 125kHz/ Gray	**750-630**	1
SSI/ 24Bit/ 125kHz/ Bin	**750-630/000-001**	1
SSI/ 24Bit/ 250kHz/ Bin	**750-630/000-002**	1
SSI/ 24Bit/ 125kHz/ Gray/ Status	**750-630/000-004**	1
SSI/ 15Bit/ 125kHz/ Gray/ Status	**750-630/000-005**	1
SSI/ 24Bit/ 250kHz/ Gray	**750-630/000-006**	1
SSI/ 25Bit/ 125kHz/ Gray	**750-630/000-008**	1
SSI/ 13Bit/ 250kHz/ Bin	**750-630/000-009**	1
SSI/ 25Bit/ 125kHz/ Bin	**750-630/000-011**	1
SSI/ 13Bit/ 125kHz/ Gray	**750-630/000-012**	1
SSI/ 29Bit/ 125kHz/ Bin	**750-630/000-013**	1
SSI/ Configurable	**750-630/003-000**	1

Accessories	Item No.	Pack. Unit
Miniature WSB Quick marking system		
plain	**248-501**	5
with marking	see Section 11	

Approvals

Conformity marking	CE
Korea Certification	
Marine applications (versions upon request)	GL
cULus UL 508	
cULus ANSI/ISA 12.12.01	Class I, Div. 2, Grp. ABCD, T4
TÜV 07 ATEX 554086 X	I M2 Ex d I Mb, II 3 G Ex nA IIC T4 Gc, II 3 D Ex tc IIIC T135°C Dc
IECEx TUN 09.0001 X	Ex d I Mb, Ex nA IIC T4 Gc, Ex tc IIIC T135°C Dc

Technical Data

Sensor connection	In + D, -D / Out + CI, - CI
Current consumption typ. (internal)	20 mA
Voltage via power jumper contacts	24 V DC (-15 % ... +20 %)
Sensor supply	24 V DC via power jumper contacts
Baud rate	125 kHz (max. 250 kHz 750-630/003-000)
serial input	32 bits (bit width)
Signal output	differential signal (RS 422)
Signal input	differential signal (RS 422)
Code	Graycode
Isolation	500 V system/supply
Internal bit width	1 x 32 bits 1 x 8 bits control/status (option) (24 bits data, 8 bits reserved)
Wire connection	CAGE CLAMP®
Cross sections	0.08 mm² ... 2.5 mm² / AWG 28 ... 14
Strip lengths	8 ... 9 mm / 0.33 in
Width	12 mm
Weight	46.5 g
EMC immunity of interference	acc. to EN 61000-6-2, marine applications
EMC emission of interference	acc. to EN 61000-6-4, marine applications

Incremental Encoder Interface

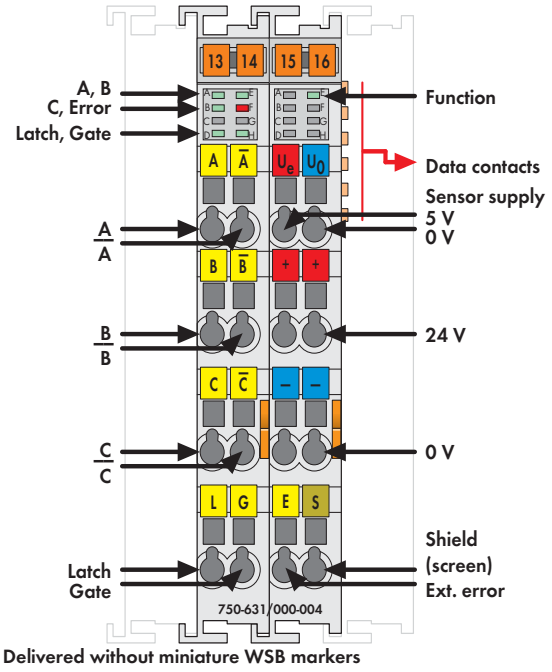

Delivered without miniature WSB markers

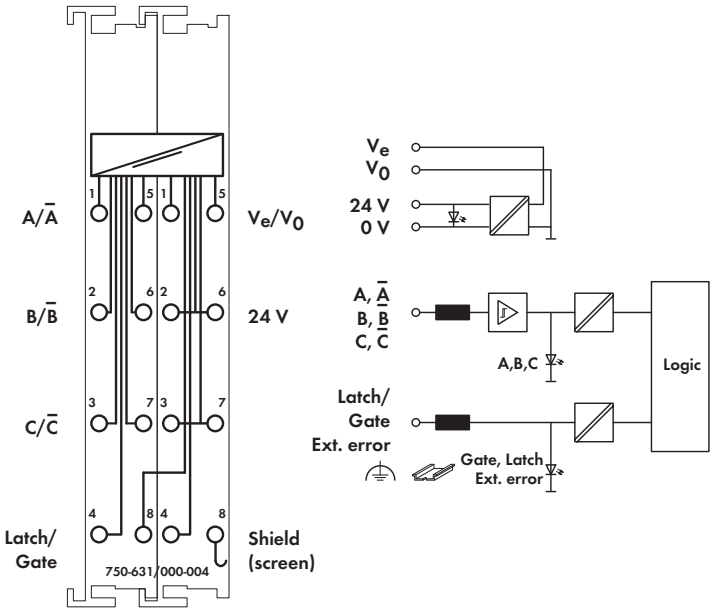

This module is an interface for connection of any incremental encoder.

A 16 bit counter with quadrature encoder interface as well as a 16 bit latch for the zero impulse can be read, set, or enabled. The count of the counter will be transmitted fast and interference-free over the fieldbus to the PC, PLC, or NC.

A counter lock-out is possible using input G.

The power supply for the transmitter is derived internally from the power jumper contacts Ue/U0.

The shield (screen) is directly connected to the DIN rail.

Description	Item No.	Pack. Unit
Incremental Encoder Interface RS-422	**750-631/000-004**	1

Accessories		Item No.	Pack. Unit
Miniature WSB Quick marking system			
	plain	**248-501**	5
	with marking	see Section 11	

Approvals

Conformity marking	CE
UL 508	
ANSI/ISA 12.12.01	Class I, Div. 2, Grp. ABCD, T4
DEKRA 11 ATEX 0203 X	II 3 G Ex nA II T4

Technical Data

Sensor connection	A, A/, B, B/, C, C/ (RS-422 inputs)
Current consumption (internal)	50 mA
Counter	16 bits binary
Max. operating frequency	1000 kHz
Quadrature decoder	4-fold report
Zero impulse latch	16 bits
Commands	read, set, enable
Power supply	24 V DC (-15 % ... +20 %)
Current consumption (typ.)	10 mA without sensor
Operating voltage of sensor	5 VDC
Sensor max. output current	200 mA
Signal voltage (0)	V_{ABC} = 0 V, $V_{ABC/}$ = 5 V Latch, Gate ≤ 5.0 V, Ext. error V ≥ 5.0 V or input open
Signal voltage (1)	V_{ABC} = 5 V, $V_{ABC/}$ = 0 V Latch, Gate ≥ 15.0 V, Ext. error V < 0.5 V
Isolation	500 V system/supply
Internal bit width	1 x 32 bits data, 1 x 8 bits control/status, 1 x 8 bits reserved
Wire connection	CAGE CLAMP®
Cross sections	0.08 mm² ... 2.5 mm² / AWG 28 ... 14
Strip lengths	8 ... 9 mm / 0.33 in
Width	24 mm
Weight	100 g
EMC immunity of interference	acc. to EN 61000-6-2
EMC emission of interference	acc. to EN 61000-6-4

Incremental Encoder Interface

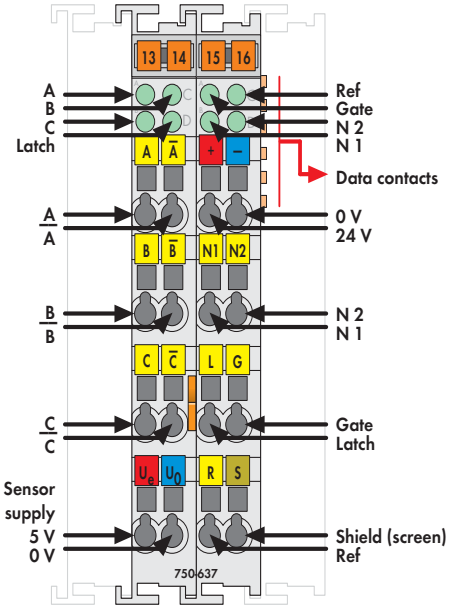

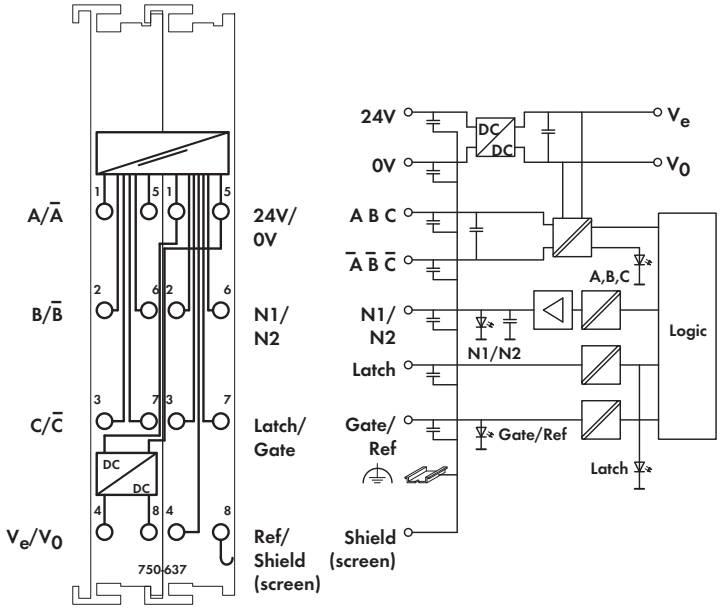

Delivered without miniature WSB markers

This module is an interface for incremental encoders with standard connections (e.g., RS-422, differential, single-ended).

A counter with quadrature decoder as well as a latch for the zero impulse can be read or enabled by the control. The control can set the counter or transmit the counter value to the Latch. As an alternative this can also be done using input "C" or "Latch".

The frequency data is automatically acquired and can also be transmitted to the control.

A counter lock-out is possible using input G. Input "Ref" can be used to activate the initial point "C" function.

The cam outputs N1 and N2 indicate whether the counter value is within a defined range of values. The range can be adjusted.

The module must be powered using an external 24VDC power supply, from which power to the transmitter (Ue, U1) can also be derived.

The shield (screen) is directly connected to the DIN rail.

Description	Item No.	Pack. Unit
Incremental Encoder Interface RS422/32Bit	**750-637**	1
Incremental Encoder Interface 24V/32Bit differential	**750-637/000-001**	1
Incremental Encoder Interface 24V/32Bit single ended	**750-637/000-002**	1
Inkremental-Encoder-Interface RS422/32Bit/Single Interpreter	**750-637/000-003**	1
Incremental Encoder Interface 24V/32Bit single ended/cam outputs	**750-637/000-004**	1

Accessories		Item No.	Pack. Unit
Miniature WSB Quick marking system			
	plain	**248-501**	5
	with marking	see Section 11	

Approvals

Conformity marking	CE
Korea Certification	
Marine applications (versions upon request)	ABS, BV, DNV, GL, KR, LR, NKK, PRS, RINA
cULus UL 508	
cULus ANSI/ISA 12.12.01	Class I, Div. 2, Grp. ABCD, T4
TÜV 12.1297 X (Brazil)	Ex nA IIC T4 Gc (750-637)
TÜV 07 ATEX 554086 X	I M2 Ex d I Mb, II 3 G Ex nA IIC T4 Gc, II 3 D Ex tc IIIC T135°C Dc
IECEx TUN 09.0001 X	Ex d I Mb, Ex nA IIC T4 Gc, Ex tc IIIC T135°C Dc

Technical Data

Sensor connection	A, A/, B, B/, C, C/
Current consumption (internal)	110 mA
Counter	32 bits binary
Max. operating frequency	250 kHz
Quadrature decoder	4-fold report
Zero impulse latch	32 bits
Commands	read, set, enable
Power supply	24 V DC (-15 % ... +20 %)
Current consumption (typ.)	35 mA without load
Operating voltage of sensor	5 VDC
Sensor max. output current	300 mA
Internal bit width	1 x 32 bits data
	1 x 8 bits control/status
Digital outputs (N1, N2)	
Output voltage	24 V DC
Output current (max.)	0.5 A short-circuit protected
Digital inputs (Latch, Gate, Ref)	
Signal voltage (0)	-3 V ... +5 V DC
Signal voltage (1)	15 V ... 30 V DC
Input current (typ.)	Latch 5 mA, Gate 7 mA, Ref. 7 mA
Wire connection	CAGE CLAMP®
Cross sections	0.08 mm² ... 2.5 mm² / AWG 28 ... 14
Strip lengths	8 ... 9 mm / 0.33 in
Width	24 mm
Weight	103.3 g
EMC immunity of interference	acc. to EN 61000-6-2, marine applications
EMC emission of interference	acc. to EN 61000-6-4, marine applications

Digital Impulse Interface

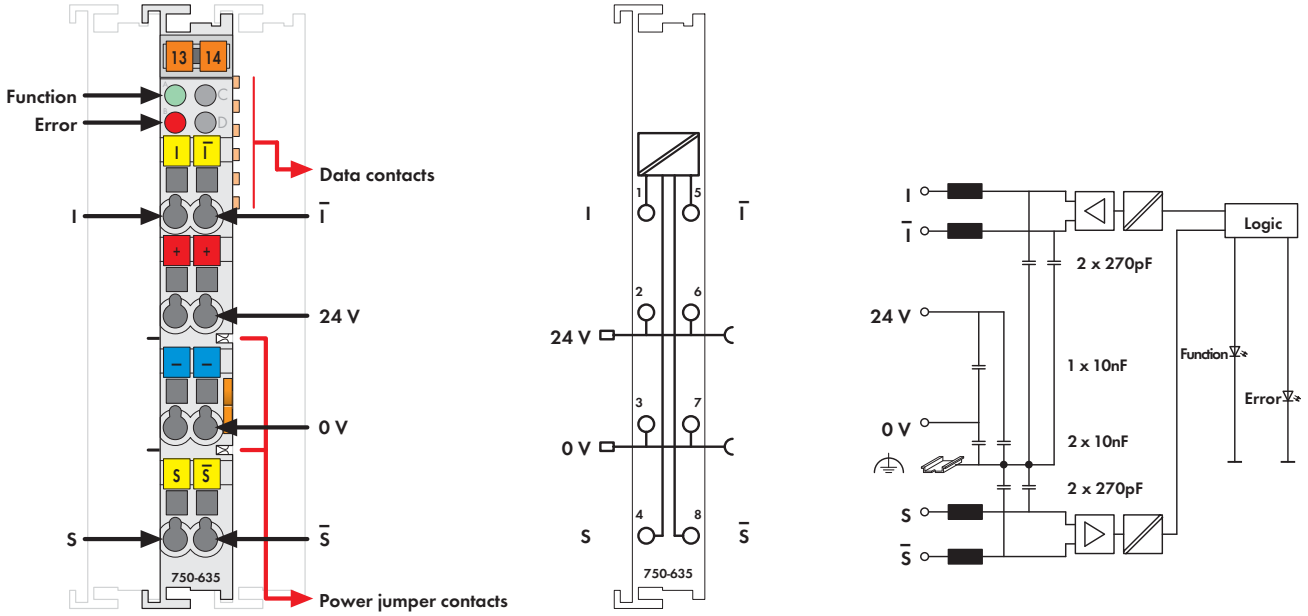

Fig. 750 Series
Delivered without miniature WSB markers

The digital impulse interface is designed for the connection of magnetostrictive distance measurement sensors with a start/stop interface. After receiving a read pulse, these sensors deliver a time-delayed reply impulse. The time delay is proportional to the sensor distance.

Each sensor may have up to four position transmitters (permanent magnets). Their position data can be accessed serially by the control. The position data is stored in the process image of the fieldbus coupler as a 24-bit value.

The parameterization of the ultrasonic speed and the transmission points is done via the control byte. The parameters can be changed during operation.

The transmission of the impulses is done with RS-422 differential drivers which guarantees trouble-free data transmission.

Distance sensors with the following features can be used: Start/Stop interface with RS-422 differential signals, sensor supply 24 V, manufacturer: e.g., Balluff

Description	Item No.	Pack. Unit
Digital Impulse Interface	**750-635**	1
Digital Impulse Interface (without connector)	**753-635**	1

Accessories		Item No.	Pack. Unit
	753 Series Connectors	**753-110**	25
	Coding elements	**753-150**	100
	Miniature WSB Quick marking system		
	plain	**248-501**	5
	with marking	see Section 11	

Approvals

Conformity marking	CE
Korea Certification	
UL 508	
ANSI/ISA 12.12.01	Class I, Div. 2, Grp. ABCD, T4
TÜV 12.1297 X (Brazil)	Ex nA IIC T4 Gc (750-635)
TÜV 07 ATEX 554086 X	I M2 Ex d I Mb, II 3 G Ex nA IIC T4 Gc, II 3 D Ex tc IIIC T135°C Dc
IECEx TUN 09.0001 X	Ex d I Mb, Ex nA IIC T4 Gc, Ex tc IIIC T135°C Dc

Technical Data

Sensor connection	Start/Stop; Init; Vv; ground connection of the shield via the housing of the sensor
Number of inputs	1
Current consumption (internal)	45 mA
Voltage via power jumper contacts	24 V DC (-15 % ... +20 %)
Data transmission	RS 422
Signal output	differential signal (RS-422)
Signal input	differential signal (RS-422)
Resolution	1 µm
Hysteresis	depends on the distance sensor
Update time	2 ms
Distance sensor length	≤ 4 m
Line length (max.)	500 m
Isolation	500 V system/supply
Internal bit width	1 x 24 bits data 1 x 8 bits control/status
Wire connection	CAGE CLAMP®
Cross sections	0.08 mm² ... 2.5 mm² / AWG 28 ... 14
Strip lengths, 750/753 Series	8 ... 9 mm / 0.33 in 9 ... 10 mm / 0.37 in
Width	12 mm
Weight	51 g
EMC immunity of interference	acc. to EN 61000-6-2
EMC emission of interference	acc. to EN 61000-6-4

RTC Module

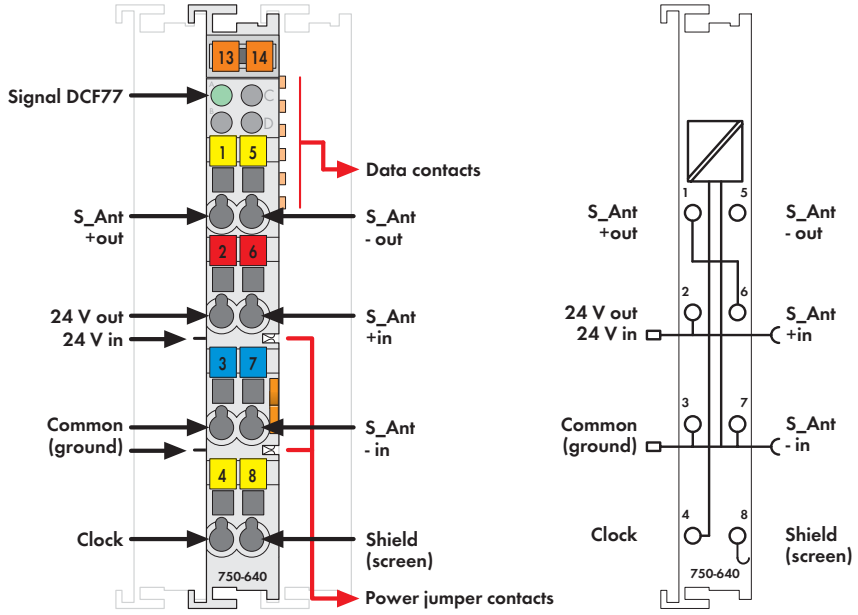

Delivered without miniature WSB markers

The 750-640 RTC Module provides the higher-level control system with the actual time.
The time is buffered and continues to run in the event of a power failure. When an external receiver is connected, the clock can be set using the time signal from DCF77, WWVB, or MSF.
By default the module is set to receive DCF77 signals.
The receiver can be supplied directly via the module.
Connecting an external receiver to operate the RTC module is not absolutely necessary.

With its 32 channels, the integrated time switch clock function makes it easier for the control unit to process time-triggered actions.
The module also counts the power-on time of the 32 channels.

Description	Item No.	Pack. Unit
RTC module	**750-640**	1

Accessories		Item No.	Pack. Unit
Miniature WSB Quick marking system			
	plain	**248-501**	5
	with marking	see Section 11	

Approvals

Conformity marking	CE
Korea Certification	
UL 508	
ANSI/ISA 12.12.01	Class I, Div. 2, Grp. ABCD, T4
TÜV 07 ATEX 554086 X	I M2 Ex d I Mb,
	II 3 G Ex nA IIC T4 Gc,
	II 3 D Ex tc IIIC T135°C Dc
IECEx TUN 09.0001 X	Ex d I Mb,
	Ex nA IIC T4 Gc,
	Ex tc IIIC T135°C Dc

Technical Data

Current consumption (internal)	< 20 mA
Voltage via power jumper contacts	24 V DC (-15 % ... +20 %)
Clock	
Accuracy (+25 °C)	< 1 min/month
Accuracy (+10 °C ... +40 °C)	< 2 min/month
Accuracy (-25 °C ... +85 °C)	< 7 min/month
Drift	< 2 min/year
Buffer length	> 6 days
Clock Timer	
Number of channels	32
Switching points	32 (per 32 channels on/off)
Signal voltage (0)	-24 V ... +1 V
Signal voltage (1)	3 V ... 24 V
Open-circuit voltage	4 VDC
Input filter	10 ms
Input current (typ.)	< 5 mA (at 24 V)
	< 1 mA (at 5 V)
Supply $S_{ant, in}$	5 V ... 24 V DC
Isolation	500 V system/supply
Current consumption typ. (field side)	11 mA + load
Internal bit width	1 x 40 bits data (in/out)
	(5 bytes user data)
	1 x 8 bits control/status (optional)
Wire connection	CAGE CLAMP®
Cross sections	0.08 mm² ... 2.5 mm² / AWG 28 ... 14
Strip lengths	8 ... 9 mm / 0.33 in
Width	12 mm
Weight	52 g
EMC immunity of interference	acc. to EN 61000-6-2
EMC emission of interference	acc. to EN 61000-6-3

Condition Monitoring

Growing cost pressure in global competition forces companies to use existing cost reduction potential and to boost efficiency to an increasing extent. Concerning service and maintenance, this implies provision of guaranteed trouble-free production processes, to avoid unplanned machine downtime and to use machine life to full capacity.

In order to achieve these goals, it is vital to implement online conditioning monitoring systems: errors can be diagnosed in time, maintenance measures can be scheduled optimally and unexpected machine breakdowns can be avoided.

Consistent machine health monitoring via fieldbus thus allows prognostic analysis and reaction before damage occurs.

WAGO offers I/O modules for use with the WAGO-I/O-SYSTEM that receive and process parameters such as current, temperature, standard signals or machine vibration.

Typical application areas are in standard machines like electric motors, ventilators, pumps, air conditioning systems, etc.

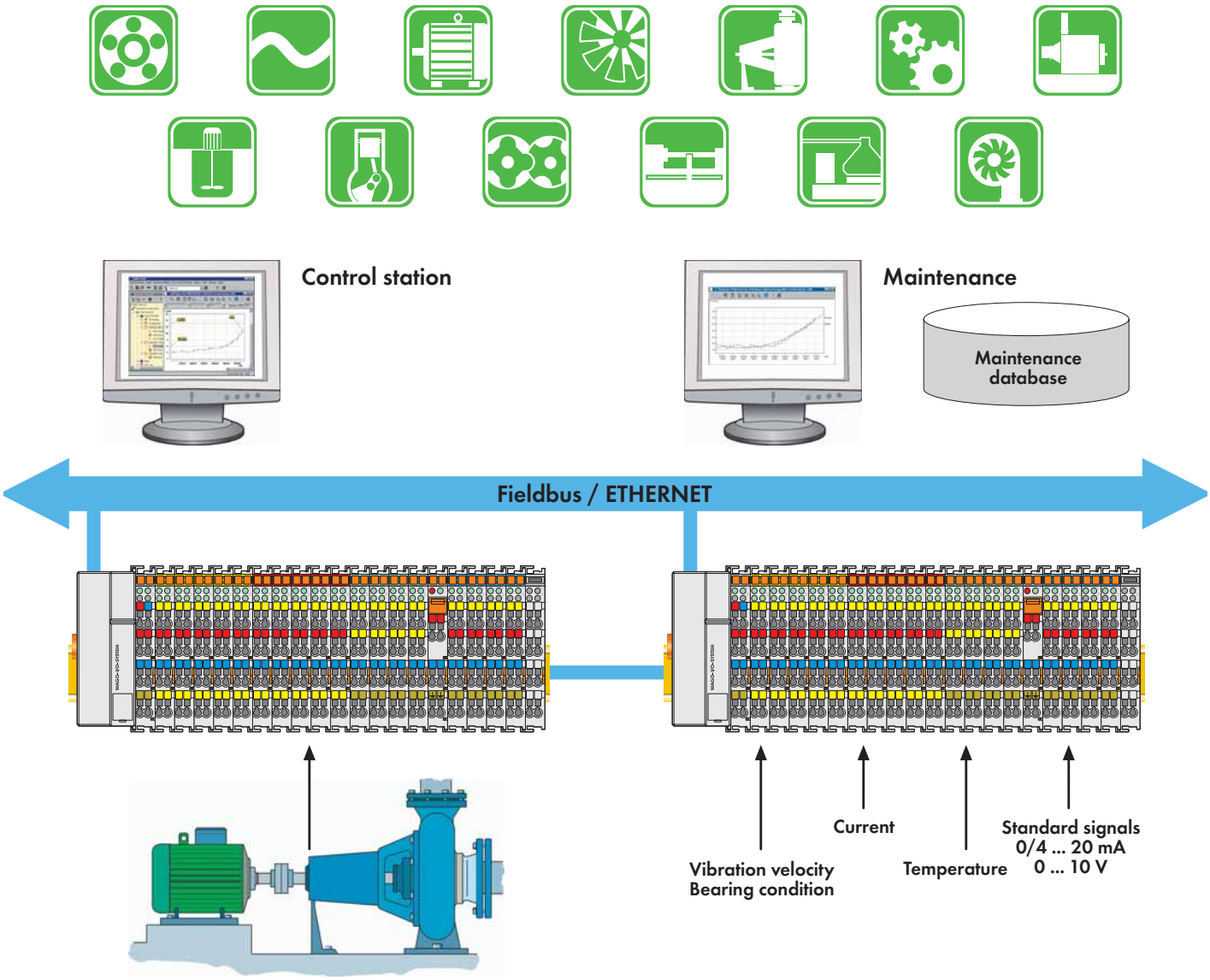

2-Channel Vibration Velocity/Bearing Condition Monitoring VIB I/O

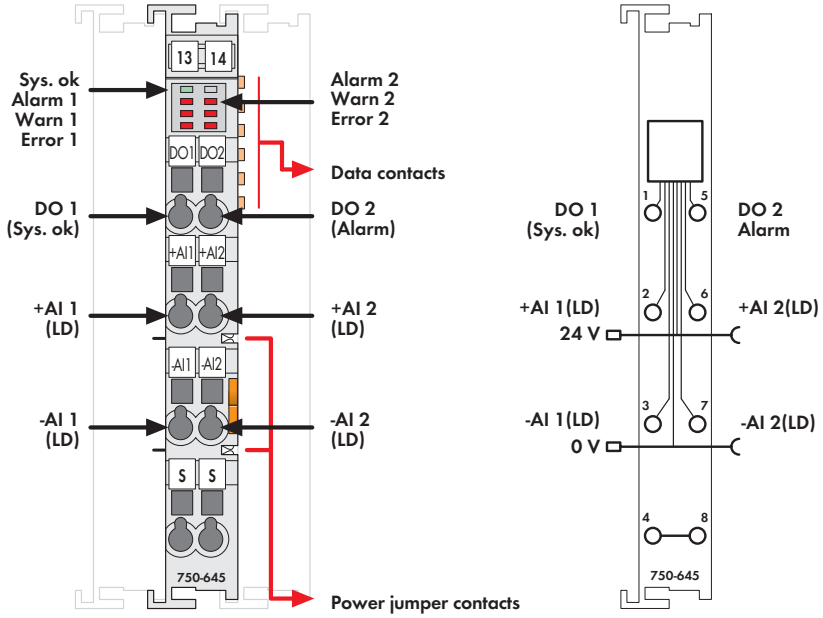

Delivered without miniature WSB markers

The VIB I/O modules are used for online monitoring of the machine vibration level. It records the two most important parameters required for the condition analysis; vibration severity and roller bearing condition.

The severity of vibration is a measurement of the machine vibration energy and therefore, a suitable indicator for the vibration forces acting on the machine. The ISO 10816-3 standard is used to assess the results in which the effective values of the (measured) vibration are divided into three quality categories.

The roller bearing condition is evaluated on the basis of high-frequency shock impulse signals. Shock impulses are momentary impulses arising from mechanical damage to roller bearings or the bearing surfaces.

Evaluation uses a scale where the measured shock impulses are divided into three bearing condition categories: 'good', 'limited' and 'poor'. By recording the measurement results and evaluation in a trend curve, bearing damage can be detected at an early stage.
A special Tandem-Piezo® acceleration sensor at the same time, provides the measurement of machine vibrations and high-frequency shock impulse signals.

Description	Item No.	Pack. Unit
2AI/2DO VIB VRMS/SPM Multi	**750-645**	1

Accessories		Item No.	Pack. Unit
Tandem-Piezo sensor		**750-925**	1
Miniature WSB Quick marking system			
	plain	**248-501**	5
	with marking	see Section 11	

Approvals

Conformity marking	CE
Korea Certification	
UL 508	
ANSI/ISA 12.12.01	Class I, Div. 2, Grp. ABCD, T4
TÜV 07 ATEX 554086 X	I M2 Ex d I Mb, II 3 G Ex nA IIC T4 Gc, II 3 D Ex tc IIIC T135°C Dc
IECEx TUN 09.0001 X	Ex d I Mb, Ex nA IIC T4 Gc, Ex tc IIIC T135°C Dc

Technical Data

Sensor inputs	+AI1, -AI1, +AI2, -AI2
Number of inputs	2
Input ranges	
Vibration velocity	0 - 100mm/s
Shock pulse	-10 ... +80 db_{SV}
No. of outputs	2 (Alarm and System ok)
Configuration	Alarm and warning threshold via process image and I/O Check
Outputs	24 V DC 0.5 A short-circuit protected
Current consumption typ. (KBUS)	30 mA
Voltage via power jumper contacts	24 V DC (-15 % ... +20 %)
Isolation	500 V system/supply
Wire connection	CAGE CLAMP®
Cross sections	0.08 mm² ... 2.5 mm² / AWG 28 ... 14
Strip lengths	8 ... 9 mm / 0.33 in
Width	12 mm
Weight	52 g
EMC immunity of interference	acc. to EN 61000-6-2
EMC emission of interference	acc. to EN 61000-6-3

Stepper Controller RS-422 / 24 V / 20 mA

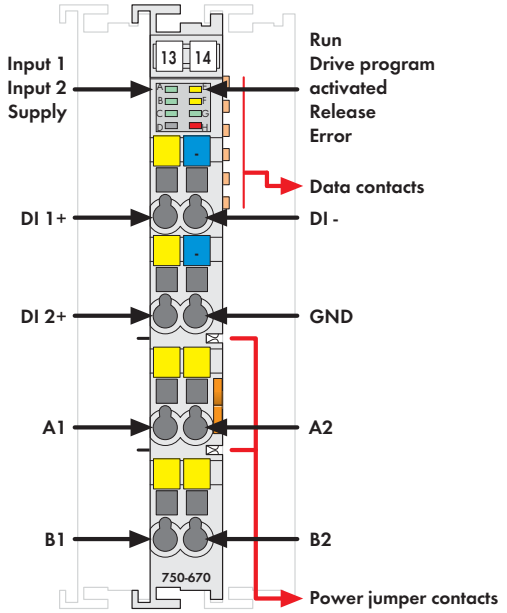

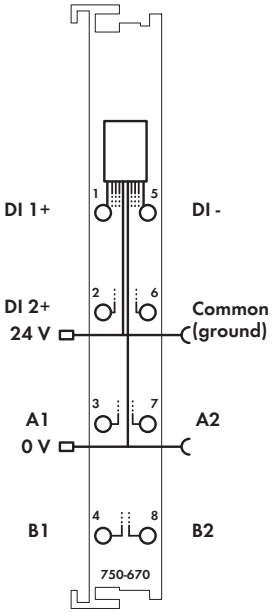

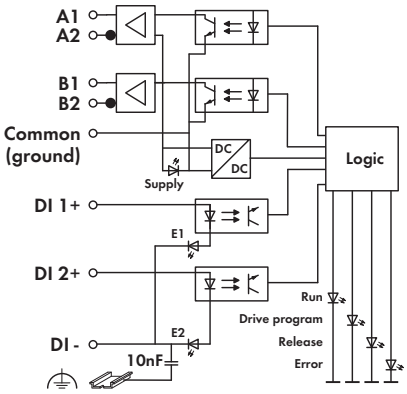

Delivered without miniature WSB markers

The 750-670 module is an intelligent stepper controller used to control different drive power sections with pulse/direction interface or incremental encoder input.
RS-422 and 24V or 20mA interfaces can be used.
Due to the high output frequency, stepper output stages with smooth microstepping resolution can be used.
In addition, this module can also be used as a high-precision frequency or pulse width modulator.
Two configurable inputs for Start/Stop, limit switches, reference cams, Jog/Tip, etc., are evaluated directly and without any further delay by the internal software.
Versatile functions, such as positioning with different acceleration slopes, command tables, camshaft controller, auto referencing and other event-dependent properties provide this controller with a wide spectrum of possible uses
The programmer's interface is the same for all WAGO stepper controller modules.
Additional operating modes:

- Pulse width modulation
- Frequency Generator
- Single-shot mode

Description	Item No.	Pack. Unit
Stepper controller RS-422 / 24 V / 20 mA	**750-670**	1

Accessories	Item No.	Pack. Unit
Miniature WSB Quick marking system		
plain	**248-501**	5
with marking	see Section 11	

Approvals

Conformity marking	CE
UL 508	
ANSI/ISA 12.12.01	Class I, Div. 2, Grp. ABCD, T4
TÜV 07 ATEX 554086 X	I M2 Ex d I Mb, II 3 G Ex nA IIC T4 Gc, II 3 D Ex tc IIIC T135°C Dc
IECEx TUN 09.0001 X	Ex d I Mb, Ex nA IIC T4 Gc, Ex tc IIIC T135°C Dc

Technical Data

Outputs	
No. of outputs	1 channel (2 differential outputs A1, A2, B1, B2)
Signal voltage	5 V DC internal, 5 V ... 24 V DC external
Type of load	RS 422, TTL, optocoupler
Output current (max.)	30 mA short-circuit protected
Output frequency	200 µHz ... 500 kHz
Pulse duty factor	50 % (in stepper motor mode)
Inputs	
Number of inputs	2 (DI 1, DI 2)
Signal voltage (0)	-3 V ... +5 V DC
Signal voltage (1)	15 V ... 30 V DC
Input filter	100 µs, software filter can be installed
Input current (typ.)	2.8 mA
Module	
Operation modes	Individual positioning, reference run, jog, tip, instruction tables, PWM
Functions	Positioning (absolute/relative), flying setpoint change, rotary axis, etc.
Resolution	
Distance	23 bits + sign bit
Speed	15 bits + 16 bit prescaler
Acceleration	15 bits + 16 bit prescaler
Voltage via power jumper contacts	24 V DC (-25 % ... +30 %)
Current consumption typ. (KBUS)	98 mA
Isolation	500 V system/supply
Internal bit width	12 byte inputs/outputs
Wire connection	CAGE CLAMP®
Cross sections	0.08 mm² ... 2.5 mm² / AWG 28 ... 14
Strip lengths	8 ... 9 mm / 0.33 in
Width	12 mm
Weight	49.6 g
EMC immunity of interference	acc. to EN 61000-6-2
EMC emission of interference	acc. to EN 61000-6-3

Stepper Controller 24 V / 1.5 A

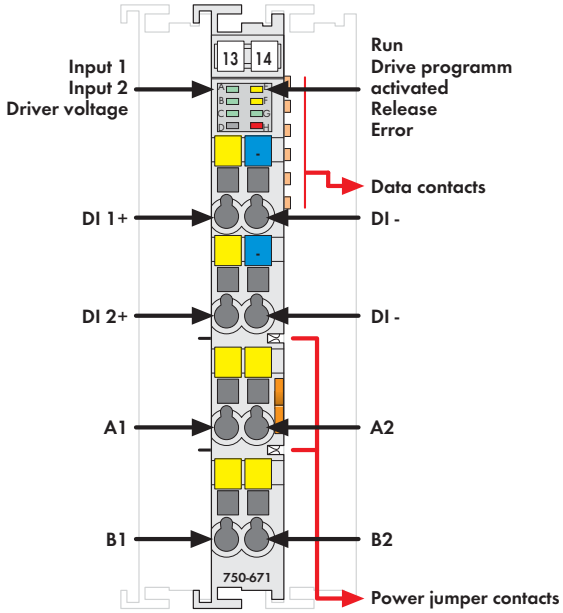

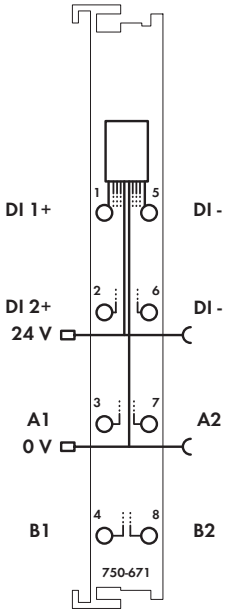

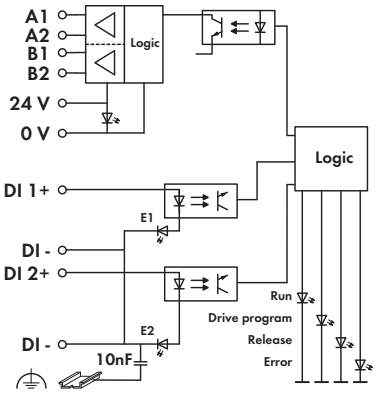

Delivered without miniature WSB markers

The 750-671 module is an intelligent stepper controller with on-board power driver designed to control 2-phase stepper motors up to 24V/1.5A.
The 64 times microstepping prevents step losses due to resonance in the acceleration phases and prevents excessive wear on mechanical parts.
Adjustable current limits for stop, acceleration and constant speed help minimize motor power dissipation.
Two configurable inputs for Start/Stop, limit switches, reference cams, Jog/Tip, etc., are evaluated directly and without any further delay by the internal software.

Versatile functions, such as positioning with different acceleration slopes, command tables, camshaft controller, auto referencing and other event-dependent properties provide this controller with a wide spectrum of possible uses
The programmer's interface is the same for all WAGO stepper controller modules.

Description	Item No.	Pack. Unit
Stepper controller 24 V/1.5 A	**750-671**	1

Accessories		Item No.	Pack. Unit
Miniature WSB Quick marking system			
	plain	**248-501**	5
	with marking	see Section 11	

Approvals

Conformity marking	CE
Ex TÜV 07 ATEX 554086 X	I M2 Ex d I Mb,
	II 3 G Ex nA IIC T4 Gc,
	II 3 D Ex tc IIIC T135°C Dc
IECEx TUN 09.0001 X	Ex d I Mb,
	Ex nA IIC T4 Gc,
	Ex tc IIIC T135°C Dc

Technical Data

Outputs	
No. of outputs	1 stepper motor (2 phases/bipolar)
Max. stepper frequency	7812 Hz at 64 microstepping internal
Output current (max.)	up to 2 x 1.5 A peak value; 1 A eff.
Inputs	
Number of inputs	2 (DI 1, DI 2)
Signal voltage (0)	-3 V ... +5 V DC
Signal voltage (1)	15 V ... 30 V DC
Input filter	100 µs, software filter can be installed
Input current (typ.)	2.8 mA
Module	
Operation modes	Individual positioning, reference run, jog, tip, instruction tables
Functions	Positioning (absolute/relative), flying setpoint change, rotary axis, etc.
Resolution	
Distance	23 bits + sign bit
Speed	15 bits + 16 bit prescaler
Acceleration	15 bits + 16 bit prescaler
Microstepping	64 steps
Voltage via power jumper contacts	24 V DC (-25 % ... +30 %)
Power supply	via system voltage DC/DC
Current consumption typ. (KBUS)	85 mA
Isolation	500 V system/supply
Internal bit width	12 byte inputs/outputs
Wire connection	CAGE CLAMP®
Cross sections	0.08 mm² ... 2.5 mm² / AWG 28 ... 14
Strip lengths	8 ... 9 mm / 0.33 in
Width	12 mm
Weight	51.8 g
EMC immunity of interference	acc. to EN 61000-6-2
EMC emission of interference	acc. to EN 61000-6-3

Stepper Controller 70 V / 7.5 A 6IN, 2OUT

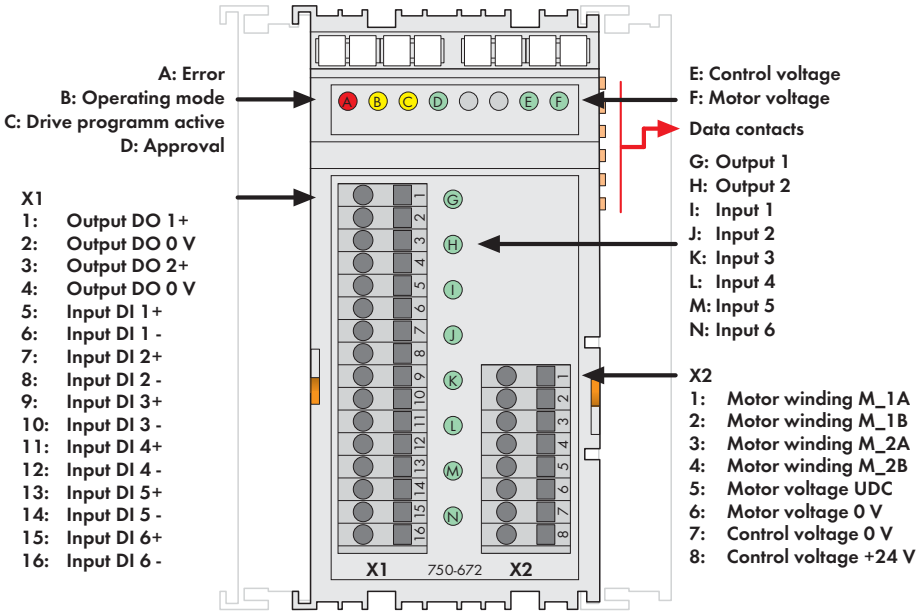

Delivered without miniature WSB markers

The 750-672 is an intelligent stepper controller with on-board power driver and incremental encoder evaluation to control 2-phase stepper motors up to 70V/7.5A. The 64 times microstepping prevents step losses due to resonance in the acceleration phases and reduces wear on the mechanical parts. Adjustable current limits for stop, acceleration and constant speed help minimize motor power dissipation. Six configurable inputs for Start/Stop, limit switches, reference cams, Jog/Tip, etc., are evaluated directly and without any further delay by the internal software. Two outputs can be linked with internal functions or used freely.

Versatile functions, such as positioning with different acceleration slopes, command tables, camshaft controller, auto referencing and other event-dependent properties provide this controller with a wide spectrum of possible uses. The programmer's interface is the same for all WAGO stepper controller modules.

Description	Item No.	Pack. Unit
Stepper Controller 70 V / 7.5 A 6IN, 2OUT	**750-672**	1

Accessories		Item No.	Pack. Unit
Miniature WSB Quick marking system			
	plain	**248-501**	5
	with marking	see Section 11	

Approvals

Conformity marking	CE
Korea Certification	

Technical Data

Power supply	**Control voltage**:
	24 V DC (-25 % ... +30 %),
	Closed current 120 mA + 2 x 0.5 A
	(DO1, DO2, load-dependent);
	Motor voltage:
	Nominal value 55 V DC,
	Absolute upper limit: 71.5 V,
	Absolute lower limit: 18 V,
	Closed current typ. = 5 mA,
	Protection via external fuse 5 A
Protection	**Short circuit monitoring of motor**
	connections:
	Winding short circuit and short circuit to
	0 V and 24 V;
	24 V supply:
	Reverse voltage protection;
	Motor supply:
	Reverse voltage protection via external fuse
Isolation	500 V system/supply
Voltage supply (internal)	via internal data bus and control voltage
Current consumption typ. (internal)	70 mA
Internal bit width	12-byte inputs/outputs
Configuration	via PLC and WAGO-I/O-CHECK
	(configuration tool)

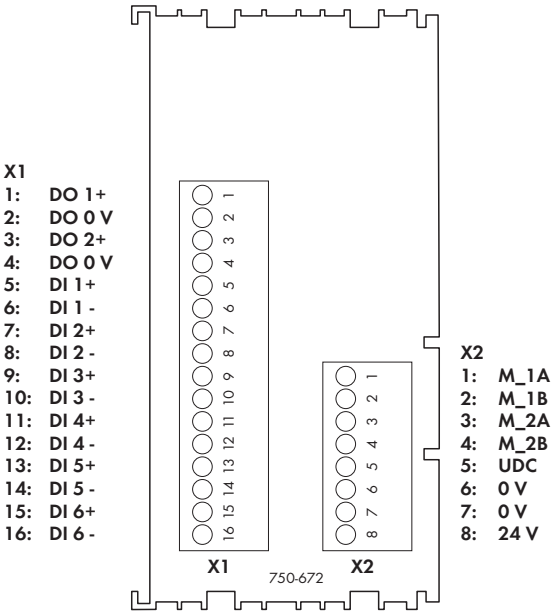

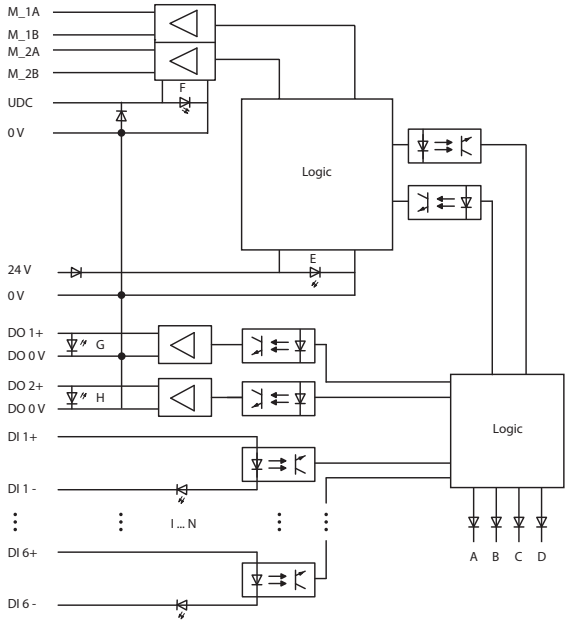

Technical Data

Inputs	
Signal voltage (0)	-3 V ... +5 V DC
Signal voltage (1)	15 V ... 30 V DC
	Electrical isolation from each other and
	from all other voltage potentials on the
	module
Input filter	100 µs, software filter can be installed
Input current (typ.)	2.8 mA
Outputs	
No. of outputs	2 (DO1, DO2)
Output current	0.5 A, short-circuit protected
Max. switching frequency	5 Hz, inductive load to IEC947-5-1,
	DC13
Type of load	Resistive load,
	inductive load (max. 2H),
	lamps
Function	Inputs (preset):
	DI 1: Drive stop,
	DI 2: Reference input,
	DI 3: Jog switch in positive direction,
	DI 4: Jog switch in negative direction,
	DI 5: Limit switch in positive direction,
	DI 6: Limit switch in negative direction,
	Outputs (preset):
	DO 1: Target reached,
	DO 2: Error,
	Inputs and outputs can be freely
	reconfigured.
Motor connection	
No. of outputs	1 stepper motor (2 phases)
Output current (max.)	2 x 7.5 A temporary; derating starting at
	50 °C; 2 x 5.0 A nominal current; derating
	starting at 50 °C
Max. stepper frequency	7812 Hz full step
Diagnostics	Short circuit or ground fault overcurrent,
	overtemperature, supply voltage
	monitoring, motor wire break
Resolution	64 microsteps per full step
Cable length	30 m
	shielded cable

General Specifications

Operating temperature	0°C ... +55°C
Wire connection	CAGE CLAMP®
Cross sections	0.08 mm² ... 1.5 mm² / AWG 28 ... 14
	AWG 12 /14: THHN, THWN
Strip lengths	5 ... 6 mm / 0.22 in
Dimensions (mm) W x H x L	51 x 70 x 100
	Height from upper-edge of DIN 35 rail
Weight	56 g
Storage temperature	-25 °C ... +85 °C
Relative air humidity (no condensation)	95 %
Vibration resistance	acc. to IEC 60068-2-6
Shock resistance	acc. to IEC 60068-2-27/29
Degree of protection	IP20
EMC immunity of interference	acc. to EN 61000-6-2
EMC emission of interference	acc. to EN 61000-6-3

Servo Stepper Controller 70 V / 7.5 A 6IN, 2OUT

X1
1: Output DO 1+
2: Output DO 0 V
3: Output DO 2+
4: Output DO 0 V
5: Input DI 1+
6: Input DI 1 -
7: Input DI 2+
8: Input DI 2 -
9: Input DI 3+
10: Input DI 3 -
11: Input DI 4+
12: Input DI 4 -
13: Input DI 5+
14: Input DI 5 -
15: Input DI 6+
16: Input DI 6 -

X2
1: Transmitter A
2: Transmitter /A
3: Transmitter B
4: Transmitter /B
5: Transmitter Z
6: Transmitter /Z
7: Operating voltage of sensor 5 V
8: Operating voltage of sensor 0 V
9: Motor winding M_1A
10: Motor winding M_1B
11: Motor winding M_2A
12: Motor winding M_2B
13: Motor voltage UDC
14: Motor voltage 0 V
15: Control voltage 0 V
16: Control voltage +24 V

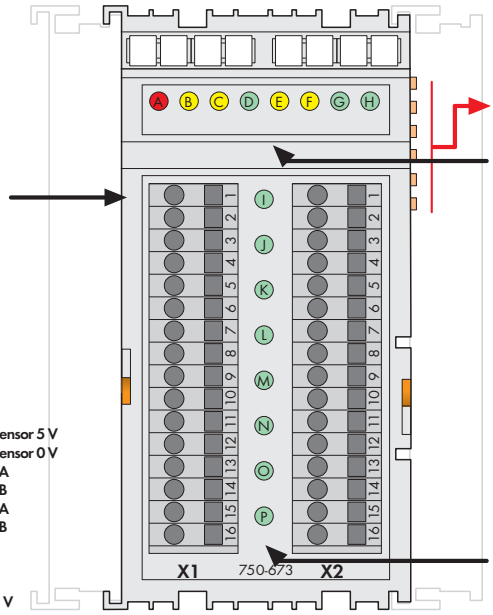

Data contacts

A: Error
B: Operating mode
C: Drive programm active
D: Approval
E: Info 1 Transmitter
F: Info 2 Transmitter
G: Control voltage
H: Motor voltage

I: Output 1
J: Output 2
K: Input 1
L: Input 2
M: Input 3
N: Input 4
O: Input 5
P: Input 6

Delivered without miniature WSB markers

The 750-673 is an intelligent servo stepper controller with on-board power driver and incremental encoder evaluation to control 2-phase stepper motors up to 70V/7.5A. The 64 times microstepping prevents step losses due to resonance in the acceleration phases and reduces wear on the mechanical parts. The controller features vector control that, together with the incremental encoder, contributes to an efficient and dynamic rotation speed characteristic. Six configurable inputs for start/stop, end-stop, reference, jog/tip, etc., can be directly processed by the internal software without delay. Two outputs can be linked with internal functions or used freely.

Versatile functions, such as positioning with different acceleration slopes, command tables, camshaft controller, auto referencing and other event-dependent properties provide this controller with a wide spectrum of possible uses. The programmer's interface is the same for all WAGO stepper controller modules.

Description	Item No.	Pack. Unit
Servo Stepper Controller 70 V / 7.5 A 6IN, 2OUT	**750-673**	1

Accessories		Item No.	Pack. Unit
Miniature WSB Quick marking system			
	plain	**248-501**	5
	with marking	see Section 11	

Approvals

Conformity marking	CE
Korea Certification	

Technical Data

Power supply	**Control voltage**:
	24 V DC (-25 % ... +30 %),
	Closed current 120 mA + 2 x 0.5 A
	(DO1, DO2, load-dependent) + approx.
	100 mA (encoder);
	Motor voltage:
	Nominal value 55 V DC,
	Absolute upper limit: 71.5 V,
	Absolute lower limit: 18 V,
	Closed current typ. = 5 mA,
	Protection via external fuse 5 A
Protection	**Short circuit monitoring of motor**
	connections:
	Winding short circuit and short circuit to
	0 V and 24 V;
	24 V supply:
	Reverse voltage protection;
	Motor supply:
	Reverse voltage protection via external fuse
Isolation	500 V system/supply
Voltage supply (internal)	via internal data bus and control voltage
Current consumption typ. (internal)	70 mA
Internal bit width	12-byte inputs/outputs
Configuration	via PLC and WAGO-I/O-CHECK
	(configuration tool)

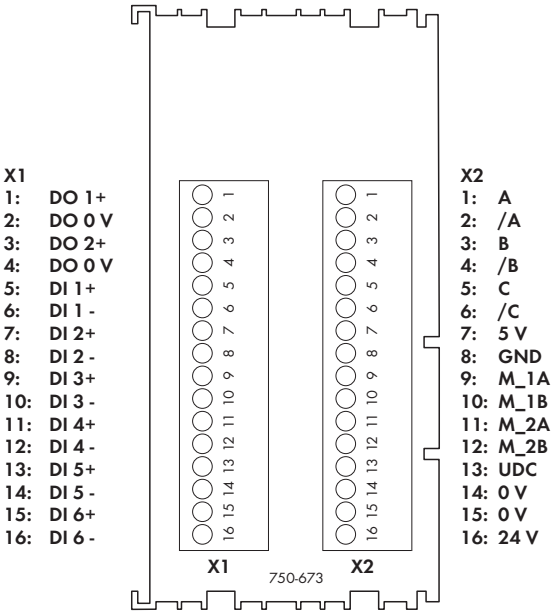

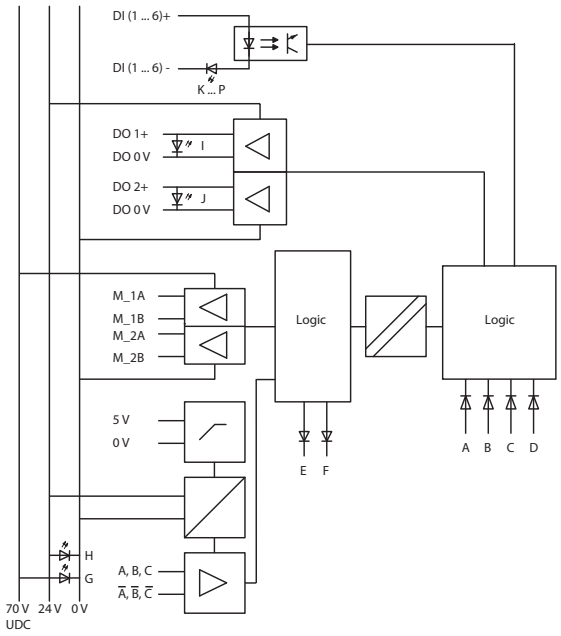

Technical Data

Inputs	
Signal voltage (0)	-3 V ... +5 V DC
Signal voltage (1)	15 V ... 30 V DC
	Electrical isolation from each other and
	from all other voltage potentials on the
	module
Input filter	100 µs, software filter can be installed
Input current (typ.)	2.8 mA
Outputs	
No. of outputs	2 (DO1, DO2)
Output current	0.5 A, short-circuit protected
Max. switching frequency	5 Hz, inductive load to IEC947-5-1,
	DC13
Type of load	Resistive load,
	inductive load (max. 2H),
	lamps
Function	Inputs (preset):
	DI 1: Drive stop,
	DI 2: Reference input,
	DI 3: Jog switch in positive direction,
	DI 4: Jog switch in negative direction,
	DI 5: Limit switch in positive direction,
	DI 6: Limit switch in negative direction,
	Outputs (preset):
	DO 1: Target reached,
	DO 2: Error,
	Inputs and outputs can be freely
	reconfigured.
Motor connection	
No. of outputs	1 stepper motor (2 phases)
Output current (max.)	2 x 7.5 A temporary; derating starting at
	50 °C; 2 x 5.0 A nominal current; derating
	starting at 50 °C
Max. stepper frequency	7812 Hz full step
Diagnostics	Short circuit or ground fault overcurrent,
	overtemperature, supply voltage
	monitoring, motor wire break, wrong
	rotational direction incremental encoder -
Resolution	64 microsteps per full step
Cable length	30 m
	shielded cable

Technical Data

Incremental encoder	
Sensor connection	A, /A, B, /B, C, /C
Signal voltage	Compatible with RS-485/RS-422, common
	GND with motor voltage and control
	voltage
Sensor frequency	1 MHz
Terminating resistor	internal 120 Ω
Sensor supply	5 V DC, 300 mA short-circuit protected
Quadrature decoder	4-fold report
Counter	32 bits binary

General Specifications

Operating temperature	0 °C ... +55 °C
Wire connection	CAGE CLAMP®
Cross sections	0.08 mm² ... 1.5 mm² / AWG 28 ... 14
	AWG 12 /14: THHN, THWN
Strip lengths	5 ... 6 mm / 0.22 in
Dimensions (mm) W x H x L	51 x 70 x 100
	Height from upper-edge of DIN 35 rail
Weight	56 g
Storage temperature	-25 °C ... +85 °C
Relative air humidity (no condensation)	95 %
Vibration resistance	acc. to IEC 60068-2-6
Shock resistance	acc. to IEC 60068-2-27/29
Degree of protection	IP20
EMC immunity of interference	acc. to EN 61000-6-2
EMC emission of interference	acc. to EN 61000-6-3

DC-Drive Controller 750-636 24V/5A

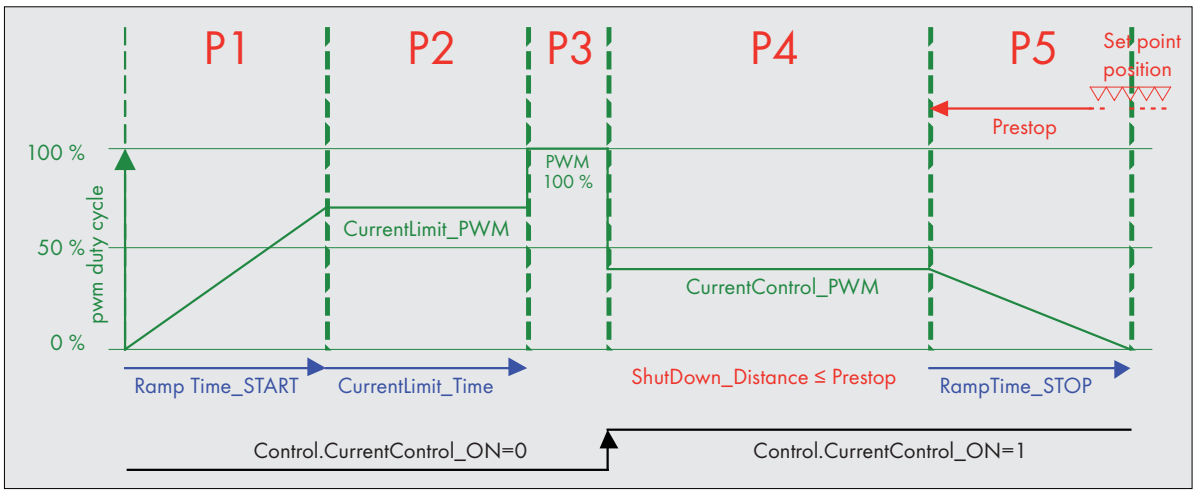

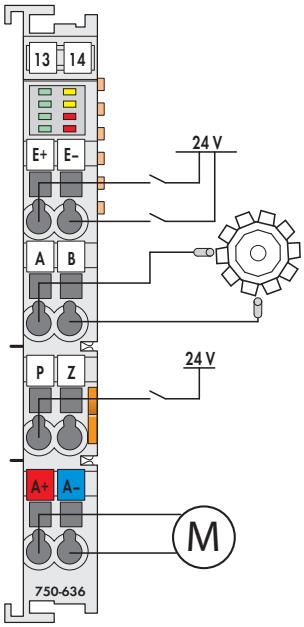

Features:

- Control of collector-based 24V/5A motors using 12mm/0.47in wide modules
- 5V/24V incremental encoder input
- Inputs for limit switch and preset (setting of reference point)
- Forward/backward run
- Inrush current up to 15A/500ms, temporary >30A
- Adaptive switch-off optimization (pre-stop distance)
- Adjustable soft start and stop
- Quick stop via coil short-circuit
- Current reduction (slow run) via PWM control
- Gear backlash compensation
- 32-bit position values
- Output stage monitoring via current and temperature monitoring (with pre-warning)
- PWM control and incremental encoder may be used independently
    - Power control for 24V loads
    - Incremental encoder module

Application area:

- ▸ Control and set-up functions for:
    - ▷ Width adjustments
    - ▷ Roller pressure
    - ▷ Pusher default setting
- ▸ Metering
- ▸ Vans

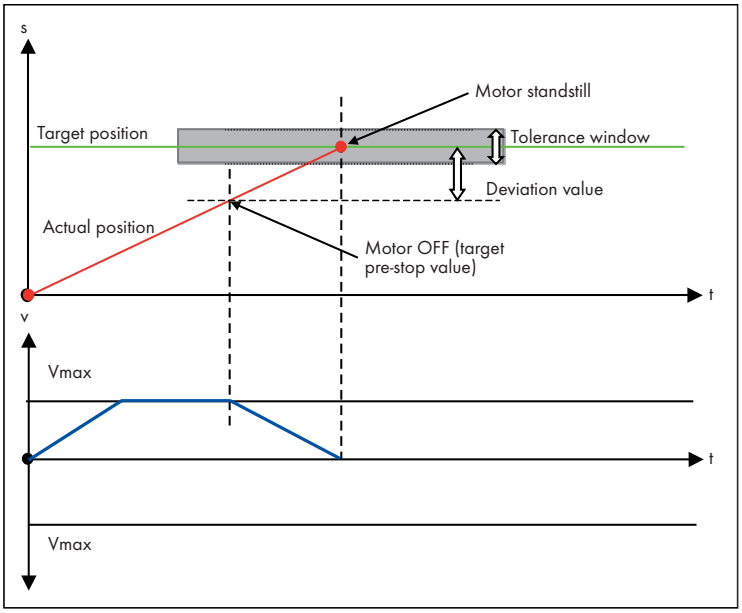

DC Drive Controller 24 V / 5 A

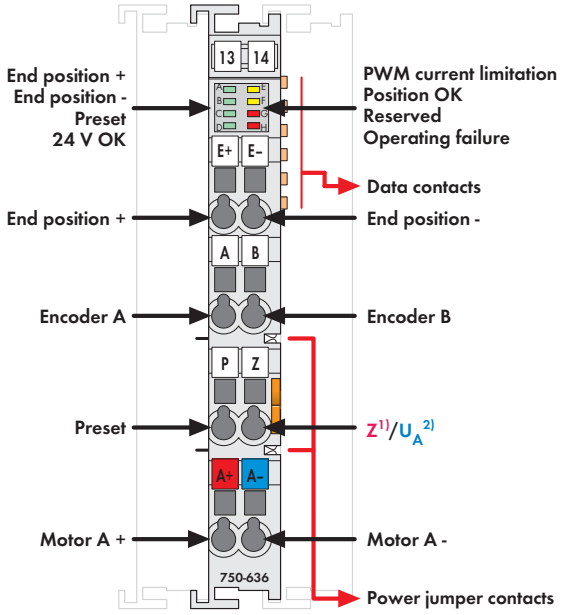

Delivered without miniature WSB markers

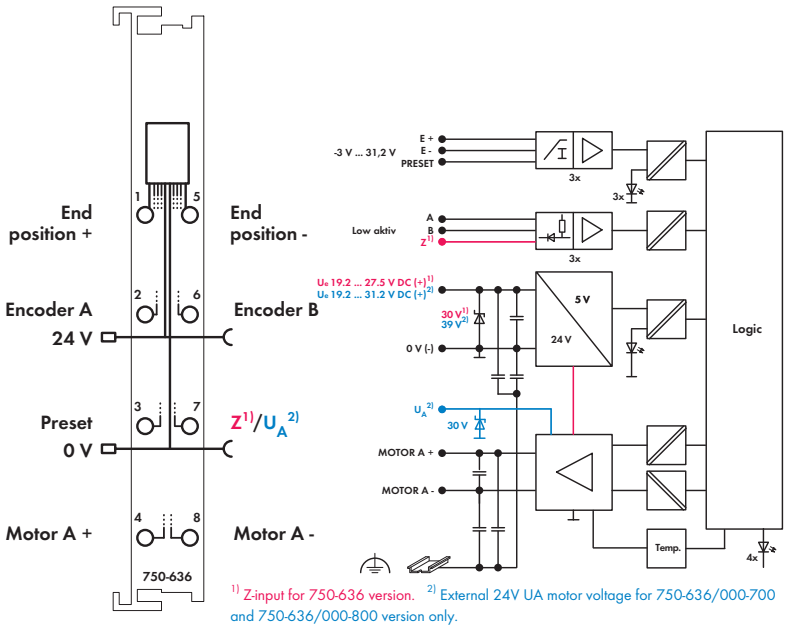

1) Z-input for 750-636 version. 2) External 24V UA motor voltage for 750-636/000-700 and 750-636/000-800 version only.

This module is a 1-channel intelligent positioning controller for 24V DC motors up to 5A with incremental position feeback. Three 24V inputs record the limit switches and a preset signal. An incremental encoder interface evaluates the signals from the position transmitter and determines actual value.
If required, the positioning optimizes the pre-stop position depending on direction and takes backlash compensation into account.
Bi-directional control of the DC motor is done via short-circuit proof and temperature-monitored H-bridge. Both switched operation and soft-start/stop or current reduction are possible through PWM control.

The field-side 24V supply voltage (20-28VDC) from the power contacts, which is monitored for undervoltage/overvoltage events, is looped through to adjacent modules.

Description	Item No.	Pack. Unit
DC Drive Controller 24V/5A	**750-636**	1
DC Drive Controller 24V/5A/T	**750-636/025-000**	1
Extended temperature range: -20 °C ... +60 °C		
DC Drive Controller 24 V / 5 A / V_A*	**750-636/000-700**	1
* V_A external motor voltage		
DC-Drive Controller 24V/5A/R*	**750-636/000-800**	1
* /R: Interference-free for safety function applications (see manual)		

Accessories	Item No.	Pack. Unit
Miniature WSB Quick marking system		
plain	**248-501**	5
with marking	see Section 11	

Approvals

Conformity marking	CE
Korea Certification	(750-636)

Technical Data

Wire connection	CAGE CLAMP®
Cross sections	0.08 mm² ... 2.5 mm² / AWG 28 ... 14
Strip lengths	8 ... 9 mm / 0.33 in
Width	12 mm
Weight	55.5 g
EMC immunity of interference	acc. to EN 61000-6-2
EMC emission of interference	acc. to EN 61000-6-3

Technical Data

Outputs	
No. of outputs	1 channel
Motor current	5 A rated current at 33% ED,
	15 A / 500 ms
Motor connection	A+, A-, H-bridge output;
	short-circuit protected
PWM frequency (typ.)	20 kHz
Inputs:	
Digital inputs (E+, E-, Preset)	Type1 acc. to IEC61131;
	high-side switching
Input current (typ.)	2.7 mA at 24 V
Encoder connection	A, B, Zero low-side switching;
	5 V ... 24 V DC / open collector
Signal voltage (0)	-3 V ... +1.5 V DC
Signal voltage (1)	2.4 V ... 30 V DC
Input current (typ.)	-3.2 mA at +0.3 V; 0 mA at >+5 V
Max. operating frequency	50 kHz
Quadrature decoder	1-fold, 2-fold, 4-fold report
Module	
Current consumption typ. (KBUS)	55 mA
Current consumption typ. (field side)	
750-636:	12 mA + load
750-636/000-700:	10 mA (fieldside) and 2 mA + load (motor)
750-636/000-800:	10 mA (fieldside) and 2 mA + load (motor)
Supply voltage	
750-636:	19.2 V ... 27.5 V DC
750-636/000-700:	19.2 ... 27.5 VDC (V_A);
	19.2 ... 31.2 VDC (field side)
750-636/000-800:	19.2 V ... 27.5 V DC (V_A)
	19.2 V ... 31.2 V DC (fieldside)
Isolation	500 V system/supply
Data width process image	32 bits set/actual value;
	16 bits control or status

Proportional Valve Module

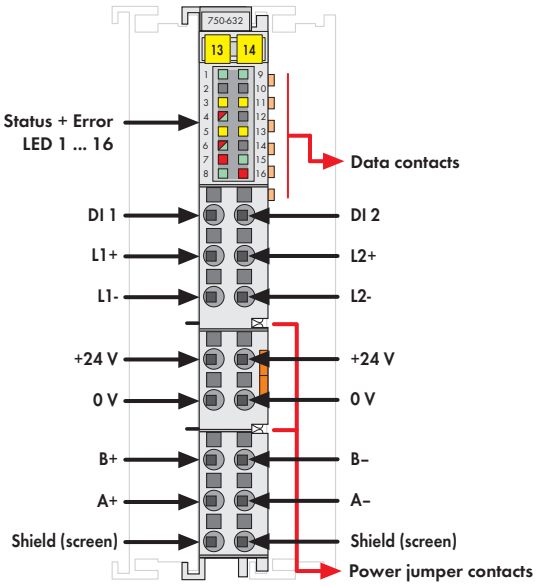

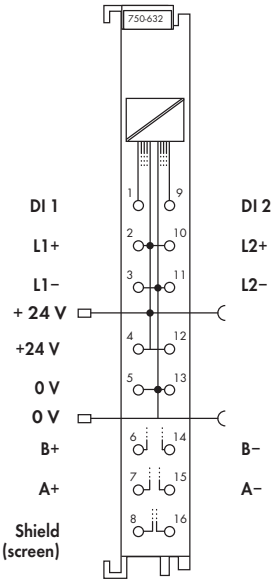

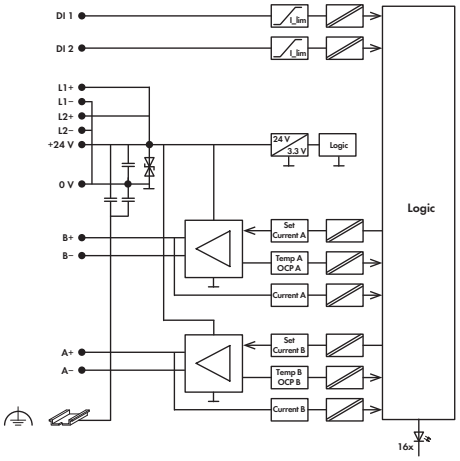

The 750-632 Proportional Valve Module controls two single-coil valves with up to 24V/1.6A, or one valve with up to 24V/2A. The module features two current-controlled PWM* outputs with adjustable dither.
Both unipolar and bipolar valve control are possible. Operating a valve with two unipolar coils is also possible via a single-channel module. Characteristic curve adaptations, such as zero offset, dual gain compensation or range limitations, can be adjusted via parameters.

Scaling and configurable up/down ramps permit set point adjustment to the application. For example, monitoring threshold value switches is performed via two additional digital inputs. Start-up and valve parameters adjustment are performed via WAGO-I/O-CHECK software or the controller.

*PWM = Pulse width modulation

Description	Item No.	Pack. Unit
Proportional Valve Module	**750-632**	1

Accessories	Item No.	Pack. Unit
WAGO-I/O-CHECK, RS-232 kit	**759-302**	1
Miniature WSB Quick marking system		
plain	**248-501**	5
with marking	see Section 11	

Approvals

Conformity marking	CE
Marine applications	GL
UL 508	
ANSI/ISA 12.12.01	Class I, Div. 2, Grp. ABCD, T4
TÜV 14 ATEX 148929 X	II 3 G Ex nA IIC T4 Gc
IECEx TUN 14.0035 X	Ex nA IIC T4 Gc

Technical Data

Wire connection	Push-in CAGE CLAMP®
Cross sections	solid:
	0.08 mm² ... 1.5 mm² / AWG 28 ... 14
	fine-stranded:
	0.25 mm² ... 1.5 mm² / AWG 22 ... 14
	Coil terminals A+/A-/B+/B-:
	1.5 mm²/AWG 16
	For applications acc. to UL 508:
	AWG 16 for all terminals
Strip lengths	8 ... 9 mm / 0.33 in
Width	12 mm
Weight	53.7 g
EMC immunity of interference	acc. to EN 61000-6-2, marine applications
EMC emission of interference	acc. to EN 61000-6-4, marine applications

Technical Data

Outputs	
No. of outputs	2 bipolar outputs (A+, A- and B+, B-)
Output current (max.)	1-channel operation: 2 A (Derating must be observed); 2-channel operation: 1.6 A per channel (Derating must be observed)
Output type	H-bridge output with current-regulated PWM output (short-circuit proof and thermal overload-proof for each channel)
Dither frequency	250 Hz; 125 Hz; 62,5 Hz; ... 1 Hz (parameterizable)
PWM frequency (typ.)	50 kHz
Nominal output voltage	24 V DC (-25 % ... +30 %)
Type of load	Operating range: inductive (1 mH ... 600 mH); Internal load resistance (> 8 Ohm)
Line length (max.)	30 m
Inputs	
Number of inputs	2 (DI 1, DI 2), Type 1 acc. to IEC 61131; high-side switching
Input current	2.7 mA at 24 V
Module	
Max. current consumption (internal)	125 mA
Current consumption max. (field side)	20 mA + load
Supply voltage	24 V DC (-25 % ... +30 %)
Isolation	500 V system/supply
Data width process image	6 bytes: single-channel operating mode; 12 bytes: dual-channel operating mode

Communication Modules

Housing Design 750/753 Series	
Dimensions (mm) W x H x L	12 x 65 x 100 (Height from upper edge of the DIN-rail)
Wire connection	CAGE CLAMP®
Cross sections	0.08 mm² ... 2.5 mm² / 28 ... 14 AWG
Strip lengths	750 Series: 8 ... 9 mm / 0.33 in. 753 Series: 9 ... 10 mm / 0.37 in.

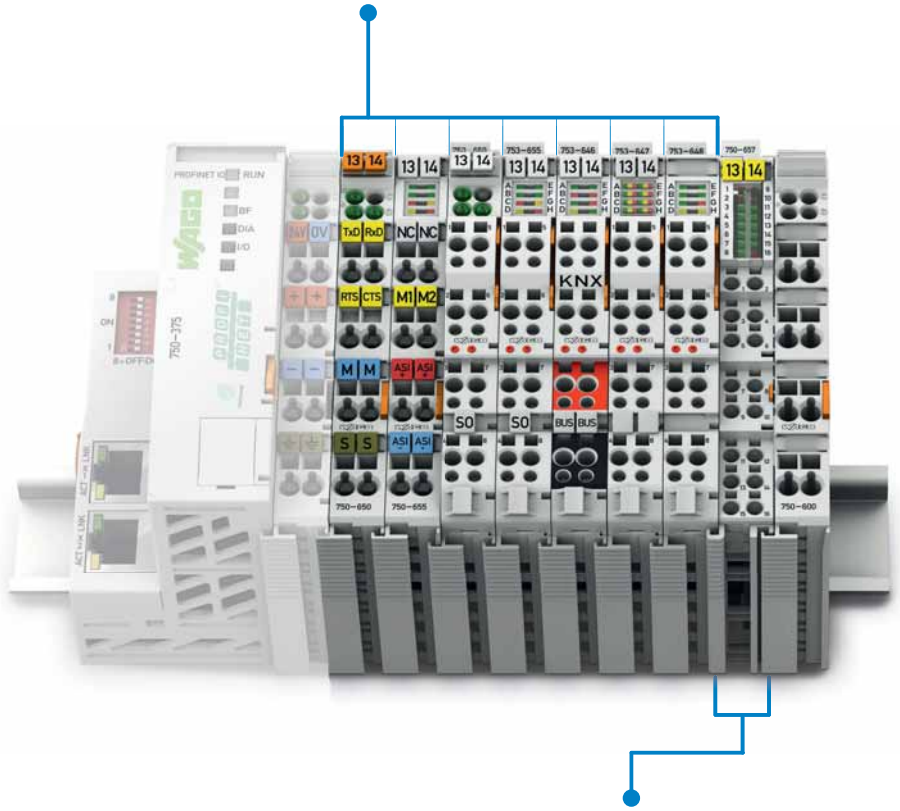

Housing Design 750 Series with Push-in CAGE CLAMP® Connection (16 Connection Terminals)	
Wire connection	Push-in CAGE CLAMP®
Cross sections	solid: 0.08 mm² ... 2.5 mm² / 28 ... 16 AWG fine-stranded: 0.25 mm² ... 1.5 mm² / 22 ... 16 AWG
Strip lengths	8 ... 9 mm / 0.33 in.

I/O-Systems; Communication Modules
Contents

Function	Description	Item No.			Page
		Standard	/T Extended operating temperature range: -20 °C ... +60 °C	Pluggable	
Serial Interface	Serial Interface RS-232 C, 9600, N, 8, 1	750-650		753-650	314
	Serial Interface RS-232 C, 9600, N, 8, 1, 5 bytes	750-650/000-001			314
	Serial Interface RS-232 C, 9600, E, 7, 2	750-650/000-002			314
	Serial Interface RS-232 C, 4800, E, 7, 1	750-650/000-004			314
	Serial Interface RS-232 C, 9600, E, 8, 1	750-650/000-006			314
	Serial Interface RS-232 C, 2400, E, 8, 1	750-650/000-009			314
	Serial Interface RS-232 C, 19200, N, 8, 1	750-650/000-010			314
	Serial Interface RS-232 C, 19200, E, 8, 1	750-650/000-011			314
	Serial Interface RS-232 C, 2400, N, 8, 1	750-650/000-012			314
	Serial Interface RS-232 C, 4800, E, 7, 2	750-650/000-013			314
	Serial Interface RS-232 C, 4800, E, 8, 1	750-650/000-015			314
	Serial Interface RS-232 C, configurable	750-650/003-000		753-650/003-000	314
	Serial Interface RS-485, 9600, N, 8, 1	750-653	750-653/025-018	753-653	315
	Serial Interface RS-485, 9600, E, 7, 2	750-653/000-001			315
	Serial Interface RS-485, 9600, E, 8, 1	750-653/000-002			315
	Serial Interface RS-485, 19200, N, 8, 1, 5 bytes	750-653/000-006			315
	Serial Interface RS-485, 2400, N, 8, 1	750-653/000-007			315
	Serial Interface RS-485, configurable	750-653/003-000	750-653/025-000	753-653/003-000	315
	Serial Interface RS-232 C/RS-485	750-652	750-652/025-000	753-652	316
	TTY Interface, 9600, N, 8, 1	750-651			317
	TTY Interface, 9600, E, 8, 1	750-651/000-002			317
Bluetooth	*Bluetooth*® RF Transceiver	750-644			318
EnOcean	Radio Receiver Module	750-642			319
KNX	KNX/EIB/TP1 Module			753-646	320
DALI	DALI Multi-Master Module			753-647	321
LON	LON FTT Module			753-648	322
MP-Bus	MP-Bus Master Module	750-643			323
AS-Interface Master	AS-Interface Master	750-655		753-655	324
IO-Link Master	IO-Link Master	750-657			326
CAN Gateway	CAN Gateway	750-658			328
Data Exchange	Data Exchange Module	750-654			329

Serial Interface RS-232 C

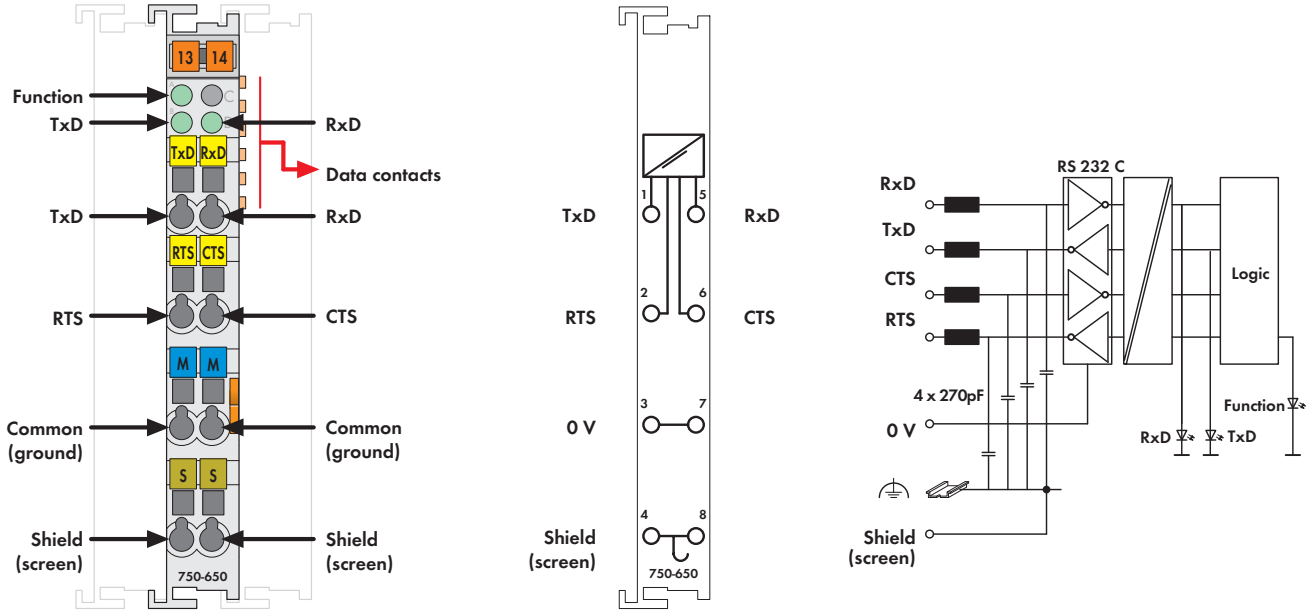

Fig. 750 Series
Delivered without miniature WSB markers

This interface allows the connection of any device which is equipped with a RS-232 C serial interface.

The interface works in accordance with the TIA/EIA-232-F, CCITT V.28/DIN 66259-1 standard.

The connected device may directly communicate over the fieldbus coupler with the control unit. The active communication channel works independently of the higher-level fieldbus system and allows full duplex operationup to 19200baud.

The RS-232 C interface guarantees high interference immunity because of the electrically isolated signals.

The shield (screen) is directly connected to the carrier rail.

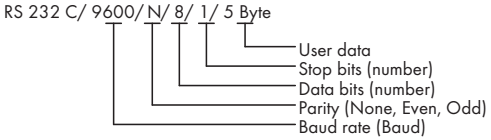

Description	Item No.	Pack. Unit
RS-232 C/ 9600/ N/ 8/ 1	**750-650**	1
RS-232 C/ 9600/ N/ 8/ 1/ 5 Byte	**750-650/000-001**	1
RS-232 C/ 9600/ E/ 7/ 2	**750-650/000-002**	1
RS-232 C/ 4800/ E/ 7/ 1	**750-650/000-004**	1
RS-232 C/ 9600/ E/ 8/ 1	**750-650/000-006**	1
RS-232 C/ 2400/ E/ 8/ 1	**750-650/000-009**	1
RS-232 C/ 19200/ N/ 8/ 1	**750-650/000-010**	1
RS-232 C/ 19200/ E/ 8/ 1	**750-650/000-011**	1
RS-232 C/ 2400/ N/ 8/ 1	**750-650/000-012**	1
RS-232 C/ 4800/ E/ 7/ 2	**750-650/000-013**	1
RS-232 C/ 4800/ E/ 8/ 1	**750-650/000-015**	1
RS-232 C/ Configurable	**750-650/003-000**	1
RS-232 C Interface (without connector)	**753-650**	1
RS-232 C/ Configurable (without connector)	**753-650/003-000**	1

Approvals

Conformity marking	CE
Korea Certification	[1]
Marine applications (versions upon request)	ABS, BV, DNV, GL, KR, LR, NKK, PRS, RINA
UL 508	
ANSI/ISA 12.12.01	Class I, Div. 2, Grp. ABCD, T4
TÜV 07 ATEX 554086 X	I M2 Ex d I Mb,
	II 3 G Ex nA IIC T4 Gc,
	II 3 D Ex tc IIIC T135°C Dc
IECEx TUN 09.0001 X	Ex d I Mb,
	Ex nA IIC T4 Gc,
	Ex tc IIIC T135°C Dc

[1] Does not apply to 750-650/003-000

Technical Data

Transmission channels	1 TxD / 1 RxD, full duplex
Baud rate	9600 baud (factory preset)
	1200 ... 19200 baud
	1200 ... 57600 baud
	(750-650/003-000, 753-650/003-000)
Bit skew	< 3 %
RS-232 line length (max.)	15 m
Buffer	128 bytes in/16 bytes out
Max. current consumption (internal)	55 mA
Power supply	via system voltage DC/DC
Isolation	500 V system/supply
Internal bit width	1 x 24 bits in/out (3 bytes user data)
	1 x 8 bits control/status
Wire connection	CAGE CLAMP®
Cross sections	0.08 mm² ... 2.5 mm² / AWG 28 ... 14
Strip lengths, 750/753 Series	8 ... 9 mm / 0.33 in
	9 ... 10 mm / 0.37 in
Width	12 mm
Weight	51.5 g
EMC immunity of interference	acc. to EN 61000-6-2, marine applications
EMC emission of interference	acc. to EN 61000-6-4, marine applications

Accessories

		Item No.	Pack. Unit
	753 Series Connectors	**753-110**	25
	Coding elements	**753-150**	100
	Miniature WSB Quick marking system		
	plain	**248-501**	5
	with marking	see Section 11	

Serial Interface RS-485

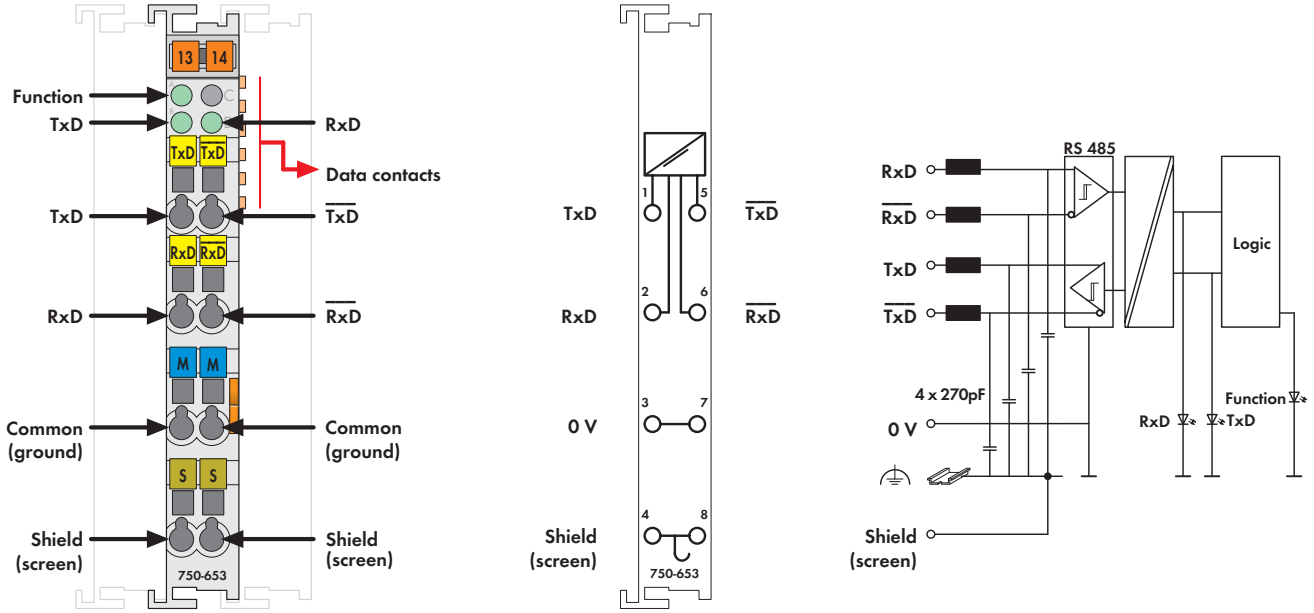

Fig. 750 Series
Delivered without miniature WSB markers

This interface allows the connection of any device which is equipped with a RS-485 serial interface.

The interface works inaccordance with the TIA/EIA-485-A, DIN 66259 standard.

The connected device may communicate over the fieldbus coupler with the control unit directly. The active communication channel works independently of the higher-level fieldbus system and allows full duplex operation up to 19200 baud.

The RS-485 interface guarantees high interference immunity because of the electrically isolated signals.

The shield (screen) is directly connected to the carrier rail.

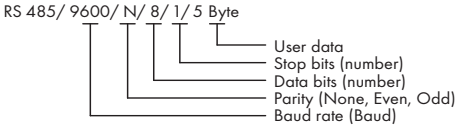

Description	Item No.	Pack. Unit
RS-485/ 9600/ N/ 8/ 1	**750-653**	1
RS-485/ 9600/ E/ 7/ 2	**750-653/000-001**	1
RS-485/ 9600/ E/ 8/ 1	**750-653/000-002**	1
RS-485/ 19200/ N/ 8/ 1/ 5 bytes	**750-653/000-006**	1
RS-485/ 2400/ N/ 8/ 1	**750-653/000-007**	1
RS-485 / Configurable	**750-653/003-000**	1
RS-485 / Configurable/T	**750-653/025-000**	1
Extended temperature range: -20 °C ... +60 °C		
RS-485/ 9600/N/8/1/5 bytes/T	**750-653/025-018**	1
Extended temperature range: -20 °C ... +60 °C		
RS-485/ 9600/ N/ 8/ 1 (without connector)	**753-653**	1
RS-485 / configurable (without connector)	**753-653/003-000**	1

Approvals

Conformity marking	CE
Korea Certification	[1]
Marine applications (versions upon request)	ABS, BV, DNV, GL, KR, LR, NKK, PRS, RINA
cULus UL 508	
cULus ANSI/ISA 12.12.01	Class I, Div. 2, Grp. ABCD, T4
TÜV 07 ATEX 554086 X	I M2 Ex d I Mb,
	II 3 G Ex nA IIC T4 Gc,
	II 3 D Ex tc IIIC T135°C Dc
IECEx TUN 09.0001 X	Ex d I Mb,
	Ex nA IIC T4 Gc,
	Ex tc IIIC T135°C Dc

[1] Does not apply to 750-653/000-007 and 750-653/025-018

Technical Data

Transmission channels	1 TxD / 1 RxD, full duplex
Baud rate	9600 baud (factory preset)
	1200 ... 19200 baud
Bit transfer	ISO 8482 / DIN 66259 - 4
Line length	approx. 1000 m twisted pair
Buffer	128 bytes in/16 bytes out
Current consumption (internal)	65 mA
Power supply	via system voltage DC/DC
Isolation	500 V system/supply
Internal bit width	1 x 24 bits in/out (3 bytes user data)
	1 x 8 bits control/status
Wire connection	CAGE CLAMP®
Cross sections	0.08 mm² ... 2.5 mm² / AWG 28 ... 14
Strip lengths, 750/753 Series	8 ... 9 mm / 0.33 in
	9 ... 10 mm / 0.37 in
Width	12 mm
Weight	51.7 g
EMC immunity of interference	acc. to EN 61000-6-2, marine applications
EMC emission of interference	acc. to EN 61000-6-4, marine applications

Accessories

	Item No.	Pack. Unit
753 Series Connectors	**753-110**	25
Coding elements	**753-150**	100
Miniature WSB Quick marking system		
plain	**248-501**	5
with marking	see Section 11	

Serial Interface RS-232 / RS-485

Configurable

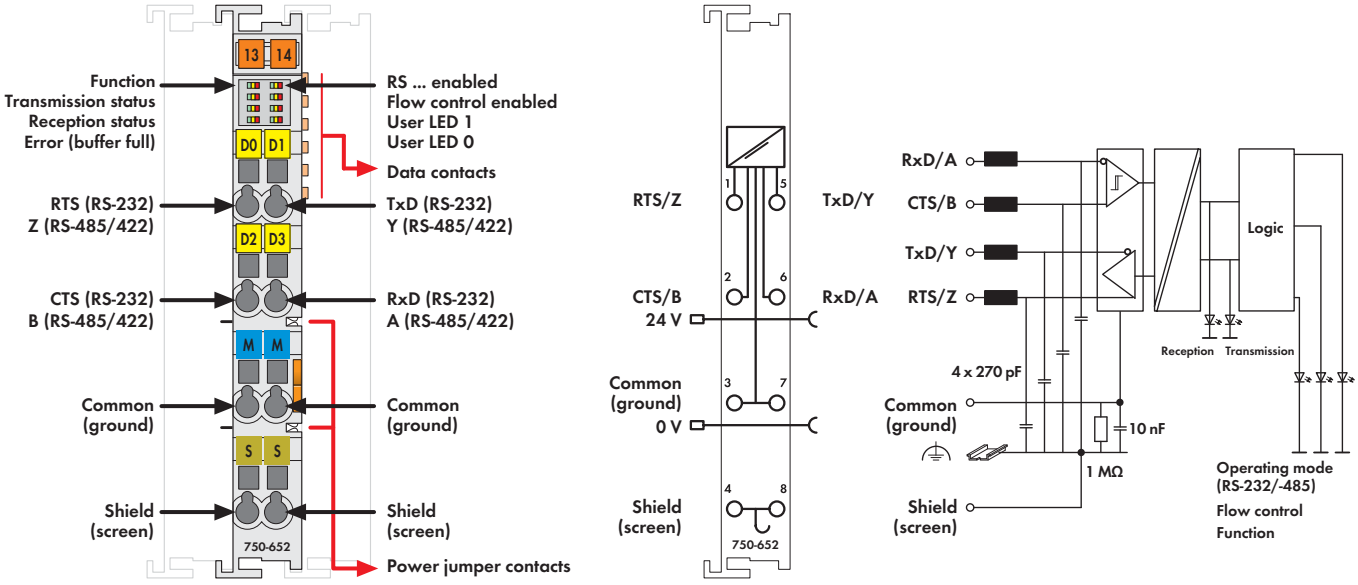

Delivered without miniature WSB markers

The serial interface module connects RS-485/422 or RS-232 interface devices to the WAGO-I/O-SYSTEM 750. It also provides gateways between the serial interface and the fieldbus systems supported by the WAGO-I/O-SYSTEM 750. No higher protocol level is required by the module. Communication is completely transparent to the fieldbus master, which provides a wide range of applications for the serial interface module. If required, communication protocols can be configured via fieldbus master.
The 2560-byte input buffer provides for high data transmission rates. At lower transmission rates, the data received in lower priority tasks is evaluated without data loss.
The 512-byte output buffer provides fast transmission of larger data strings.

The module can be configured via WAGO-I/O-CHECK or GSD files. Flexible baud rate and data width selection enable easy adaptation to applications.

Compatibility with couplers/controllers:
See manual, Section 3 "Device Description"

Description	Item No.	Pack. Unit
RS-232 / RS-485 configurable	**750-652**	1
RS-232 / RS-485 configurable/T	**750-652/025-000**	1
Extended temperature range: -20 °C ... +60 °C		
RS-232 / RS-485 configurable (without connector)	**753-652**	1

Accessories	Item No.	Pack. Unit
WAGO-I/O-CHECK, RS-232 kit	**759-302**	1
753 Series Connectors	**753-110**	25
Coding elements	**753-150**	100
Miniature WSB Quick marking system		
plain	**248-501**	5
with marking	see Section 11	

Approvals

Conformity marking	CE
Korea Certification	[1]
Marine applications (versions upon request)	ABS, BV, DNV, GL, KR, LR, NKK, PRS, RINA
UL 508	
ANSI/ISA 12.12.01	Class I, Div. 2, Grp. ABCD, T4
TÜV 07 ATEX 554086 X	I M2 Ex d I Mb, II 3 G Ex nA IIC T4 Gc, II 3 D Ex tc IIIC T135°C Dc
IECEx TUN 09.0001 X	Ex d I Mb, Ex nA IIC T4 Gc, Ex tc IIIC T135°C Dc

[1] Does not apply to 753-652

Technical Data

Transmission channels	1 TxD / 1 RxD, full duplex, half duplex 7 or 8 bit data, 1 or 2 stop bit
Baud rate	9,600 baud (default setting) 300 baud ... 115,200 baud
Bit transfer	RS-485/-422: ISO 8482 / DIN 66259 - 4; RS-232: EIA/TIA-232-F
Line length	RS-485/-422: max. approx. 1000 m twisted pair, RS-232: max. 40 m
Buffer	2560 bytes in / 512 bytes out
Current consumption (internal)	85 mA
Power supply	via system voltage DC/DC
Isolation	500 V system/supply
Internal bit width	1 x 46/1 x 24/1 x 6 bytes in/out (parametrizable), 2 bytes control/status
Wire connection	CAGE CLAMP®
Cross sections	0.08 mm² ... 2.5 mm² / AWG 28 ... 14
Strip lengths	8 ... 9 mm / 0.33 in 9 ... 10 mm / 0.37 in
Width	12 mm
Weight	51 g
EMC immunity of interference	acc. to EN 61131-2, marine applications
EMC emission of interference	acc. to EN 61131-2, marine applications

TTY Interface - 20 mA Current Loop

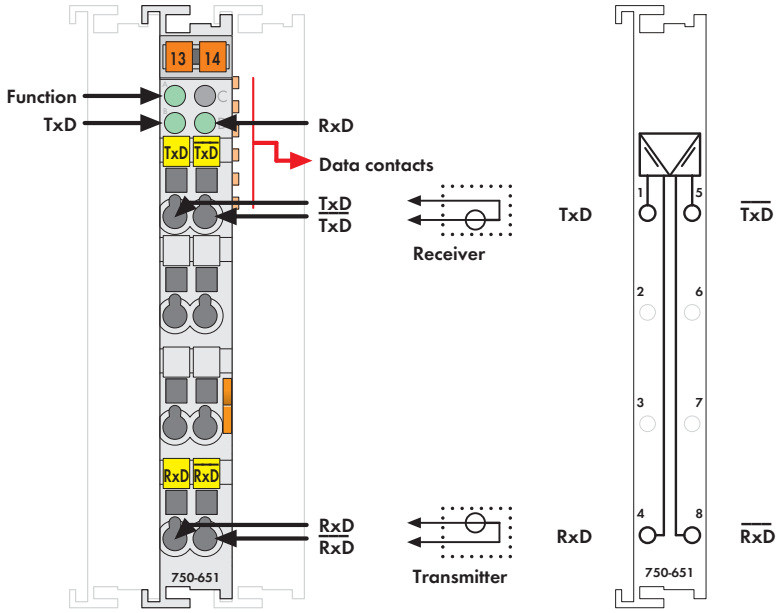

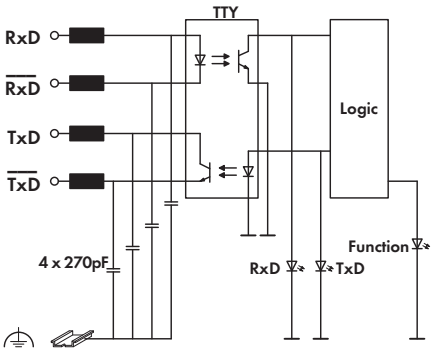

Delivered without miniature WSB markers

This interface allows the connection of devices which are equipped with a 20mA current interface.

The interface is working in active, semi-active or passive operation mode. The module communicates with the control unit over the fieldbus coupler.

The active communication channel works independently of the higher-level fieldbus system and allows full duplex operation up to 19200 baud.

The TTY interface guarantees high interference immunity because of the electrical isolation and the driven loop current.

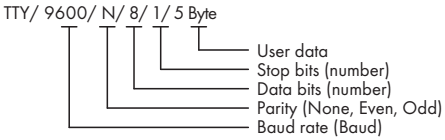

Description	Item No.	Pack. Unit
TTY/ 9600/ N/ 8/ 1	**750-651**	1
TTY/ 9600/ E/ 8/ 1	**750-651/000-002**	1

Accessories		Item No.	Pack. Unit
Miniature WSB Quick marking system			
	plain	**248-501**	5
	with marking	see Section 11	

Approvals

Conformity marking	CE
Korea Certification	
Marine applications (versions upon request)	ABS, BV, DNV, GL, KR, LR, NKK, PRS, RINA
cULus UL 508	
cULus ANSI/ISA 12.12.01	Class I, Div. 2, Grp. ABCD, T4
DEKRA 11 ATEX 0203 X	II 3 G Ex nA II T4

Technical Data

Transmission channels	1 TxD / 1 RxD, full duplex
Baud rate	9600 baud (factory preset)
	1200 ... 19200 baud
Bit transfer	2 x 20 mA
Load impedance	< 500 Ω
Line length	approx. 1000 m twisted pair
Buffer	128 bytes in/16 bytes out
Current consumption (internal)	55 mA
Power supply	via system voltage DC/DC
Isolation	500 V system/supply
Internal bit width	1 x 24 bits in/out (3 bytes user data)
	1 x 8 bits control/status
Wire connection	CAGE CLAMP®
Cross sections	0.08 mm² ... 2.5 mm² / AWG 28 ... 14
Strip lengths	8 ... 9 mm / 0.33 in
Width	12 mm
Weight	48.5 g
EMC immunity of interference	acc. to EN 61000-6-2, marine applications
EMC emission of interference	acc. to EN 61000-6-4, marine applications

Bluetooth®/RF Transceiver

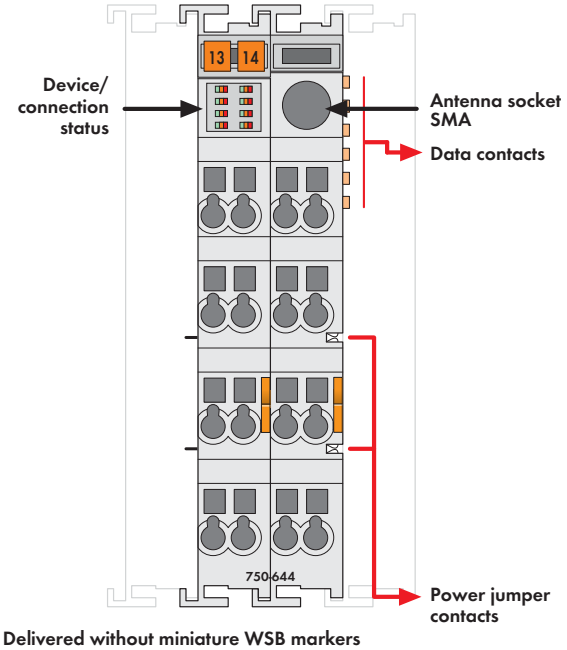

Delivered without miniature WSB markers

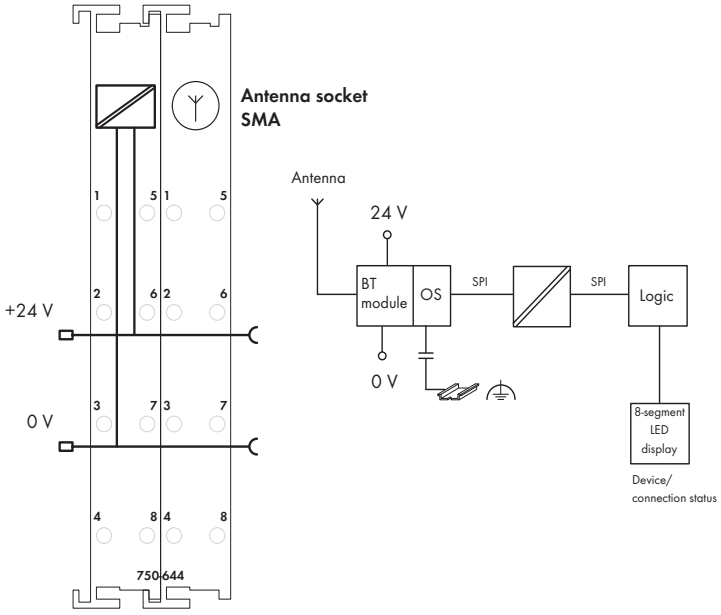

The 750-644 I/O Module permits the wireless exchange of process data with up to seven other devices via Bluetooth® 2.0 radio technology. Interoperability with Bluetooth® devices is made non-proprietary via PAN and SPP Bluetooth® profiles. A special profile for time-sensitive applications is also available.

Reliable connections over distances of up to 1000m are possible using the WAGO 758-912 external antenna.

The module's extended diagnostic functions include cyclic and acyclic state information. For quick on-site diagnostics, main information on operational status and radio connection is also displayed via 8 LEDs.

The I/O module can be operated with all standard fieldbus couplers/controllers from the WAGO-I/O-SYSTEM 750. Module configuration is performed locally via WAGO-I/O-CHECK.

Description		Item No.	Pack. Unit
Bluetooth®/RF Transceiver		**750-644**	1

Accessories		Item No.	Pack. Unit
Miniature WSB Quick marking system			
	plain	**248-501**	5
	with marking	see Section 11	
External antenna	WLAN/Bluetooth 2.4 GHz	**758-912**	1

Approvals

FC	FCC approval (This device complies with part 15 of FCC rules)
Bluetooth	Bluetooth® approval
Conformity marking	CE
Korea Certification	
UL 508	
ANSI/ISA 12.12.01	Class I, Div. 2, Grp. ABCD, T4
TÜV 07 ATEX 554086 X	I M2 Ex d I Mb, II 3 G Ex nA IIC T4 Gc, II 3 D Ex tc IIIC T135°C Dc
IECEx TUN 09.0001 X	Ex d I Mb, Ex nA IIC T4 Gc, Ex tc IIIC T135°C Dc

Technical Data

Wireless technology	Bluetooth® 2.0 + EDR
Topology	Piconet (1 master, max. 7 slaves)
Coexistence	AFH and adaptive transmission power
Profiles	SPP, PAN
Operating modes	Communication mode with ad-hoc profile for high connectivity and real-time profile for time-critical applications, as well as configuration mode
Frequency band	2402-2480 MHz (license-free ISM band)
Transmitter power	up to 20 dBm (Bluetooth® Class 1)
Receiver sensitivity	-94 dBm
Transmission range	max. 1000 m in open field, 100 m in buildings (using a WAGO external antenna, item no. 758-912)
Voltage supply (Bluetooth)	via 24 V DC field supply
Voltage supply (internal)	via system voltage DC/DC
Current consumption (Bluetooth)	approx. 8 mA, max. 35 mA
Current consumption (internal)	approx. 20 mA
Isolation	500 V antenna/system
Internal bit width	12, 24, 48 bytes configurable; i ncl. 1 byte control/status
Diagnostics (via visual indicator)	Device status, connection status [1]
Diagnostics (via process image)	Device status, connection status [1], time monitoring
Configuration	WAGO-I/O-CHECK and WAGO-I/O-PRO CAA
Dimensions (mm) W x H x L	24 x 64* x 100; *+ excess length of the SMA socket approx. 6.5 mm
Weight	85 g
EMC immunity of interference	acc. to EN 61000-6-2, EN 61131-2
EMC emission of interference	acc. to EN 61000-6-3, EN 61131-2

[1] Quality of radio connection, signal strength, interference

Radio Receiver Module

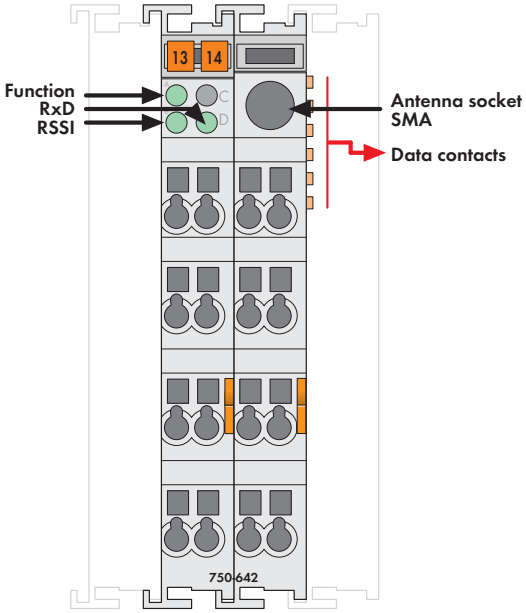

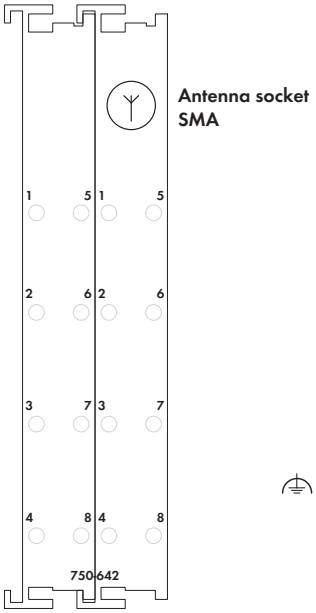

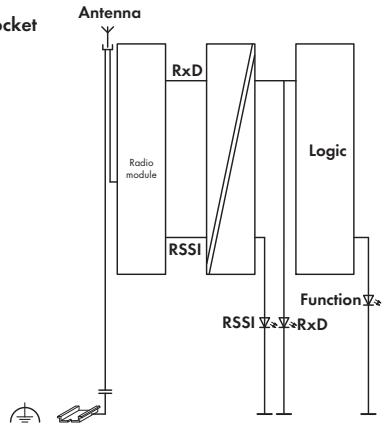

Delivered without miniature WSB markers

The 750-642 I/O Module receives radio telegrams from maintenance-free, battery-less and wireless switches and sensors based on EnOcean radio technology.
The module can be used with any controller of the WAGO-I/O-SYSTEM 750. Preprogrammed function blocks make integration easy.
The energy required for switch or sensor operation is produced by converting one type of energy (heat, solar or mechanical energy) into usable electrical energy. The radiated energy from the transmitter modules is around one million times smaller than mobile phones. Almost any number of sensors is possible. However, the maximum number is around 100 transmitters per module, due to the increasing density of switches/sensors.

Four billion code numbers provide for clear transmitter/receiver assignment. Repeated, time-shifted transmission of the radio telegrams, at very short transmission times, results in a high level of protection against external interference. The maximum transmission range is approx. 300 meters in open field. Depending on the building materials used and on the spatial geometry, the range may be reduced to typically 30 meters (see manual for more information). The LED (RSSI) indicates a sufficient input level.
*Documentation available in German and English.
An SMA socket which is integrated into the housing allows the connection of an external antenna. The 758-910 external antenna has a magnetic stand and a 2.5m long coax cable with SMA plug (available as an accessory).

Description		Item No.	Pack. Unit
Radio Receiver Module		**750-642**	1

Accessories		Item No.	Pack. Unit
Miniature WSB Quick marking system			
	plain	**248-501**	5
	with marking	see Section 11	
External antenna	GSM 900/1800	**758-910**	1

Approvals

Conformity marking RTTE	www.wago.com
Conformity marking	CE
Korea Certification	
cULus UL 508	
cULus ANSI/ISA 12.12.01	Class I, Div. 2, Grp. ABCD, T4
TÜV 07 ATEX 554086 X	I M2 Ex d I Mb, II 3 G Ex nA IIC T4 Gc, II 3 D Ex tc IIIC T135°C Dc
IECEx TUN 09.0001 X	Ex d I Mb, Ex nA IIC T4 Gc, Ex tc IIIC T135°C Dc

Technical Data

Frequency band	868.3 MHz
Transmission range	300 m in open field (typ. in buildings see manual)
Transmission protocol (radio telegram)	EnOcean
Current consumption (internal)	80 mA
Power supply	via system voltage DC/DC
Isolation	500 V antenna connection/system
Internal bit width	1 x 24 bits in/out (3 bytes user data) 1 x 8 bits control/status
Dimensions (mm) W x H x L	24 x 64* x 100 *+ excess length of the SMA socket approx. 6.5 mm
Weight	80 g
EMC immunity of interference	acc. to EN 61000-6-2
EMC emission of interference	acc. to EN 61000-6-3

KNX/EIB/TP1 Module

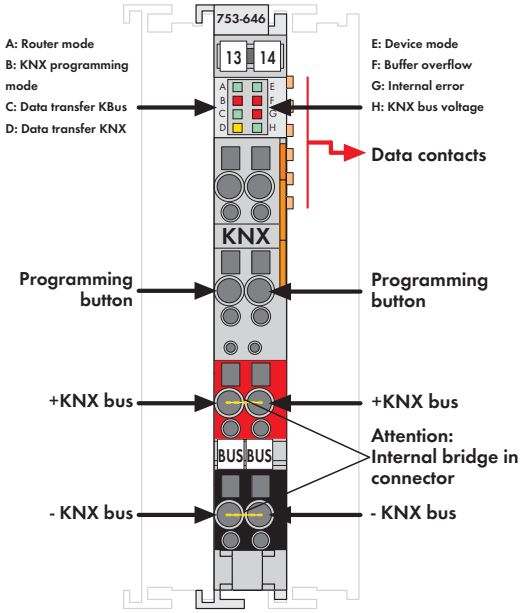

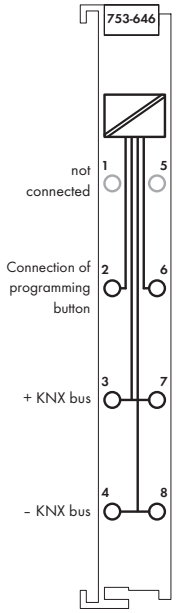

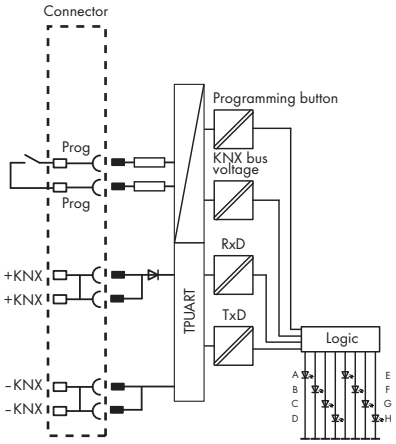

Delivered without miniature WSB markers

The 753-646 KNX/EIB/TP1 I/O Module serves to connect a KNX/EIB/TP1 network. The module supports two different functions:

1. Device mode: With this module, all programmable controllers (*1) that are relevant for building automation can be connected to a KNX/TP1 network. In a KNX network, the module appears as a standard KNX device and is linked using the ETS Professional commissioning tool. The module supports a maximum of 253 communication objects with any DPTs, 254 group addresses and 254 associations. The application is programmed using WAGO-I/O-PRO CAA. An ETS plugin, which is included in the WAGO product database, is required so that the data from the application program can be allocated to the group addresses.

*1: See www.wago.com: Documentation; WAGO I/O System 753; Specialty Modules; KNX/EIB/TP1 Module; Device Mode

2. Router mode: When the 750-849 Series KNXnet/IP Controller is connected to the first 753-646 Series KNX/EIB/TP1 Module, the device can be operated as a KNXnet/IP router. The module is switched to router mode automatically. An application program is not required for operation in router mode. Additional modules that are connected to a KNXnet/IP controller are addressed in device mode by the application.

The 753 Series connector with internally bridged contacts (3/7 and 4/8) is part of the delivery.

Both an external KNX voltage supply and ETS Professional are required to operate the KNX/EIB/TP1 I/O module.

Description	Item No.	Pack. Unit
KNX/EIB/TP1 Module	**753-646**	1

Accessories		Item No.	Pack. Unit
WAGO ETS plug-in (included in WAGO ETS product database)		see Section 1	
Miniature WSB Quick marking system			
	plain	**248-501**	5
	with marking	see Section 11	

Approvals

KNX certified	KNX
Conformity marking	CE
Korea Certification	
Marine applications	ABS, BV, DNV, GL, KR, LR, NKK, PRS, RINA
UL 508	

Technical Data

KNX/TP1 bus specification		1.0
Voltage supply (KNX)		via KNX power supply unit
Current consumption (KNX)		5 mA
Baud rate (KNX)		9.6 kbaud
Programming		using WAGO-I/O-PRO CAA (device mode)
Commissioning (KNX side)		with ETS plugin; programming button-bridge 2/6
Diagnostic information		via FbKNX_Master_646 function block (device mode)
Fault behavior		via FbKNX_Master_646 function block (device mode)
Voltage supply (internal)		via system voltage DC/DC
Current consumption (internal)		max. 25 mA
Isolation		2.5 kV rms
Internal bit width		24 bytes
Programming button		Bridge 2/6
Device mode:		
Number of communication objects		253
Number of group addresses		254
Number of associations		254
Supported DPTs		All (*acc. to KNX Specification 03_07_02 Data Point Types V 1.0)
Router mode:		
Can be used as	-Line coupler	yes
	- Area coupler	yes
	- KNX interface	yes
Wire connection		CAGE CLAMP®
Cross sections		0.08 mm² ... 2.5 mm² / AWG 28 ... 14
Strip lengths		9 ... 10 mm / 0.37 in
Width		12 mm
Weight		52.5 g
EMC immunity of interference		acc. to EN 61000-6-2, marine applications
EMC emission of interference		acc. to EN 61000-6-3, marine applications

DALI Multi-Master Module

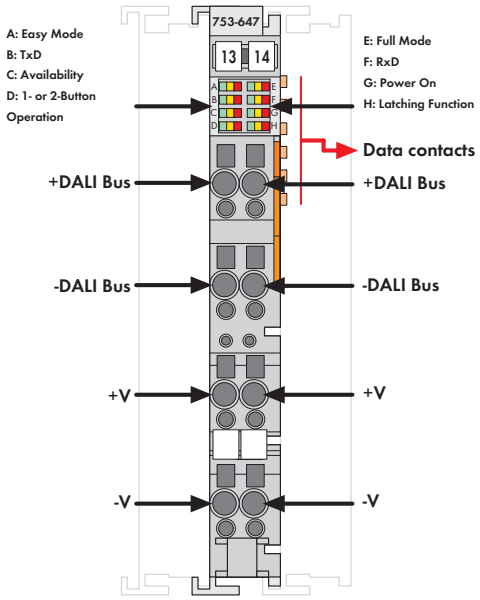

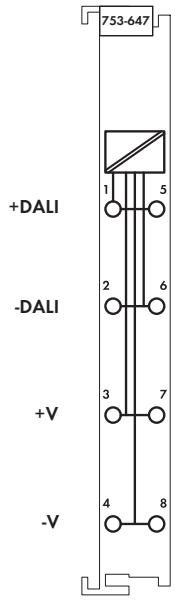

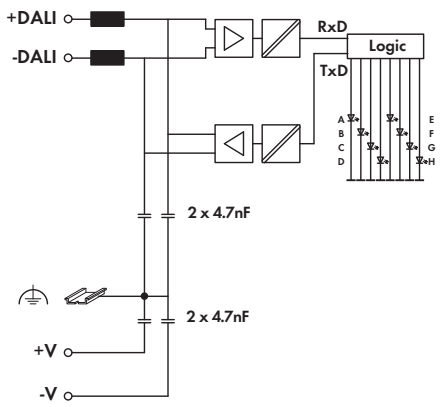

The 753-647 DALI Multi-Master Module complies with DALI standard according to IEC 62386. This manufacturer-independent protocol ensures interoperability of DALI devices in lighting applications.
The 1/2 inch (12 mm) wide module is a DALI interface used in combination with WAGO 750 Series Controllers and Modules (e.g., BACnet, KNX, EnOcean, LON, MODBUS).
Each DALI Multi-Master Module supports 64 addresses for electronic control gears (ECGs) and 64 addresses for DALI sensors. Each DALI ECG can be assigned to 16 groups and 16 scenes. The 753-647 Module also offers 16 additional virtual groups on the DALI bus.
Using the WAGO-I/O-SYSTEM, DALI control devices are seamlessly integrated with all supported BA and fieldbus protocols. Several DALI masters can be connected to a single fieldbus node. The maximum number of modules that can be connected to a controller depends on the memory required by the application. Fieldbus nodes are programmed via WAGO-I/O-PRO software. WAGO provides a comprehensive IEC-61131-3 library of function blocks, simplifying the creation of complex lighting applications.
Alternatively, an "Easy Mode" allows lighting functions to be easily controlled without any complicated PLC programming. The 753-647 Module is future-proof and upgradable to the latest DALI release. A comprehensive and easy-to-use commissioning and maintenance tool is available as stand-alone application or as integrated WAGO-I/O-CHECK software component.
The two following power supply options are available for the 753-647 Series:
1. The 753-620 DALI Multi-Master DC/DC Converter is used to supply one single module.
2. The 787-1007 Power Supply is used to supply several modules.

Description	Item No.	Pack. Unit
DALI Multi-Master Module	**753-647**	1

Accessories	Item No.	Pack. Unit
DALI Configurator	see Section 1 or download: www.wago.com	
WAGO-I/O-CHECK, RS-232 kit	**759-302**	1
Miniature WSB Quick marking system		
plain	**248-501**	5
with marking	see Section 11	
753 Series Connectors	**753-110**	25
Coding elements	**753-150**	100

753 Series pluggable connector and coding accessories are part of the delivery.

Approvals

Conformity marking CE
cULus UL 508

Technical Data

DALI specification	DIN IEC 62386 only in conjunction with 753-620 or 787-1007 Power Supplies
Number of slaves (DALI)	addressable: 64 control devices + 64 control gears
Module power supply at +V and -V	18 V via 753-620 / 787-1007 Power Supplies
Transmission channel	1
Technical information acc. to DALI specification	
Maximum supply current	250 mA
Guaranteed supply current	200 mA
Current consumption (internal)	85 mA
Power supply	via system voltage (DC/DC)
Isolation	1500 V DC DALI bus/Internal data bus
Internal bit width	24-byte data
Commissioning	via WAGO-I/O-CHECK
Configuration	with WAGO DALI Configurator
Programming	via WAGO-I/O-PRO
Wire connection	CAGE CLAMP®
Cross sections	0.08 mm² ... 2.5 mm² / AWG 28 ... 14
Strip lengths	9 ... 10 mm / 0.37 in
Width	12 mm
Weight	55 g
EMC immunity of interference	acc. to EN 61000-6-2*, marine applications
EMC emission of interference	acc. to EN 61000-6-3*, marine applications
	*Only in conjunction with 753-620 / 787-1007 DC/DC Converter

LON FTT Module

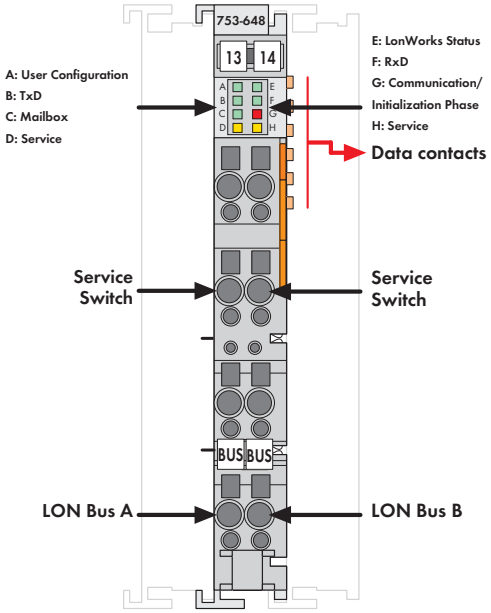

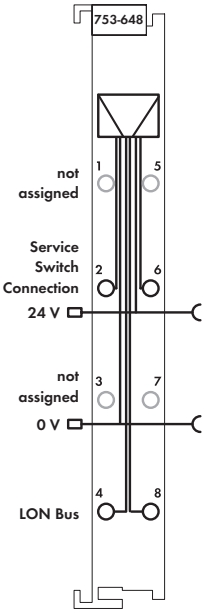

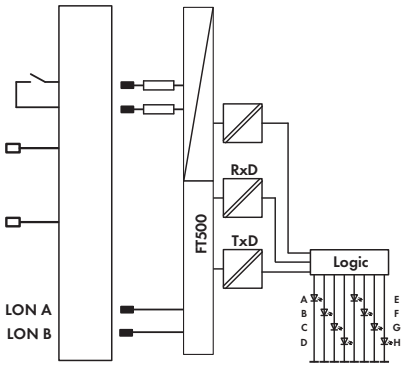

The 753-648 LON FTT Module complies with the ISO/IEC 14908 standard. The 1/2 inch (12 mm) wide I/O module connects LON to the 750 Series controller and modules (e.g., BACnet, KNX, EnOcean, DALI, MODBUS). It is a full-fledged and flexible LON device within LonWorks FT or LP networks. The module's network variable interface defines 249 network variables of any type and supports both LonMark objects and configuration properties.
LON network interface is defined via LON Configurator, a comprehensive and easy-to-use WAGO-I/O-PRO software tool. Interface representations are programmed via IEC-61131-3 and can be easily used for further applications. Fieldbus nodes are programmed via WAGO-I/O-PRO software. WAGO provides a comprehensive IEC-61131-3 library of function blocks, simplifying the creation of complex control applications.

A maximum of two modules may be connected to one controller. However, the number of modules depends on the memory required by the IEC application and the type of controller. The module is supplied via 24V power jumper contacts.

Description	Item No.	Pack. Unit
LON FTT Module	**753-648**	1

Accessories		Item No.	Pack. Unit
LON-LIB		Download: www.wago.com	
LON Configurator		see Section 1	
WAGO-I/O-PRO V2.3, RS-232 kit		**759-333**	1
Miniature WSB Quick marking system			
	plain	**248-501**	5
	with marking	see Section 11	
753 Series Connectors		**753-110**	25
Coding elements		**753-150**	100

753 Series pluggable connector and coding accessories are part of the delivery.

Approvals

Conformity marking	CE
UL 508	
ANSI/ISA 12.12.01	Class I, Div. 2, Grp. ABCD, T4

Technical Data

Transmission medium	Twisted Pair - FTT
Max. length of fieldbus segment	500 m (free topology);
	2700 m (bus topology)
Topology	acc. to LON specification
Baud rate	78 kbps
Commissioning	via WAGO-I/O-CHECK
Programming	via WAGO-I/O-PRO
Interface to LON network	programmable via WAGO-I/O-PRO
Number of network variables	max. 254 (249 for application)
Number of aliases	max. 127
ISI (Interoparable Self-Installation)	no
DMF (Direct Memory Files)	no
Processor	FT5000
Transceiver	FTX2
Transmission channel	1
Current consumption (internal)	30 mA
Power supply	via system power
Isolation	500 V system/supply
Internal bit width	24-byte data
Wire connection	CAGE CLAMP®
Cross sections	0.08 mm² ... 2.5 mm² / AWG 28 ... 14
Strip lengths	9 ... 10 mm / 0.37 in
Width	12 mm
Weight	55 g
EMC immunity of interference	acc. to EN 61000-6-2
EMC emission of interference	acc. to EN 61000-6-3

LON®, LonWorks® and LonMark® are registered trademarks of Echelon Corporation.

MP-Bus Master Module

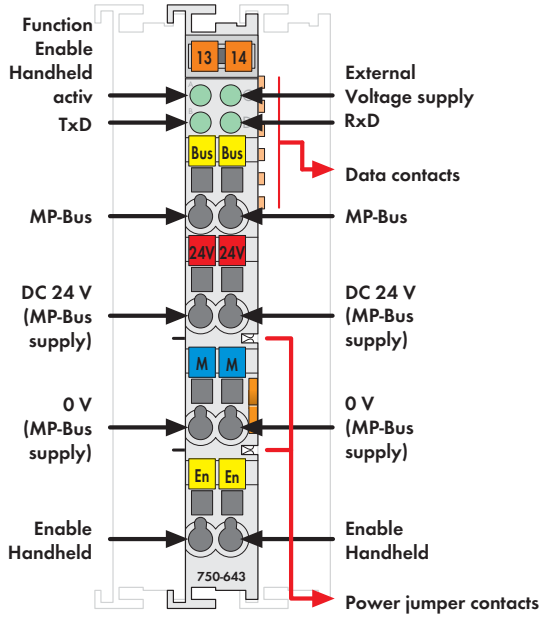

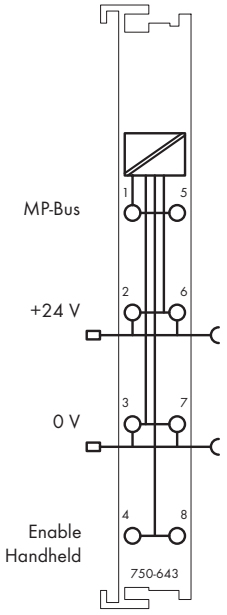

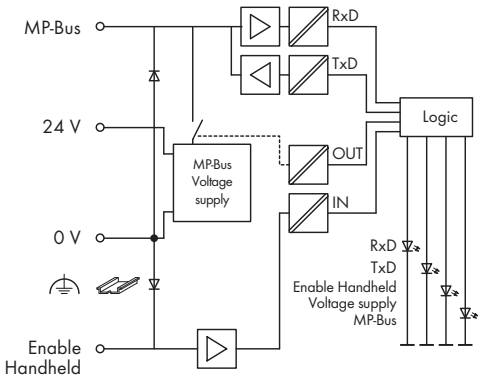

Delivered without miniature WSB markers

The 750-643 I/O Module acts as a master for the MP-Bus (Multi Point Bus of the Swiss company Belimo) and allows the bus to be integrated into a higher level bus network such as ETHERNET or LonWorks. The MP-Bus serves to control HVAC actuators like dampers, regulator valves or VAV air volume control. Another product series with MP-Bus connection is FLS (window ventilation system) from Belimo.Devices that are equipped with an MP-Bus connection, e.g. the Belimo MFT actuator series, can communicate with a higher level control via bus cable.

The actuators have connections for active and passive sensors (temperature, humidity, ON/OFF switch) and hence can also be accessed via MP-Bus. An MP Bus Master, i.e. the WAGO I/O module, can manage up to 8 slaves (actuators) + 8 sensors (1 sensor per slave) via a common bus cable which reduces the wiring of sensors and actuators considerably (cable lengths of MP-Bus cables see Belimo documentation). In order to parameterize the Belimo actuators, the I/O module can be connected to a Belimo parameterization tool (handheld control unit or Belimo PC tool). For this purpose use the "Enable Handheld" contact. If an external parameterization tool (or 24V) is connected, the module switches off the MP-Bus supply.

Description	Item No.	Pack. Unit
MP Bus Master module	**750-643**	1

Accessories		Item No.	Pack. Unit
Miniature WSB Quick marking system			
	plain	**248-501**	5
	with marking	see Section 11	

Approvals

Conformity marking	CE
Korea Certification	
UL 508	
ANSI/ISA 12.12.01	Class I, Div. 2, Grp. ABCD, T4
TÜV 07 ATEX 554086 X	I M2 Ex d I Mb, II 3 G Ex nA IIC T4 Gc, II 3 D Ex tc IIIC T135°C Dc
IECEx TUN 09.0001 X	Ex d I Mb, Ex nA IIC T4 Gc, Ex tc IIIC T135°C Dc

Technical Data

MP Bus specifications	PP/MP specifications V1.21 from Belimo (Valid since 1.10.2002)
No. of slaves	max. 8
Voltage supply (MP-Bus)	24 VDC
Current consumption (MP-Bus)	25 mA without motor current (for MP-Bus) if the motors are supplied via the MP-Bus module, all motor currents must be added
Current consumption (internal)	15 mA
Power supply	via system voltage DC/DC
Isolation	500 V eff MP-bus/system
Internal bit width	1 byte C/S, 7 byte data
Wire connection	CAGE CLAMP®
Cross sections	0.08 mm² ... 2.5 mm² / AWG 28 ... 14
Strip lengths	8 ... 9 mm / 0.33 in
Width	12 mm
Weight	51.4 g
EMC immunity of interference	acc. to EN 61000-6-2
EMC emission of interference	acc. to EN 61000-6-3

PROFIBUS
ETHERNET TCP/IP
DeviceNet
CANopen

PROFIBUS DP

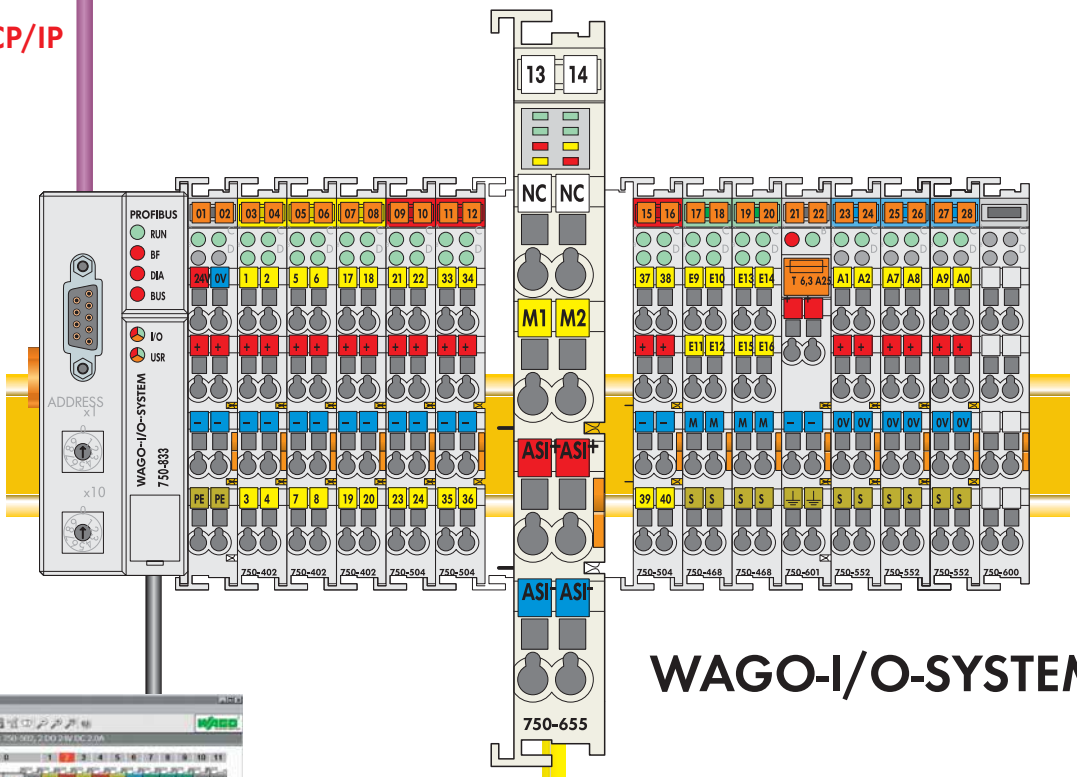

WAGO-I/O-SYSTEM

Configuration via WAGO-I/O-CHECK for example

ASI INTERFACE

IP20

DI DO

Slaves Digital Input/ Digital Output

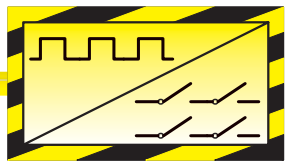

Safety at Work Monitor

M

Motor Connections

IP67

AI AO

Slaves Analog Input/ Analog Output

DI DI

Safety at Work Slave

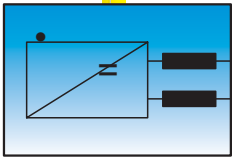

AS-Interface Power Supply Unit

WAGO AS-Interface Master

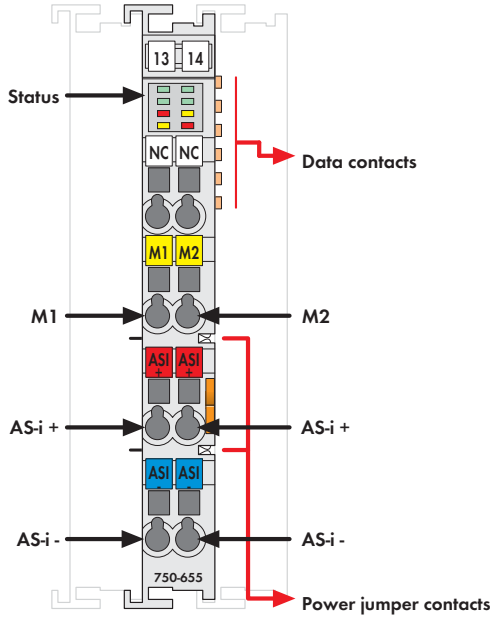

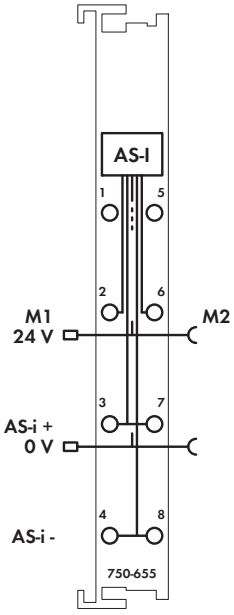

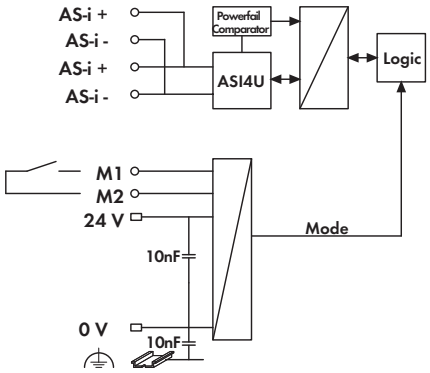

Delivered without miniature WSB markers

The 75x-655 AS-I Master Module connects AS-Interface systems to a higher-level fieldbus.
The module acts as a master for the AS-Interface and as a slave for the fieldbus.
The 75x-655 AS-I Master Module is an M4 master per AS-Interface V3.0 Specification. This means:

- Up to 62 AS-Interface slaves can be connected per AS-I line
- Analog signal transfer is integrated in the masters
- Slave profile support complies with V3.0
- Combined 1-5 transaction types and acyclic write/read services are implemented.

The AS-I functions are provided both cyclically and acyclically via the fieldbus. In cyclic data transfer, up to 32 bytes of I/O data are transferred for the AS-I line binary data. Free cyclic process image areas can be mapped with analog values. Furthermore, analog signals and all other commands and data of the new AS-I specification can be transferred in a management channel via the fieldbus.
Diagnostics, which go far beyond the AS-I specifications, simplify the detection of both sporadic configuration errors and AS-I communication interferences.
An auto-installation mode allows an AS-Interface network to be created via sequential slave installation, with no addressing tool required.
Both signal transmission and operating status, as well as trouble-free internal data bus communication are indicated via LEDs.

Description	Item No.	Pack. Unit
AS-Interface Master M4 V3.0	**750-655**	1
AS-Interface Master M4 V3.0 (without connector)	**753-655**	1

Accessories		Item No.	Pack. Unit
	753 Series Connectors	**753-110**	25
	Coding elements	**753-150**	100
	Miniature WSB Quick marking system		
	plain	**248-501**	5
	with marking	see Section 11	

Approvals

AS-Interface certificate	ZU 50601
Conformity marking	CE
Korea Certification	
Marine applications	ABS, BV, DNV, GL, KR, LR, NKK, PRS, RINA
UL 508	
ANSI/ISA 12.12.01	Class I, Div. 2, Grp. ABCD, T4
TÜV 07 ATEX 554086 X	I M2 Ex d I Mb, II 3 G Ex nA IIC T4 Gc, II 3 D Ex tc IIIC T135°C Dc
IECEx TUN 09.0001 X	Ex d I Mb, Ex nA IIC T4 Gc, Ex tc IIIC T135°C Dc

Technical Data

AS-I specification	3.0
No. of slaves	up to 62
Current consumption (AS-I)	40 mA
Voltage supply (AS-I)	26.5 V ... 31.6 V
Max. length of AS-I cable	100 m (300 m through repeater)
Cycle time AS-I	0.3 ms ... 10 ms, depending on the number of slaves
Configuration	via process image, WAGO-I/O-CHECK
Transmission channel	1
Max. current consumption (internal)	55 mA
Power supply	via system voltage DC/DC
Isolation	500 V system/supply/AS-I
Bit width	max. 12 ... 48 bytes, configurable including 1 byte control/status
Wire connection	CAGE CLAMP®
Cross sections	0.08 mm² ... 2.5 mm² / AWG 28 ... 14
Strip lengths, 750/753 Series	8 ... 9 mm / 0.33 in 9 ... 10 mm / 0.37 in
Width	12 mm
Weight	56 g
EMC immunity of interference	acc. to EN 61000-6-2, marine applications
EMC emission of interference	acc. to EN 61000-6-4, marine applications

4-Channel IO-Link Master

Automation right up to the last meter ...
Increasingly complex products, manufacturing flexibility and high demands on quality assurance require intelligent, configurable and programmable sensors. IO-Link streamlines required, varying interfaces for connecting to a control system and tooling to fulfill these demands.
A 3-wire connection can communicate process data (as single bits, bytes and data blocks for input and output data). It also communicates acyclic data (for identification, configuration, parameterization and diagnostics) with up to 230.4 kbaud to both sensors and actuators..
The functions and performance data are defined in device description files for master and device; these are easy to customize via WAGO-I/O-CHECK.
If a device must be replaced, the configuration and parameterization can be automatically restored without maintenance personnel.
Project design, installation and operation are simplified!

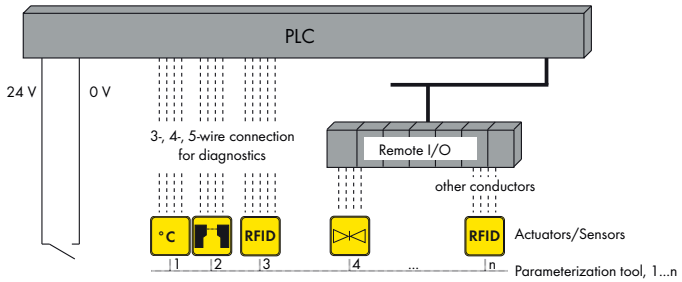

Complex sensors often require different interfaces for binary or analog process value transmission, as well as for configuration and parameter setting. This requires different proprietary configuration tools.

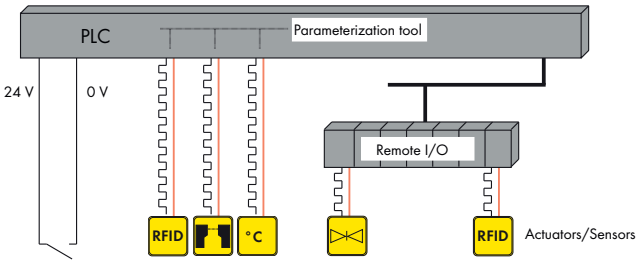

IO-Link simplifies use sensor and actuator functionalities via:
- standardized IO Device Description (IODD) files,
- device profiles,
- communication.
Combined with customized tooling, this makes different cable types and time-consuming control system integration.

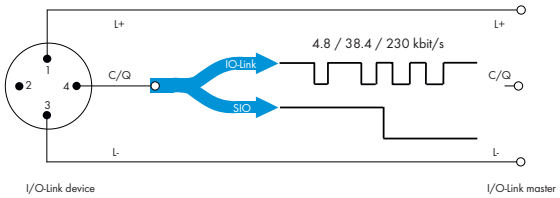

IO-Link features:
1. Cyclic process data:
   1-bit to maximum 32-byte input and output data
2. Point-to-point connection
3. Acyclic data:
   Addressing via index (0...32k) and subindex (0...255)
4. Events (errors, warnings and messages; 2-byte code)

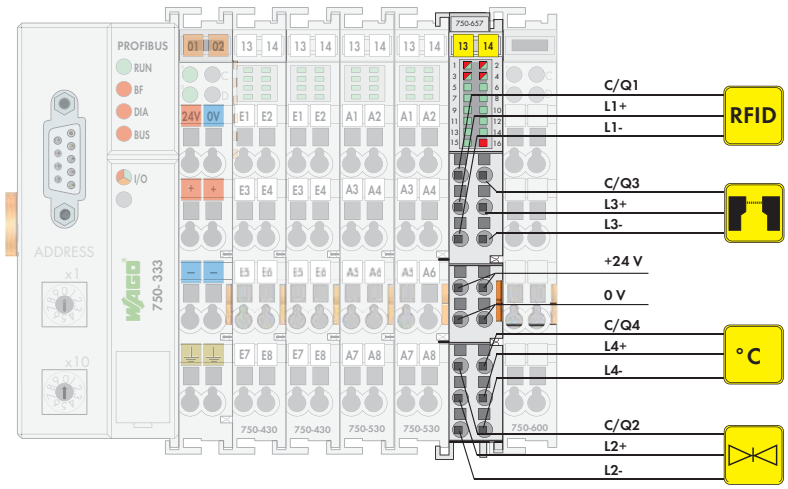

Four different IO-Link devices, or even digital standard sensors/actuators, can connect to the WAGO 750-657 IO-Link Master simultaneously. The module has 3 connections for each of the 4 channels although it is just 12mm (0.47in) wide. This provides cost-effective and convenient connection of sensors and actuators, by eliminating extensive wiring and time-consuming integration.

4-Channel IO-Link Master

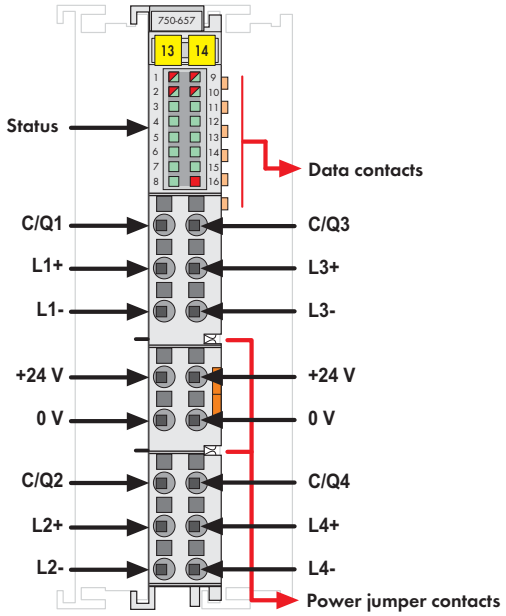

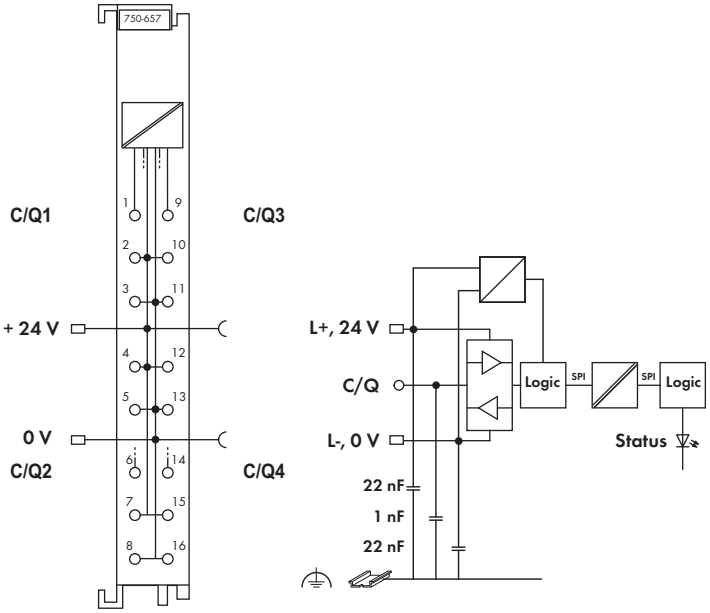

Delivered without miniature WSB markers

Increasingly complex products, manufacturing flexibility and high demands on quality assurance require intelligent, configurable and programmable sensors. To fulfill these demands, IO-Link streamlines the varying interfaces required to connect to a control system and tooling.
A 3-wire connection can communicate process data (as single bits, bytes and data blocks for input and output data). It also communicates acyclic data (for identification, configuration, parameterization and diagnostics) with up to 230.4 kbaud to both sensors and actuators.
The functions and performance data are defined in device description files for master and devices; these are easy to customize via WAGO-I/O-CHECK.
If a device must be replaced, the configuration and parameterization can be automatically restored without maintenance personnel.

Project design, installation and operation are simplified!
Four different IO-Link devices or standard digital sensors/actuators can simultaneously connect to the WAGO 750-657 IO-Link Master.
At just 12mm wide, the module has 3 connections for each of the 4 channels.

Description	Item No.	Pack. Unit
4-Channel IO-Link Master	**750-657**	1

Accessories		Item No.	Pack. Unit
WAGO-I/O-CHECK, RS-232 kit		**759-302**	1
GSD files		Download: www.wago.com	
Miniature WSB Quick marking system			
	plain	**248-501**	5
	with marking	see Section 11	

Approvals

Conformity marking	CE
Korea Certification	
UL 508	
ANSI/ISA 12.12.01	Class I, Div. 2, Grp. ABCD, T4

Technical Data

Number of IO-Link ports	4
Power supply	5 V system voltage via internal data bus,
	24 V via power jumper contacts
Voltage via power jumper contacts	24 V DC (20.4 V ... 28.8 V;
	-15% ... +20%)
Current consumption typ. (24 V)	50 mA
Current consumption typ. (KBUS)	40 mA
Connection type	Physics 2 (3-wire)
Transmission modes	4.8 kbaud (COM 1),
	38.4 kbaud (COM 2),
	230.4 kbaud (COM 3)
Line length (max.)	20 m
Internal bit width	4-24 bytes, configurable
Wire connection	Push-in CAGE CLAMP®
Cross sections	solid:
	0.25 mm² ... 1.5 mm² / AWG 22 ... 14
	fine-stranded:
	0.08 mm² ... 1.5 mm² / AWG 28 ... 14
Strip lengths	8 ... 9 mm / 0.33 in
Width	12 mm
Weight	50.5 g
EMC immunity of interference	acc. to EN 61000-6-1, EN 61000-6-2
EMC emission of interference	acc. to EN 61000-6-3, EN 61000-6-4

CAN Gateway

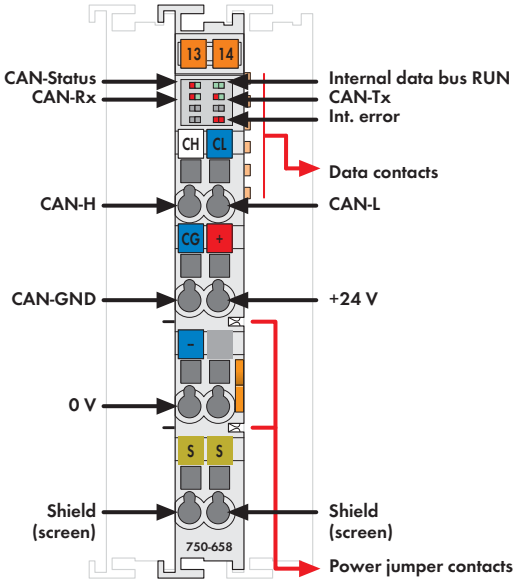

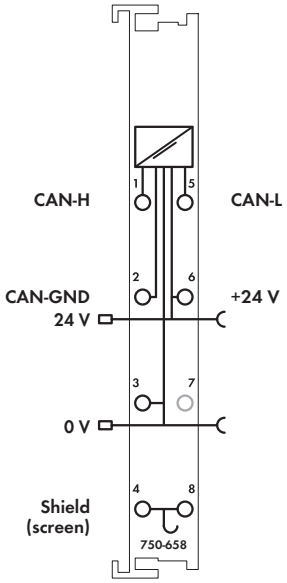

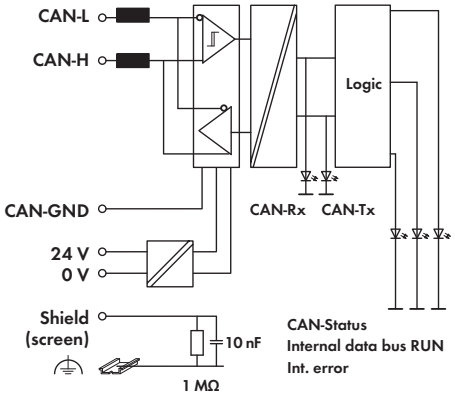

The CAN Gateway supports CAN Layer 2, while meeting CAN specifications 2.0A (11-bit identifier) and 2.0B (29-bit identifier). Function blocks allow the gateway to read and write higher-protocol telegrams (e.g., CANopen).

The gateway adjusts itself to baud rates between 10 kbit/s to 1 Mbit/s via automatic bit-rate detection (Auto Baud Rate). It is also possible to set a fixed transmission rate. Six configurable filters for input telegrams allow CAN messages to be filtered via the CAN identifiers.

Three operation modes are available: Sniffer mode provides a detailed CAN bus analysis without interactions. In transparent mode, the gateway works as an active CAN device that can send and receive any type of CAN telegrams. Mapped mode enables CAN telegrams to be generated directly from the process image. It also allows select process values to be copied from received telegrams into the input process image. A CAN telegram may be sent cyclically, manually or event-triggered (change of process value).

Description	Item No.	Pack. Unit
CAN Gateway	**750-658**	1

Accessories		Item No.	Pack. Unit
Miniature WSB Quick marking system			
	plain	**248-501**	5
	with marking	see Section 11	

Approvals

Conformity marking	CE
Marine applications	BV, GL
cULus UL 508	
cULus ANSI/ISA 12.12.01	Class I, Div. 2, Grp. ABCD, T4

Technical Data

Number of inputs	1 (CAN interface)
Supported baud rates	10 kbit/s, 20 kbit/s, 50 kbit/s, 125 kbit/s, 250 kbit/s, 500 kbit/s, 800 kbit/s, 1 Mbit/s, Auto Baud Rate
CAN data formats	acc. to 2.0A (Standard: 11-bit ID), acc. to 2.0B (Extended: 29-bit ID)
Operation modes	Sniffer mode, transparent mode, mapped mode
Internal bit width	8, 12, 16, 20, 24, 32, 40, 48 bytes configurable; incl. control/status byte
Isolation (peak value)	V_M = 500 V system/supply
Current consumption typ. (24 V)	12 mA
Current consumption typ. (KBUS)	50 mA
Wire connection	CAGE CLAMP®
Cross sections	0.08 mm² ... 2.5 mm² / AWG 28 ... 14
Strip lengths	8 ... 9 mm / 0.33 in
Width	12 mm
Weight	88.7 g
EMC immunity of interference	acc. to EN 61000-6-2, EN 61131-2, marine applications
EMC emission of interference	acc. to EN 61000-6-3, EN 61131-2, marine applications

Data Exchange Module

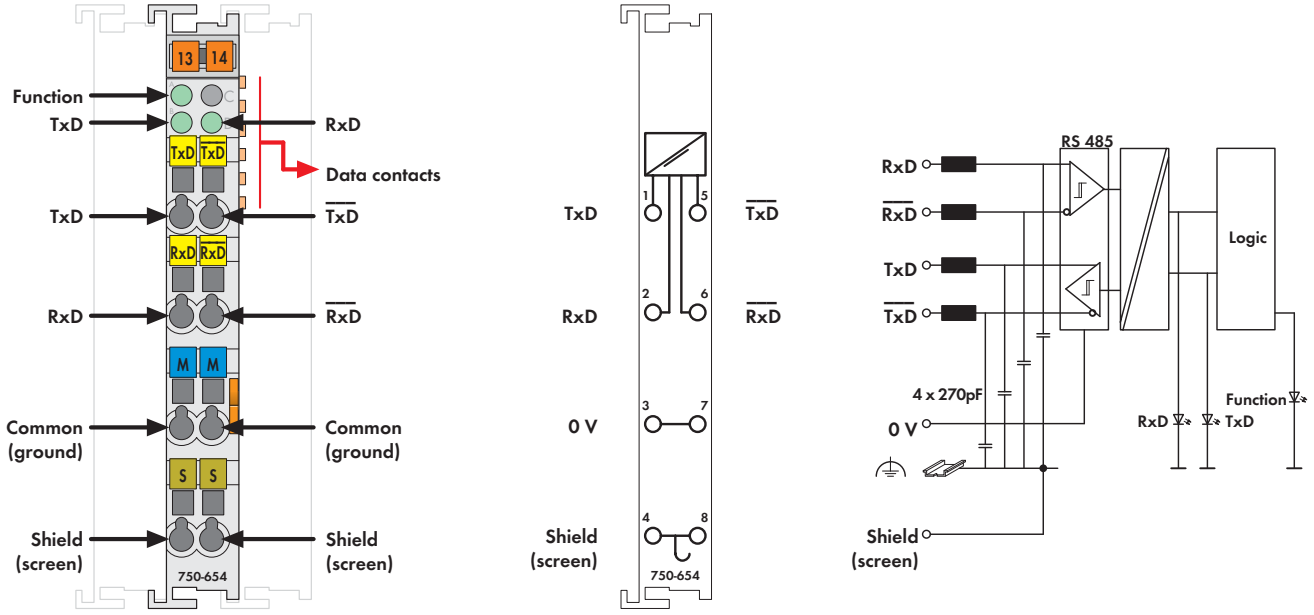

Delivered without miniature WSB markers

The data exchange module allows the exchange of data between different fieldbus systems.

Two modules are a communication pair that is connected by means of two twisted wire pairs. Each module is part of a fieldbus node.

The data exchange is done in full duplex operation, independent of the fieldbus system used. The data of the output process image of the fieldbus coupler is transmitted to the communication partner. This module then transmits the data to the input process image of its fieldbus coupler and vice versa.

Factory preset transmission is 32 bits of input data and 32 bits of output data. Data transfer time for 32 bits of I/O is about 5ms.

The LED "function" indicates a data exchange with the buscoupler. The status of the data transmission is indicated by the TxD and RxD LEDs.

Description	Item No.	Pack. Unit
Data Exchange Module	**750-654**	1

Accessories		Item No.	Pack. Unit
Miniature WSB Quick marking system			
	plain	**248-501**	5
	with marking	see Section 11	

Approvals

Conformity marking	CE
Korea Certification	KC
Marine applications	ABS, BV, DNV, GL, KR, LR, NKK, PRS, RINA
cULus UL 508	
DEKRA 11 ATEX 0203 X	II 3 G Ex nA II T4

Technical Data

Transmission channels	1 TxD / 1 RxD, full duplex
Baud rate	62500 baud (8 N 1)
Bit transfer	via 2 twisted pair with differential signals
Line impedance	120 Ω
Line length	approx. 1000 m twisted pair
Current consumption (internal)	65 mA
Power supply	via system voltage DC/DC
Isolation	500 V system/supply
Internal bit width	1 x 32 bits in/out
	1 x 8 bits control/status
Wire connection	CAGE CLAMP®
Cross sections	0.08 mm² ... 2.5 mm² / AWG 28 ... 14
Strip lengths	8 ... 9 mm / 0.33 in
Width	12 mm
Weight	49.1 g
EMC immunity of interference	acc. to EN 61000-6-2, marine applications
EMC emission of interference	acc. to EN 61000-6-4, marine applications

Functional Safety

Housing Design 750/753 Series	
Dimensions (mm) W x H x L	12 or 24 x 65 x 100 (Height from upper edge of the DIN-rail)
Wire connection	CAGE CLAMP®
Cross sections	0.08 mm² ... 2.5 mm² / 28 ... 14 AWG
Strip lengths	750 Series: 8 ... 9 mm / 0.33 in. 753 Series: 9 ... 10 mm / 0.37 in.

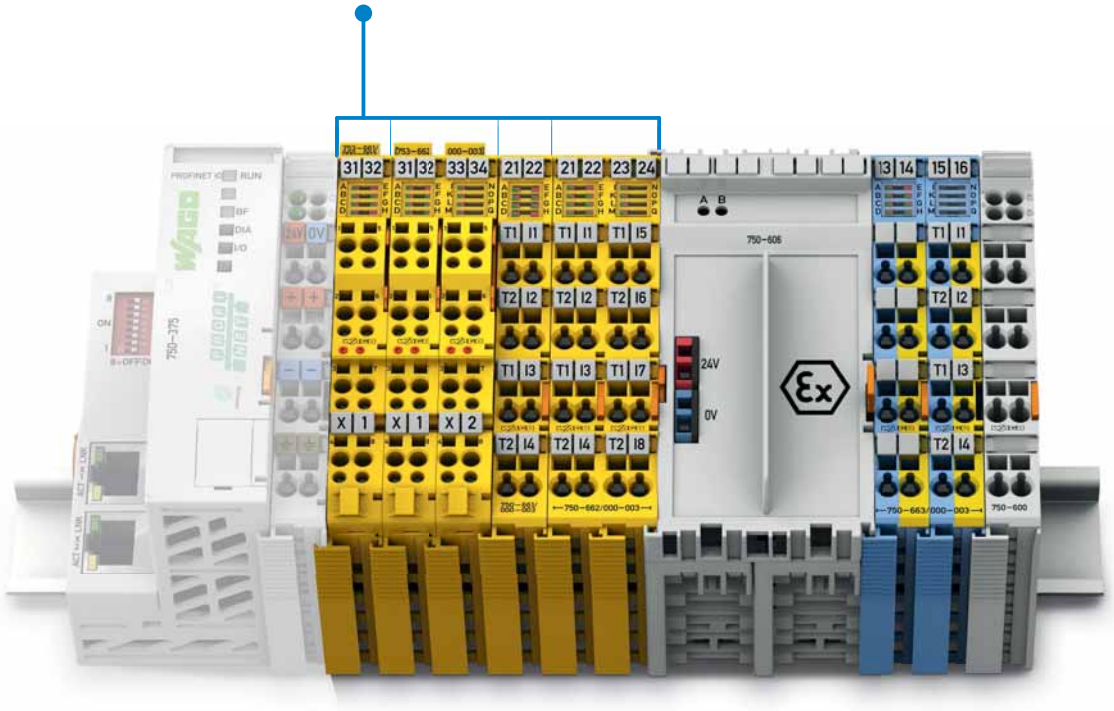

Functional Safety

In the European Union, the machinery directive defines the requirements for machine and system safety. This ensures a uniform standard for the protection of "life and limb" for people within a machine's operating area.

The required risk assessment is based on harmonized standards (e.g., EN 13849) that identifies existing risks and required risk reduction (SIL or PL quality). Based on the risk assessment, safety functionality can be implemented, e.g., by presence detection or protection zone violations using secure switches or light arrays to immediately shutdown the "risk". For this purpose, the safety signals are detected by the "yellow" safety modules and transmitted via "PROFIsafe" to the F-SPS for further processing. The result is then executed via a safe actuator (output module, controller, etc.).

The unique safety characteristic values of the WAGO modules facilitate calculation of the final safety function up to Cat. 4/PLe according to EN 13849, or SIL3 according to EN 62061 or IEC 61511.

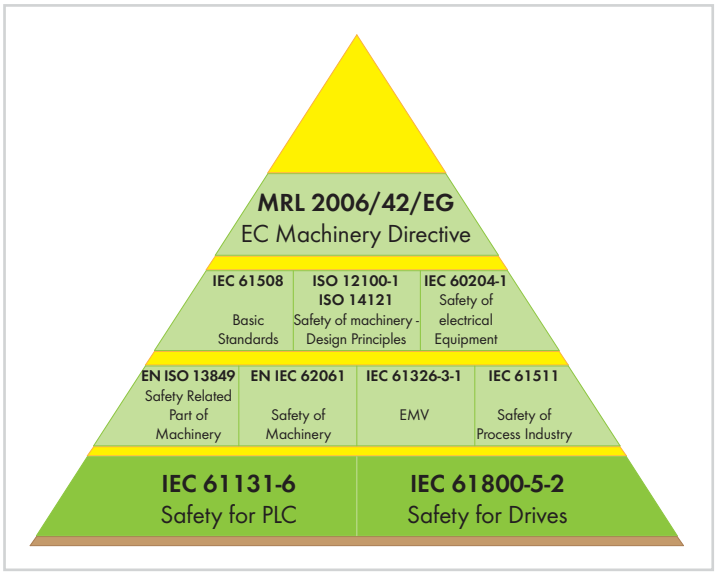

I/O-Systems; Functional Safety

Contents

Function	Description	Item No.		Page
		Standard	Pluggable	
Digital Input Modules PROFIsafe	**PROFIsafe V1.3, 8 FDI 24 V**	750-660/000-001		332
	PROFIsafe V2 iPar, 4 FDI 24 V	750-661/000-003	753-661/000-003	333
	PROFIsafe V2 iPar, 8 FDI 24 V	750-662/000-003	753-662/000-003	334
Digital Input and Output Modules PROFIsafe	**PROFIsafe V1.3, 4 FDO 0,5 A, 4 FDI 24 V**	750-665/000-001		335
	PROFIsafe V2 iPar, 4 FDI/2 FDO 24 V/2 A	750-666/000-003	753-666/000-003	336
	PROFIsafe V2 iPar, 4 FDI/4 FDO 24 V/2 A	750-667/000-003	753-667/000-003	337
Intrinsically Safe, Digital Input Module with Inputs for Functional Safety	**PROFIsafe V2 iPar, 4 F Ex i DI 24V**	750-663/000-003		338
Ex i Supply Modules	The PROFIsafe Input Module (750-663/000-003) shall only be operated using an Ex i 24 VDC power supply (e.g., 750-606, 750-625/000-001)! General information (e.g., installation regulations) on explosion protection is available in the WAGO-I/O-SYSTEM 750 manuals!			
	24 VDC 1.0 A Power Supply Ex i, with diagnostics	750-606		342
	24 VDC 1.0 A Power Supply Ex i	750-625/000-001		342
Filter Modules	The mixed operation of safe and conventional modules streamlines system configuration. For increased EMC immunity required according to the standard, WAGO offers compact filter modules for the power supply (Section 4.10). Specific features of the power supply must be considered, which are described in detail in the corresponding manuals.			
	24 VDC Field Side Power Supply Filter with Overvoltage (Surge) Protection, High Isolation	750-624/020-000		382
	24 VDC Power Supply Filter with Overvoltage (Surge) Protection, High Isolation	750-626/020-000		383

4-Channel Digital Input Safety Module PROFIsafe V2 iPar

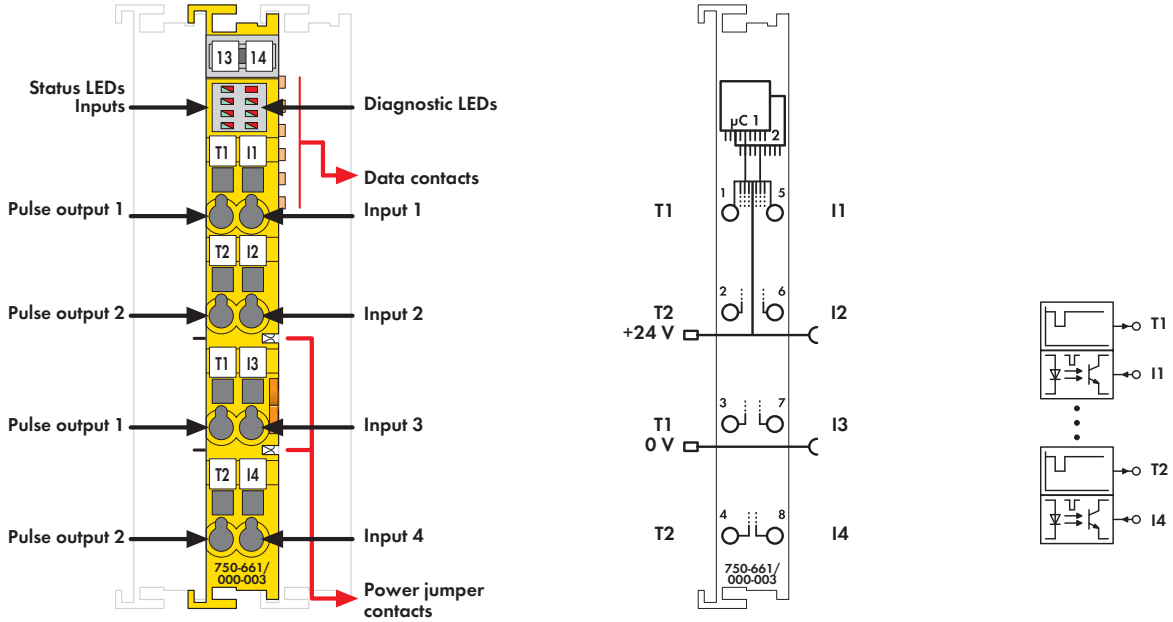

Fig. 750 Series
Delivered without miniature WSB markers

Both 750-661/000-003 and 753-661/000-003 PROFIsafe Input Modules connect potential-free, emergency-off switches with contacts, protection door switches, mode selectors, safety sensors and semiconductor outputs.
The modules have 4 clock-sensitive inputs (I1-I4) fed via 2 differently clocked outputs (T1-T2); clock outputs are short-circuit protected. Inputs are continually monitored for cross circuits and voltage supply from separate sources. Additional safety relevant parameters (e.g., operating modes, switching off test pulses, discrepancy or filter times) can be configured via WAGO-I/O-CHECK.
The configuration tool can be conveniently integrated into engineering systems supporting both CC2 and CC3 tool calling interfaces (TCI).
When exchanging modules, parameters are automatically downloaded into the control unit via PROFIsafe-compatible iPar server – depending on the settings. The PROFIsafe address can be set using the DIP switch located on the side of the module, or via WAGO-I/O-CHECK.
The modules support both PROFIsafe V1 (PROFIBUS) and V2 (PROFIBUS, PROFINET) protocols. An optocoupler provides electrical isolation between the bus and the field side. Individual I/O modules can be arranged in any combination when configuring the fieldbus node.

To protect the module against surge voltages (over-voltage protection acc. to IEC 61000-4-5), the 750-626 filter module or an external surge filter must be used to filter the 24V supply voltage. Reference the product manual for further information (available in German and English).

Description	Item No.	Pack. Unit
4FDI 24V PROFIsafe V2 iPar	**750-661/000-003**	1
4FDI 24V PROFIsafe V2 iPar (without connector)	**753-661/000-003**	1

Accessories		Item No.	Pack. Unit
	753 Series connector	**753-120**	25
	Coding elements	**753-150**	100
	Miniature WSB Quick marking system		
	plain	**248-501**	5
	with marking	see Section 11	

Standards and Approvals

Safety standards	IEC 61508, parts 1-7, Edition 2: 2010;
	EN ISO 13849-1: 2008 + AC: 2009;
	EN 62061
Conformity marking	CE
Korea Certification	
Marine applications	GL
UL 508	
ANSI/ISA 12.12.01	Class I, Div. 2, Grp. ABCD, T4
TÜV 07 ATEX 554086 X	I M2 Ex d I Mb,
	II 3 G Ex nA IIC T4 Gc,
	II 3 D Ex tc IIIC T135°C Dc
IECEx TUN 09.0001 X	Ex d I Mb,
	Ex nA IIC T4 Gc,
	Ex tc IIIC T135°C Dc

Technical Data

Inputs:	
Sensor inputs	I1 ... I4; clock sensitive to T1 ... T2
	Type 1 acc. to IEC61131
Input current (typ.)	2.2 mA
Input frequency (max.)	50 Hz
General specifications:	
Achievable safety classes	SIL 3; Cat. 4, PL e
Voltage supply	5 V system voltage via internal bus
	24 V via power jumper contacts
Voltage via power jumper contacts	24 V DC (20.4 V ... 28.8 V)
Current consumption typ. (internal)	145 mA
Current consumption typ. (field side)	20 mA
Wire connection	CAGE CLAMP®
Cross sections	0.08 mm² ... 2.5 mm² / AWG 28 ... 14
Strip lengths, 750/753 Series	8 ... 9 mm / 0.33 in
	9 ... 10 mm / 0.37 in
Width	12 mm
Weight	52.7 g
EMC immunity of interference	acc. to EN 61000-6-2, marine applications
EMC emission of interference	acc. to EN 61000-6-4, marine applications

8-Channel Digital Input Safety Module PROFIsafe V2 iPar

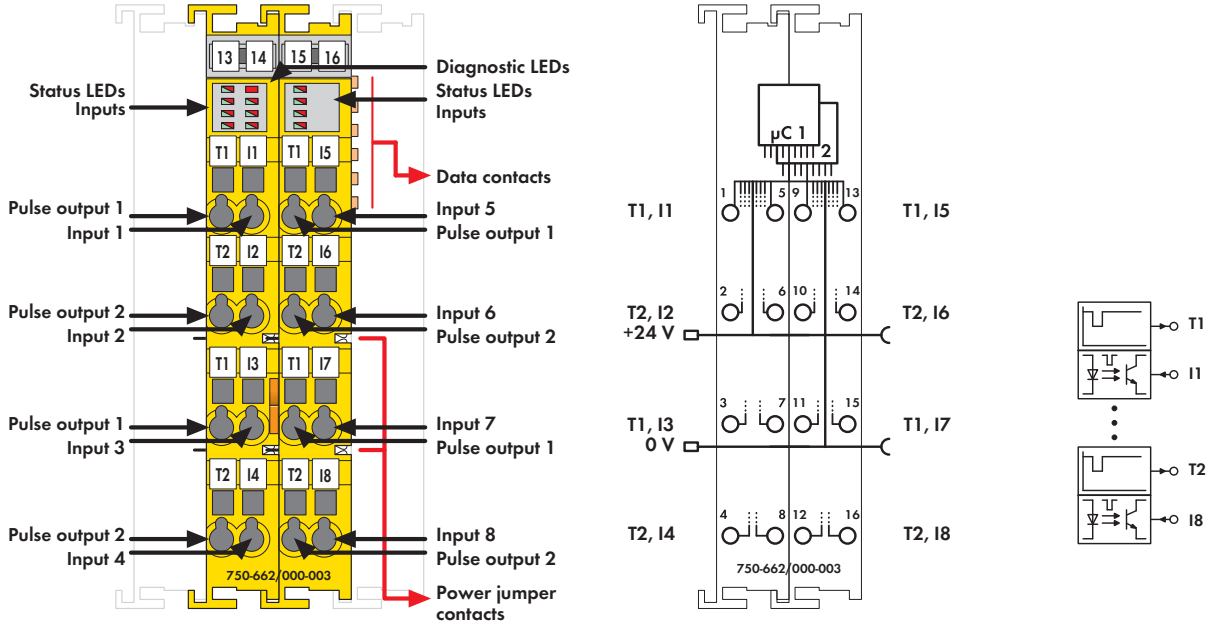

Fig. 750 Series
Delivered without miniature WSB markers

Both 750-662/000-003 and 753-662/000-003 PROFIsafe Input Modules connect potential-free, emergency-off switches with contacts, protection door switches, mode selectors, safety sensors and semiconductor outputs. The module provides 8 clock sensitive inputs (I1-I8) fed via 2 differently clocked outputs (T1-T2); clock outputs are short-circuit protected. Inputs are continually monitored for cross circuits and voltage supply from separate sources.
Additional safety relevant parameters (e.g., operating modes, switching off test pulses, discrepancy or filter times) can be configured via WAGO-I/O-CHECK. The configuration tool can be conveniently integrated into engineering systems supporting both CC2 and CC3 tool calling interfaces (TCI).
When exchanging modules, parameters are automatically downloaded into the control unit via PROFIsafe-compatible iPar – server, depending on settings.

The PROFIsafe address can be set using the DIP switch located on the side of the module, or via WAGO-I/O-CHECK.
The modules support both PROFIsafe V1 (PROFIBUS) and V2 (PROFIBUS, PROFINET) protocols. An optocoupler provides electrical isolation between the bus and the field side. Individual I/O modules can be arranged in any combination when configuring the fieldbus node.

To protect the module against surge voltages (over-voltage protection acc. to IEC 61000-4-5), the 750-626 filter module or an external surge filter must be used to filter the 24V supply voltage. Reference the product manual for further information (available in German and English).

Description	Item No.	Pack. Unit
8FDI 24V PROFIsafe V2 iPar	**750-662/000-003**	1
8FDI 24V PROFIsafe V2 iPar (without connector)	**753-662/000-003**	1

Accessories		Item No.	Pack. Unit
	753 Series connector	**753-120**	25
	Coding elements	**753-150**	100
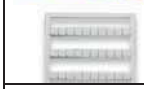	**Miniature WSB Quick marking system**		
	plain	**248-501**	5
	with marking	see Section 11	

Standards and Approvals

Safety standards	IEC 61508, parts 1-7, Edition 2: 2010;
	EN ISO 13849-1: 2008 + AC: 2009;
	EN 62061
Conformity marking	CE
Korea Certification	
Marine applications	GL
cULus UL 508	
cULus ANSI/ISA 12.12.01	Class I, Div. 2, Grp. ABCD, T4
TÜV 07 ATEX 554086 X	I M2 Ex d I Mb,
	II 3 G Ex nA IIC T4 Gc,
	II 3 D Ex tc IIIC T135°C Dc
IECEx TUN 09.0001 X	Ex d I Mb,
	Ex nA IIC T4 Gc,
	Ex tc IIIC T135°C Dc

Technical Data

Inputs:	
Sensor inputs	I1 ... I8; clock sensitive to T1 ... T2
	Type 1 acc. to IEC61131
Input current (typ.)	2.2 mA
Input frequency (max.)	50 Hz
General specifications:	
Achievable safety classes	SIL 3; Cat. 4, PL e
Voltage supply	5 V system voltage via internal bus
	24 V via power jumper contacts
Voltage via power jumper contacts	24 V DC (20.4 V ... 28.8 V)
Current consumption typ. (internal)	148 mA
Current consumption typ. (field side)	20 mA
Wire connection	CAGE CLAMP®
Cross sections	0.08 mm² ... 2.5 mm² / AWG 28 ... 14
Strip lengths, 750/753 Series	8 ... 9 mm / 0.33 in
	9 ... 10 mm / 0.37 in
Width	24 mm
Weight	98 g
EMC immunity of interference	acc. to EN 61000-6-2, marine applications
EMC emission of interference	acc. to EN 61000-6-4, marine applications

8-Channel Digital Input Module PROFIsafe V1.3

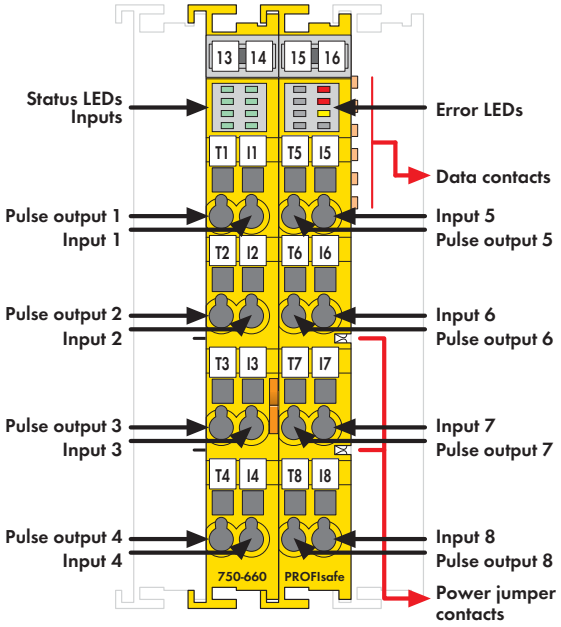

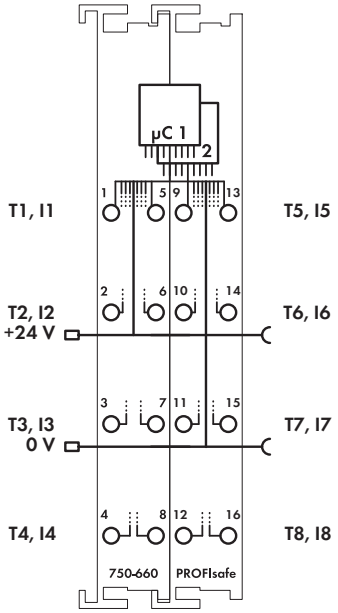

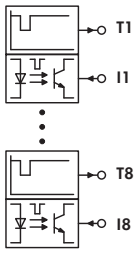

Delivered without miniature WSB markers

Emergency stop buttons, limit sensors, safety interlock switches and other safety sensors with contacts can be operated with the PROFIsafe input module 750-660/000-001.

The modules have 8 clock sensitive inputs (I1 ... I8) that are fed by 8 differently clocked outputs (T1 ... T8).

clock outputs are short-circuit protected. Inputs are continually monitored for cross circuits and voltage supply from separate sources.

The associated LED for each of the 8 input channels indicates the signal state. Two red LEDs also indicate internal or external errors.

The PROFIsafe address can be set using the code switch located on the side.

An optocoupler provides electrical isolation between the bus and the field side.

Individual I/O modules can be arranged in any combination when configuring the fieldbus node. An arrangement in groups is not necessary.

Reference the product manual for further information.

When implementing new installations, please consider PROFIsafe V2 iPar 750-662/000-003 8-Channel Digital Input Safety Module.

Description	Item No.	Pack. Unit
8FDI 24V DC PROFIsafe V1.3	**750-660/000-001**	1

Accessories		Item No.	Pack. Unit
Miniature WSB Quick marking system			
	plain	**248-501**	5
	with marking	see Section 11	

Standards and Approvals

Basic standard safety applications	IEC 61508, parts 1-7, 1998 und 2000; EN 954-1 Cat. 4
Conformity marking	CE
Korea Certification	
UL 508	
ANSI/ISA 12.12.01	Class I, Div. 2, Grp. ABCD, T4
TÜV 07 ATEX 554086 X	I M2 Ex d I Mb, II 3 G Ex nA IIC T4 Gc, II 3 D Ex tc IIIC T135°C Dc
IECEx TUN 09.0001 X	Ex d I Mb, Ex nA IIC T4 Gc, Ex tc IIIC T135°C Dc

Technical Data

Inputs	I1 ... I8; pulse inputs
Achievable safety classes	8 x Cat. 2/SIL 2 or 4 x Cat. 4/SIL 3
Outputs	T1 ... T8: 8 pulse outputs, short circuit proof
Voltage via power jumper contacts	24 V DC (-15 % ... +20 %)
Current via power jumper contacts (max.)	10 A DC
Response times (min ... max)	t_{on} (H->L) = 13 ms ... 71 ms
	t_{off} (H->L) = 13 ms ... 26 ms
	plus 2 x runtime internal bus
	plus 2 x runtime coupler - PLC
	plus runtime PLC
Proof test interval	10 years
Wire connection	CAGE CLAMP®
Cross sections	0.08 mm² ... 2.5 mm² / AWG 28 ... 14
Strip lengths	8 ... 9 mm / 0.33 in
Width	24 mm
Weight	98.3 g
EMC immunity of interference	acc. to EN 61000-6-2
EMC emission of interference	acc. to EN 61000-6-4

4-Channel Digital Input and 4-Channel Digital Output Safety Module PROFIsafe V2 iPar

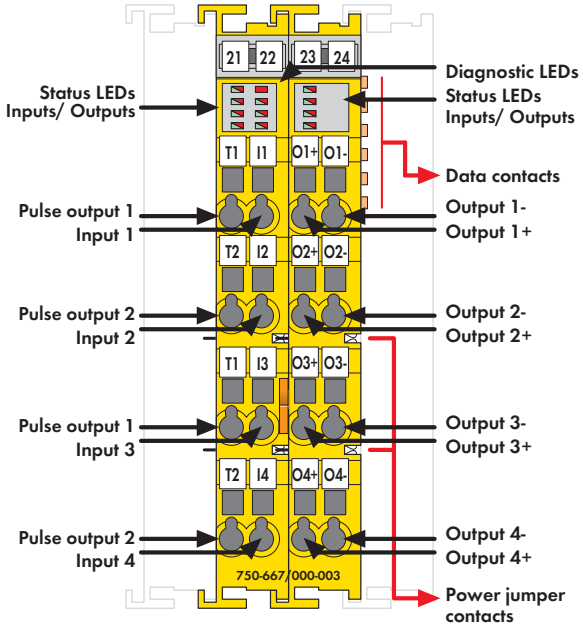

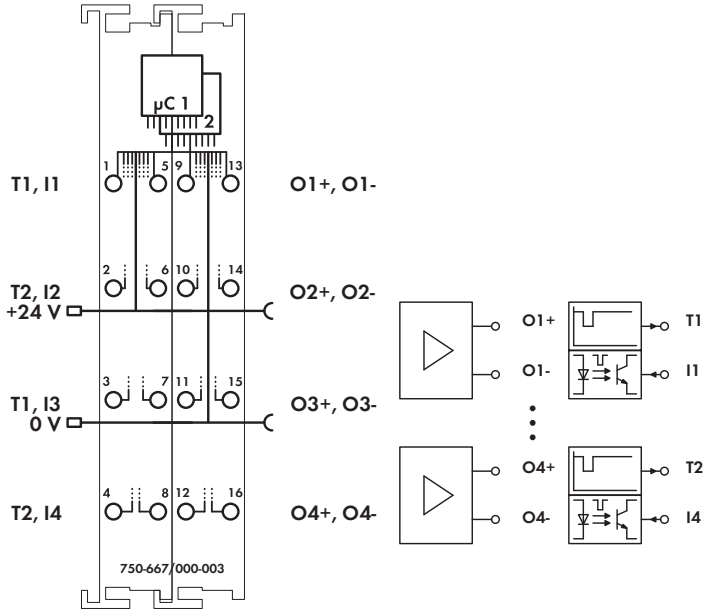

Fig. 750 Series
Delivered without miniature WSB markers

Both 750-667/000-003 and 753-667/000-003 Modules have 4 power outputs (O1-O4), as well as 4 clock-sensitive inputs (I1-I4). The sensors can be supplied directly with 24V or fed by 2 differently clocked outputs (T1-T2).
The inputs connect potential-free, emergency-off switches with contacts, protection door switches, mode selectors, as well as both safety sensors and semiconductor outputs (e.g., light barriers, PLC outputs). The power outputs switch both DC13 resistive and inductive loads with up to a 2A-rated current without requiring any additional external circuit.
The power outputs operate in both bipolar (high-side/low-side switching) and unipolar (common potential on one side of the load) modes.
The modules monitor short-circuits, cross circuits and 24V voltage supply from separate sources. Both the monitoring and additional safety relevant parameters (e.g., operating modes, switching off test pulses, discrepancy or filter times) can be configured via WAGO-I/O-CHECK.

The configuration tool can be conveniently integrated into engineering systems supporting both CC2 and CC3 tool calling interfaces (TCI).
When exchanging modules, parameters are automatically downloaded into the control unit via PROFIsafe-compatible iPar server – depending on settings. The PROFIsafe address can be set using the DIP switch on the side of the module, or via WAGO-I/O-CHECK.
The module supports both the PROFIsafe V1 (PROFIBUS) and V2 (PROFIBUS, PROFINET) protocols.
The individual input modules can be arranged in any combination when configuring the fieldbus node.
To protect the module against surge voltages (over-voltage protection acc. to IEC 61000-4-5), the 750-626 filter module or an external surge filter must be used to filter the 24V supply voltage. Reference the product manual for further information (available in German and English).

Description	Item No.	Pack. Unit
4FDI/4FDO 24V/2A PROFIsafe V2 iPar	**750-667/000-003**	1
4FDI/4FDO 24V/2A PROFIsafe V2 iPar (without connector)	**753-667/000-003**	1

Accessories

	Item No.	Pack. Unit
753 Series connector	**753-120**	25
Coding elements	**753-150**	100
Miniature WSB Quick marking system		
plain	**248-501**	5
with marking	see Section 11	

Standards and Approvals

Safety standards	IEC 61508, parts 1-7, Edition 2: 2010;
	EN ISO 13849-1: 2008 + AC: 2009;
	EN 62061
Conformity marking	CE
Korea Certification	
Marine applications	GL
UL 508	
ANSI/ISA 12.12.01	Class I, Div. 2, Grp. ABCD, T4
TÜV 07 ATEX 554086 X	I M2 Ex d I Mb,
	II 3 G Ex nA IIC T4 Gc,
	II 3 D Ex tc IIIC T135°C Dc
IECEx TUN 09.0001 X	Ex d I Mb,
	Ex nA IIC T4 Gc,
	Ex tc IIIC T135°C Dc

Technical Data

Inputs:	
Sensor inputs	I1 ... I4; clock sensitive to T1 ... T2
	Type 1 acc. to IEC61131
Input current (typ.)	2.2 mA
Input frequency (max.)	50 Hz
Outputs	
Power outputs	O1 ... O4; power outputs for actuators
Output current (per channel)	O1 ... O4: 2 A
Total output current	8 A
Max. switching frequency	Resistive load = 50 Hz;
	Inductive load = 0.1 Hz
Capacitive load for each channel	O1 ... O4; 2.2 µF
Test pulse length	0 ms ... 500 ms
General specifications:	
Achievable safety classes	SIL 3; Cat. 4, PL e
Voltage supply	5 V system voltage via internal bus
	24 V via power jumper contacts
Voltage via power jumper contacts	24 V DC (20.4 V ... 28.8 V)
Current consumption typ. (internal)	180 mA
Current consumption typ. (field side)	20 mA + charge
Wire connection	CAGE CLAMP®
Cross sections	0.08 mm² ... 2.5 mm² / AWG 28 ... 14
Strip lengths, 750/753 Series	8 ... 9 mm / 0.33 in
	9 ... 10 mm / 0.37 in
Width	24 mm
Weight	104.5 g
EMC immunity of interference	acc. to EN 61000-6-2, marine applications
EMC emission of interference	acc. to EN 61000-6-4, marine applications

4-Channel Digital Input and 2-Channel Digital Output Safety Module PROFIsafe V2 iPar

24V/10A semiconductor power output

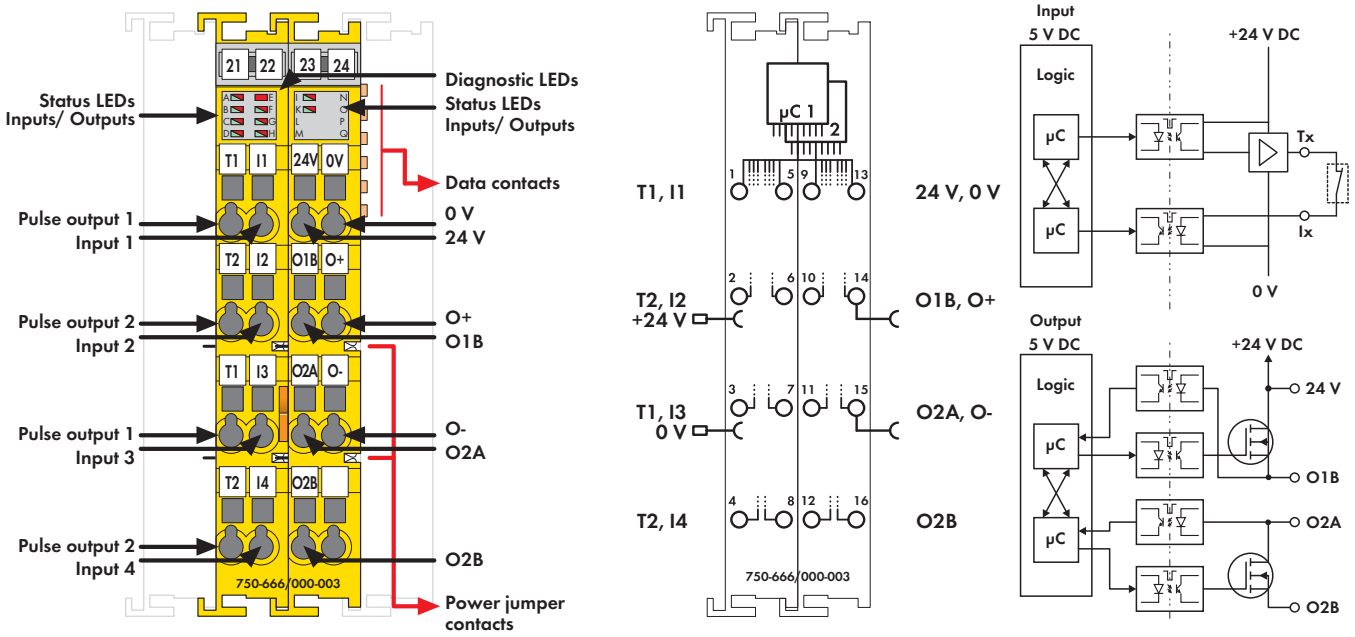

Fig. 750 Series
Delivered without miniature WSB markers

The 75x-666/000-003 module is equipped with 2 power outputs (O1 ... O2) and 4 clock sensitive inputs (I1 ... I4). The sensors can be supplied directly with 24V, or fed by 2 differently clocked outputs (T1 ... T2).
The inputs connect potential-free, emergency-off switches with contacts, protection door switches, mode selectors, as well as both safety sensors and semiconductor outputs (e.g., light barriers, PLC outputs). The power outputs switch both DC13 resistive and inductive loads with up to a 2A-rated current without requiring any additional external circuit.
The power outputs operate in both bipolar (high-side/low-side switching) and unipolar (common potential on one side of the load) modes.
The modules monitor short-circuits, cross circuits and 24V voltage supply from separate sources. Both the monitoring and additional safety relevant parameters (e.g., operating modes, switching off test pulses, discrepancy or filter times) can be configured via WAGO-I/O-CHECK.

The configuration tool can be conveniently integrated into engineering systems supporting both CC2 and CC3 tool calling interfaces (TCI).
When exchanging modules, parameters are automatically downloaded into the control unit via PROFIsafe-compatible iPar server – depending on settings. The PROFIsafe address can be set using the DIP switch on the side of the module, or via WAGO-I/O-CHECK.
The modules support both PROFIsafe V1 (PROFIBUS) and V2 (PROFIBUS, PROFINET) protocols.
Individual input modules can be arranged in any combination when configuring the fieldbus node.
To protect the module against surge voltages (over-voltage protection acc. to IEC 61000-4-5), the filter module 750-626 or an external surge filter must be used the 24V supply voltage. Reference the product manual for further information (available in German and English).

Description	Item No.	Pack. Unit
4FDI/2FDO 24V/10A PROFIsafe V2 iPar; power safety module with transistor output	**750-666/000-003**	1
4FDI/2FDO 24V/10A PROFIsafe V2 iPar; power safety module with transistor output (without connector)	**753-666/000-003**	1

Accessories		Item No.	Pack. Unit
	753 Series connector	**753-120**	25
	Coding elements	**753-150**	100
	Miniature WSB Quick marking system		
	plain	**248-501**	5
	with marking	see Section 11	

Standards and Approvals

Safety standards	IEC 61508, parts 1-7, Edition 2: 2010;
	EN ISO 13849-1: 2008 + AC: 2009;
	EN 62061
Conformity marking	CE
Korea Certification	KC
Marine applications	GL
UL 508	For use with 75°C wire only!
ANSI/ISA 12.12.01	Class I, Div. 2, Grp. ABCD, T4
TÜV 07 ATEX 554086 X	I M2 Ex d I Mb,
	II 3 G Ex nA IIC T4 Gc,
	II 3 D Ex tc IIIC T135°C Dc
IECEx TUN 09.0001 X	Ex d I Mb,
	Ex nA IIC T4 Gc,
	Ex tc IIIC T135°C Dc

Technical Data

Inputs:	
Sensor inputs	I1 ... I4; clock sensitive to T1 ... T2
	Type 1 acc. to IEC61131
Input current (typ.)	2.2 mA
Input frequency (max.)	50 Hz
Outputs	
Power outputs	O1 ... O2; power outputs for actuators
Output current (per channel)	O1 ... O2: 10 A
Total output current	10 A/20 A (Single output operation)
Max. switching frequency	Resistive load = 50 Hz;
	Inductive load = 0.1 Hz
Test pulse length	0 ms ... 500 ms
General specifications:	
Achievable safety classes	SIL 3; Cat. 4, PL e
Voltage supply	5 V system voltage via internal bus
	24 V via power jumper contacts
Voltage via power jumper contacts	24 V DC (20.4 V ... 31.2 V)
Current consumption typ. (internal)	190 mA
Current consumption typ. (field side)	30 mA + charge
Wire connection	CAGE CLAMP®
Cross sections	0.08 mm² ... 2.5 mm² / AWG 28 ... 14
Strip lengths, 750/753 Series	8 ... 9 mm / 0.33 in
	9 ... 10 mm / 0.37 in
Width	24 mm
Weight	95 g
EMC immunity of interference	acc. to EN 61000-6-2, marine applications
EMC emission of interference	acc. to EN 61000-6-4, marine applications

4-Channel Digital Input and 4-Channel Digital Output Module PROFIsafe V1.3

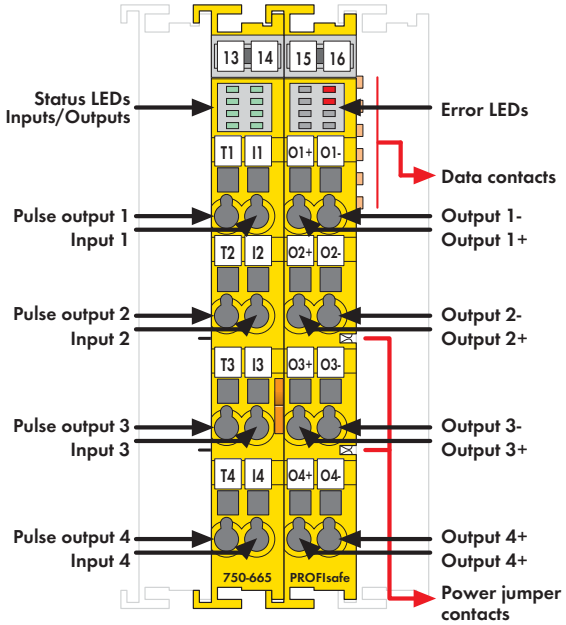

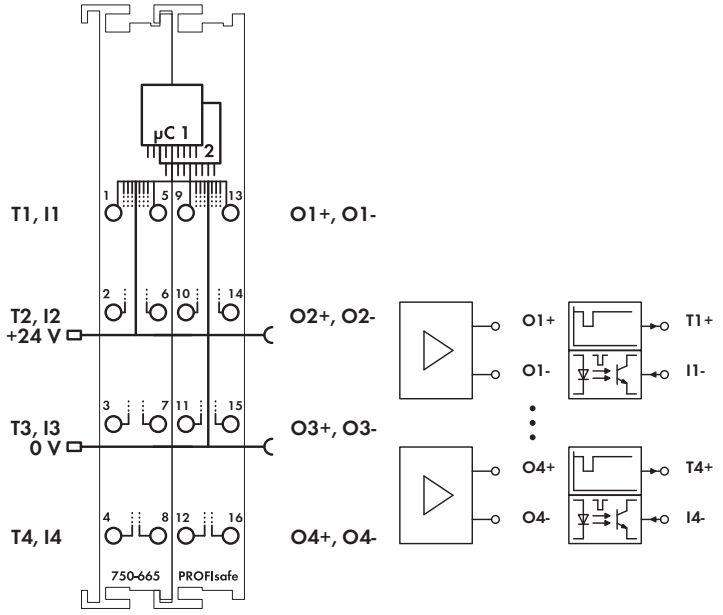

Delivered without miniature WSB markers

The 750-665/000-001 PROFIsafe Input/Output Module has 4 power outputs (O1 ... O4) and 4 clock sensitive inputs (I1 ... I4) that are fed by 4 differently clocked outputs (T1 ... T4).

Clock outputs are short-circuit protected. The inputs and outputs are continually monitored for cross circuits and voltage supply from separate sources.

The associated green LED for each of the 4 input channels and 4 output channels indicates the signal state. Two red LEDs also indicate internal or external errors.

The PROFIsafe address can be set using the code switch located on the side.

An optocoupler provides electrical isolation between the bus and the field side.

Individual input modules can be arranged in any combination when configuring the fieldbus node. An arrangement in groups is not necessary.

Reference the product manual for further information.

When implementing new installations, please consider PROFIsafe V2 iPar 750-667/000-003 4-Channel Digital Input/Output Safety Module.

Description	Item No.	Pack. Unit
4FDO 0.5A, 4FDI 24V DC PROFIsafe V1.3	**750-665/000-001**	1

Accessories		Item No.	Pack. Unit
Miniature WSB Quick marking system			
	plain	**248-501**	5
	with marking	see Section 11	

Standards and Approvals

Basic standard safety applications	IEC 61508, parts 1-7, 1998 und 2000;
	EN 954-1 Cat. 4
Conformity marking	CE
Korea Certification	KC
cULus UL 508	
cULus ANSI/ISA 12.12.01	Class I, Div. 2, Grp. ABCD, T4
TÜV 07 ATEX 554086 X	I M2 Ex d I Mb,
	II 3 G Ex nA IIC T4 Gc,
	II 3 D Ex tc IIIC T135°C Dc
IECEx TUN 09.0001 X	Ex d I Mb,
	Ex nA IIC T4 Gc,
	Ex tc IIIC T135°C Dc

Technical Data

Inputs	I1 ... I4;
	pulse inputs (T1 ... T4)
Achievable safety classes	4 x Cat. 2/SIL 2 or 2 x Cat. 4/SIL 3
Outputs	O1 ... O4: outputs for actuators
Achievable safety classes	4 x Cat. 2/SIL 2 or 2 x Cat. 4/SIL 3
Voltage via power jumper contacts	24 V DC (-15 % ... +20 %)
Current via power jumper contacts (max.)	10 A DC
Current consumption typ. (KBUS)	55 mA
Reactance (max.)	capacitive reactance 2 nF;
	category DC 13
Response times (min ... max) Inputs	t_{on} (H->L) = 13 ms ... 71 ms
	t_{off} (H->L) = 13 ms ... 26 ms
	plus 2 x runtime internal bus
	plus 2 x runtime coupler - PLC
	plus runtime PLC
Response times (max.) Outputs	t_{on} (H->L) = 13 ms
	t_{off} (H->L) = 13 ms
	plus 2 x runtime internal bus
	plus 2 x runtime coupler - PLC
	plus runtime PLC
Swiching frequency $_{max.}$	
resistive load	5 Hz
inductive load acc. to IEC947-5-1, DC13	0.1 Hz, 5 Hz with free-wheeling diodes
Proof test interval	10 years
Wire connection	CAGE CLAMP®
Cross sections	0.08 mm² ... 2.5 mm² / AWG 28 ... 14
Strip lengths	8 ... 9 mm / 0.33 in
Width	24 mm
Weight	98 g
EMC immunity of interference	acc. to EN 61000-6-2
EMC emission of interference	acc. to EN 61000-6-4

Intrinsically Safe, 4-Channel Digital Input Module with Inputs for Functional Safety, PROFIsafe V2 iPar

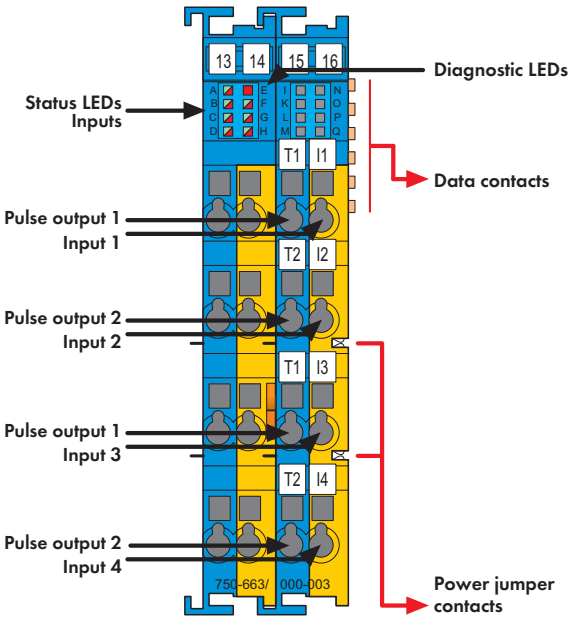

Delivered without miniature WSB markers

The intrinsically safe 750-663/000-003 PROFIsafe input module for functional safety provides risk reductions up to SIL 3, Cat. 4, PL e, and connects to potential-free, contact-based emergency stop switches, safety door switches, mode selectors, as well as safety sensors, that are located hazardous environments 0, 1 and 2. The fail-safe input module must be located in Zone 2. The input module has 4 clock-sensitive inputs (I1 ... I4) that are fed by 2 differently clocked, short-circuit-proof outputs (T1 ... T2). Inputs are continually monitored for cross circuits and power supply from separate sources. Additional safety-relevant functions (e.g., operating modes, switching off test pulses, discrepancy or filter times) can be configured via WAGO-I/O-CHECK. This configuration tool supports both CC2 and CC3 tool calling interfaces (TCI). When exchanging the module, parameters are automatically downloaded by the controller via PROFIsafe-compatible iPar server – depending on settings. The module supports both PROFIsafe V1 and V2 (PROFIBUS, PROFINET) protocols.
Individual I/O modules can be arranged in any combination within the fieldbus node's Ex segment.

Note 1:
The PROFIsafe input module shall only be operated using an Ex i 24 VDC power supply (e.g., 750-606, 750-625/000-001)! General information (e.g., installation regulations) on explosion protection is available in the WAGO-I/O-SYSTEM 750 manuals!

Note 2:
To protect the module against surge voltages (surge protection acc. to IEC 61000-4-5), a filter module (750-626 or 750-624) or an external surge filter must be used upstream of the Ex i 24VDC power supply.
Reference the product manual for further information!

Description	Item No.	Pack. Unit
4F Ex i DI 24V PROFIsafe V2 iPar	**750-663/000-003**	1

Accessories		Item No.	Pack. Unit
Miniature WSB Quick marking system			
	plain	**248-501**	5
	with marking	see Section 11	

Technical Data	
Inputs:	
Sensor inputs	I1 ... I4; clock sensitive to T1 ... T2
	Type 1 acc. to IEC 61131
Input current (typ.)	3 mA
Input frequency (max.)	50 Hz
Input filter	0 ms ... 200 ms, configurable in steps
Clock outputs	T1 ... T2
Output current (max.)	≤ 5 mA
Short-circuit current	≤ 25 mA
General specifications:	
Voltage supply	5 V system voltage via internal bus
Current consumption, system voltage	
typ. (5 VDC)	145 mA
Voltage via power jumper contacts	24 V DC (provided via Ex-i supply
	U_O = max. 27.3 V)
Isolation (peak value)	U_M = 375 V system/supply
Line length (max.)	100 m

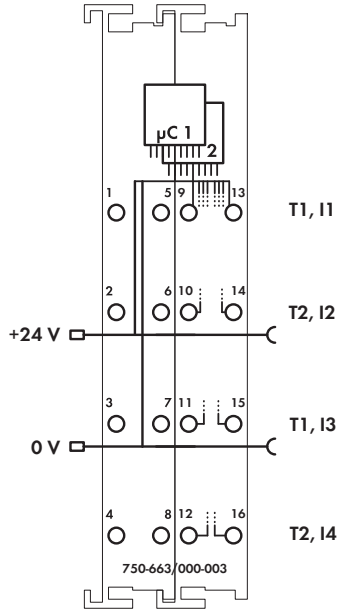

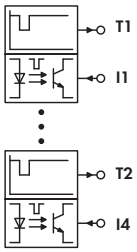

Technical Data

Wire connection	CAGE CLAMP®
Cross sections	0.08 mm² ... 2.5 mm² / AWG 28 ... 14
Strip lengths	8 ... 9 mm / 0.33 in
Width	24 mm
Weight	92 g
EMC immunity of interference	acc. to EN 61000-6-2, marine applications
EMC emission of interference	acc. to EN 61000-6-3, marine applications

Explosion Protection

Electric circuit, safety-relevant data	V_0 = 27.3 V; I_0 = 23 mA; P_0 = 157 mW; Characteristic: Linear
Reactances Ex ia IIC	L_0 = 61 mH; C_0 = 64 nF
Reactances Ex ia IIB	L_0 = 100 mH; C_0 = 552 nF
Reactances Ex ia I	L_0 = 100 mH; C_0 = 2.95 µF
Reactances	(The above-listed ratings do not account for the coincidental occurrence of capacitances and inductances. For ratings taking the coincidental occurrence of capacitances and inductances into account, see manual)

Functional Safety

Achievable risk reduction	SIL 3 acc. to IEC 61508:2010; SIL 3 acc. to IEC 61511:2005; SIL 3 acc. to IEC 62061:2005; Cat. 4, PL e acc. to EN ISO 13849:2008

Standards, Guidelines and Approvals

Safety standards	IEC 61508; IEC 62061; EN ISO 13849; IEC 61511
Conformity marking	CE
ATEX Guideline	EN 60079-0, EN 60079-11, EN 60079-15, EN 60079-26, EN 60079-31
Marine applications	GL
cULus UL 508	
cULus ANSI/ISA 12.12.01	Class I, Div. 2, Grp. ABCD, T4
TÜV 14.1911 X	Ex d [ia Ma] I Mb, Ex nA [ia Ga] IIC T4 Gc, Ex tc [ia Da] IIIC T135 °C Dc
TÜV 12 ATEX 106032 X	I M2 (M1) Ex d [ia Ma] I Mb, II 3 (1) G Ex nA [ia Ga] IIC T4 Gc, II 3 (1) D Ex tc [ia Da] IIIC T135°C Dc
IECEx TUN 12.0039 X	Ex d [ia Ma] I Mb, Ex nA [ia Ga] IIC T4 Gc, Ex tc [ia Da] IIIC T135°C Dc

Intrinsically Safe Modules

Special Housing Design 750 Series	
Dimensions (mm) W x H x L	48 x 65 x 100 (Height from upper edge of the DIN-rail)
Wire connection	CAGE CLAMP®
Cross sections	0.08 mm² ... 1.5 mm² / 28 ... 16 AWG
Strip lengths	8 ... 9 mm / 0.33 in.

Housing Design 750 Series	
Dimensions (mm) W x H x L	12 bzw. 24 x 65 x 100 (Height from upper edge of the DIN-rail)
Wire connection	CAGE CLAMP®
Cross sections	0.08 mm² ... 2.5 mm² / 28 ... 14 AWG
Strip lengths	8 ... 9 mm / 0.33 in.

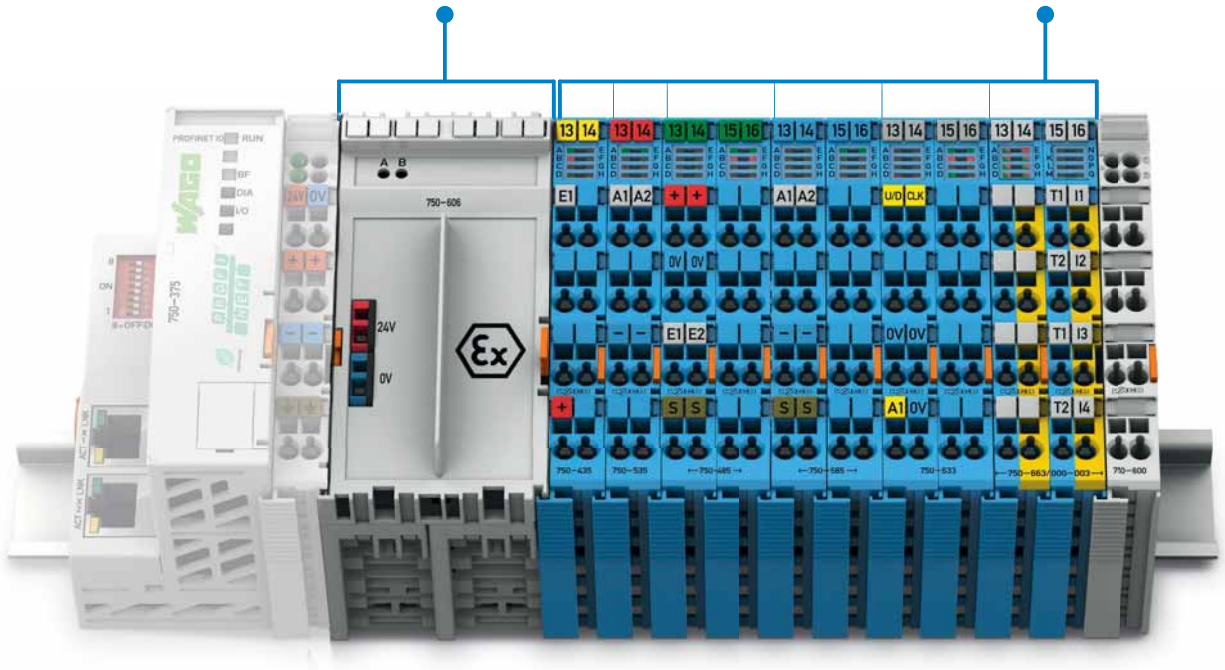

Use in Hazardous Locations

In many plants within the chemical or petrochemical industries, as well as production and process automation, machinery is operated that processes explosive materials including gas and combustible dust. This is why electrical equipment must be explosion-proof in order to avoid injuries to personnel and equipment damage.

The modules within the WAGO-I/O-SYSTEM 750 are designed for use in both non-potentially explosive and potentially explosive areas.

The direct application of fieldbus technology in potentially explosive areas is typically resource-intensive. When used in hazardous areas of Zone 2/22, the WAGO-I/O-SYSTEM 750 offers a safe, easy and economical connection to the sensors and actuators of Zones 0/20 and 1/21. Then WAGO has also developed "blue" Ex-i I/O modules for these intrinsically safe applications, providing users with all the benefits of modern fieldbus technology integrated into a standard node. The WAGO-I/O-SYSTEM 750 is also approved for mining applications.

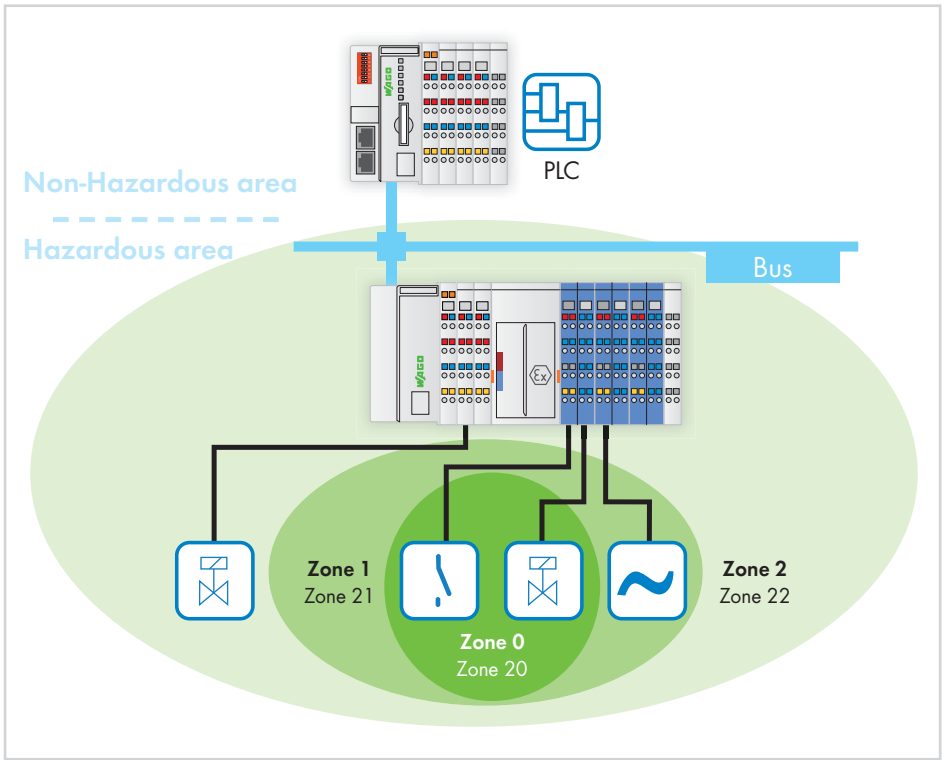

I/O-Systems; Intrinsically Safe Modules
Contents

Function	Description	Item No.	Page
Ex i Supply Modules	**24 V DC 1.0 A Power Supply Ex i, with diagnostics**	750-606	342
	24 V DC 1.0 A Power Supply Ex i	750-625/000-001	342
Ex i Digital Input Modules Proximity switch acc. to DIN EN 60947-5-6	**1 DI NAMUR, Ex i**	750-435	344
	2 DI NAMUR, Ex i	750-438	346
	8 DI NAMUR, Ex i	750-439	348
Intrinsically Safe, Digital Input Module with Inputs for Functional Safety	**PROFIsafe V2 iPar, 4 F Ex i DI 24V**	750-663/000-003	350
Ex i Digital Output Modules	**2 DO Ex i** Short-circuit protected; PNP-positive switching	750-535	352
	2 DO Relay Output Module Ex i 2 changeover contacts, isolated outputs	750-538	354
Ex i Analog Input Modules	**2 AI Ex i** 4–20 mA, single-ended	750-485	356
	2 AI Ex i 4-20 mA, single-ended, HART	750-484	358
	2 AI Ex i RTD	750-481/003-000	360
	2 AI Ex i TC	750-487/003-000	362
Ex i Analog Output Modules	**2 AO Ex i** 0–20 mA	750-585	364
	2 AO Ex i 4–20 mA	750-586	364
Ex i Function Module	**Up/Down Counter, Ex i** NAMUR, 50 kHz	750-633	366

Supply Module 24 V DC, 1.0 A Ex i

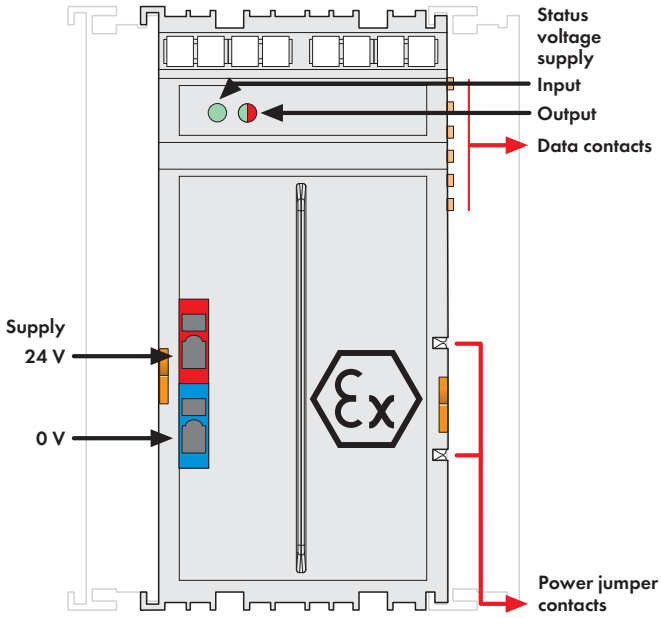

Delivered without miniature WSB markers

This supply module provides power to all intrinsically safe 750 Series Ex i modules. It also monitors power supply to the downstream Ex i segment and separates the intrinsically safe from the non-intrinsically safe section of the WAGO-I/O-SYSTEM 750. Input and output sides are electrically isolated from each other.
The maximum current available from the supply module is 1.0A. When setting up the Ex-i segment, it must be ensured that this total current is not exceeded. In the event of a short circuit or overload, electronic monitoring automatically switches off the output voltage. After eliminating the fault, the output voltage is reactivated within approx. 10 sec.

Notice:
If, due to load conditions, more than one supply module is required per station, four separation modules (750-616) must be placed between the intrinsically safe sections.

LED displays:
- LED green (input voltage)
- LED green/red (output voltage available/not available)

Note:
General information (e.g., installation regulations) on explosion protection is available in the WAGO-I/O-SYSTEM 750 manuals!

Description	Item No.	Pack. Unit
24V DC 1.0A power supply Ex i	**750-606**	1
24V DC 1.0A power supply Ex i (without diagnostics)	**750-625/000-001**	1

Accessories		Item No.	Pack. Unit
Miniature WSB Quick marking system			
	plain	**248-501**	5
	with marking	see Section 11	

Technical Data	
Current consumption, system voltage typ.	
(5 VDC)	7.5 mA
Max. nominal output voltage via power	
jumper contacts	24 VDC
Current via power jumper contacts (max.)	1 ADC
Input voltage	24 VDC (-25% ... +30%)
Power consumption $P_{max.}$	29 W
Power loss P_V	< 5 W
Fuse	electronic
Bit width	750-606:
	2 bits (input voltage failure, fuse triggered)

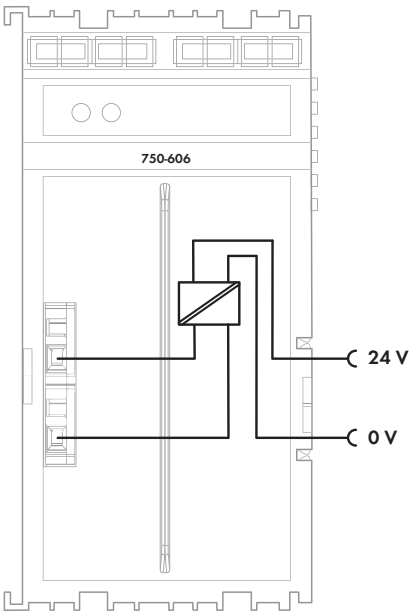

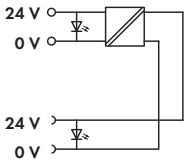

Technical Data

Wire connection	CAGE CLAMP®
Cross sections	0.08 mm² ... 1.5 mm² / AWG 28 ... 14
Strip lengths	5 ... 6 mm / 0.22 in
Width	48 mm
Weight	44 g
EMC immunity of interference	acc. to EN 61000-6-2, marine applications
EMC emission of interference	acc. to EN 61000-6-3, marine applications

Explosion Protection

Power supply, input	U_n = 24 VDC (-25 % ... +30 %);
	P_{max} = 29 W; U_m = 253 V
Power supply, output	U_o = 27.3 V (intrinsically safe output
	voltage acc. to type of protection ia);
	I_n = 1 A

Standards, Guidelines and Approvals

Conformity marking	CE
ATEX Guideline	EN 60079-0, EN 60079-11,
	EN 60079-15, EN 60079-26,
	EN 60079-31
Marine applications	ABS, BV, DNV, GL, KR, LR, NKK, PRS, RINA
cULus UL 508	
cULus ANSI/ISA 12.12.01	Class I, Div. 2, Grp. ABCD, T4
TÜV 14.1911 X	Ex d I Mb,
	Ex nA IIC T4 Gc,
	Ex tc IIIC T135 °C Dc
TÜV 12 ATEX 106032 X	I M2 Ex d I Mb,
	II 3 G Ex nA IIC T4 Gc,
	II 3 D Ex tc IIIC T135°C Dc
IECEx TUN 12.0039 X	Ex d I Mb,
	Ex nA IIC T4 Gc,
	Ex tc IIIC T135°C Dc

1-Channel Digital Input Module NAMUR, Ex i

Proximity switch acc. to DIN EN 60947-5-6

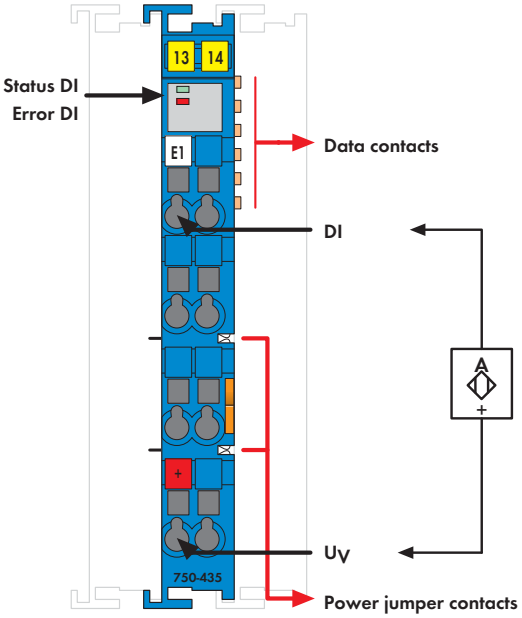

Delivered without miniature WSB markers

The digital input module receives the binary signals from sensors operating in hazardous environments of Zones 0 and 1.
NAMUR sensors, optocouplers, mechanical contacts (in conjunction with resistance coupling module, available as an accessory) or other actuating elements can be connected by means of approved intrinsically safe devices.
The WAGO-I/O-SYSTEM 750 must be installed either in Zone 2 or in a non-hazardous area.
Each sensor is supplied with a short-circuit-protected 8.2 V supply.

LED indicators:
- Green LED (signal on)
- Red LED (short circuit, wire breakage)

Field and system levels are electrically isolated.

Note:
Only use the digital input module in connection with the 24VDC Ex i Supply Module!

General information (e.g., installation regulations) on explosion protection is available in the WAGO-I/O-SYSTEM 750 manuals!

Description	Item No.	Pack. Unit
1DI NAMUR Ex i	**750-435**	1

Accessories		Item No.	Pack. Unit
Resistance coupling module		**288-936**	15
Miniature WSB Quick marking system			
	plain	**248-501**	5
	with marking	see Section 11	

Technical Data	
Number of inputs	1
Current consumption, system voltage typ.	
(5 VDC)	2.5 mA
Voltage via power jumper contacts	24 V DC (provided via Ex-i supply U_O = max. 27.3 V)
Sensor supply U_V	8.2 VDC
Signal current (0)	≤ 1.2 mA
Signal current (1)	≥ 2.1 mA
Input filter	3.0 ms
Switching hysteresis	0.2 mA
Open-circuit voltage	8.2 VDC
Input resistance	1 kΩ
Input pulse duration	≥ 5 ms
Input pulse separation	≥ 3 ms
Short-circuit current	≤ 8.2mA
Short-circuit monitoring	> 6.4mA
Line break monitoring	< 0.2 mA
Current consumption, power jumper	
contact typ. (24 VDC)	13 mA + load
Power consumption $P_{max.}$	0.5 W
Power loss P_V	0.37 W
Isolation	U_M = 375 V system/supply
Bit width	2 bits; (1 bit status, 1 bit error: short circuit/ wire break)

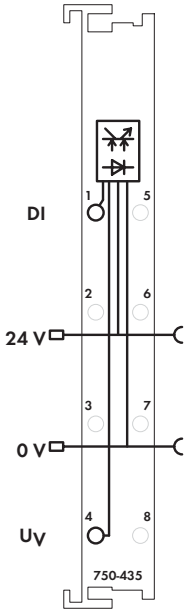

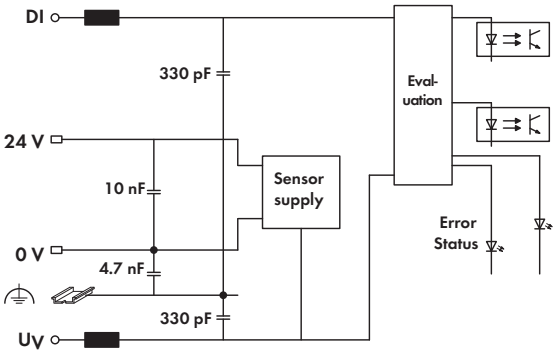

Technical Data

Wire connection	CAGE CLAMP®
Cross sections	0.08 mm² ... 2.5 mm² / AWG 28 ... 14
Strip lengths	8 ... 9 mm / 0.33 in
Width	12 mm
Weight	44.1 g
EMC immunity of interference	acc. to EN 61000-6-2, marine applications
EMC emission of interference	acc. to EN 61000-6-3, marine applications

Explosion Protection

Electric circuit, safety-relevant data	U_o = 12 V ; I_o = 16 mA; P_o = 48 mW; Characteristic: Linear
Reactances Ex ia IIC	L_o = 180 mH; C_o = 1.4 µF
Reactances Ex ia IIB	L_o = 560 mH; C_o = 9 µF
Reactances Ex ia IIA	L_o = 900 mH; C_o = 36 µF
Reactances Ex ia I	L_o = 1 H; C_o = 38 µF
Reactances	(The above-listed ratings do not account for the coincidental occurrence of capacitances and inductances. For ratings taking the coincidental occurrence of capacitances and inductances into account, see manual)

Standards, Guidelines and Approvals

Conformity marking	CE
ATEX Guideline	EN 60079-0, EN 60079-11, EN 60079-15, EN 60079-26, EN 60079-31
Korea Certification	
Marine applications	ABS, BV, DNV, GL, KR, LR, NKK, PRS, RINA
UL 508	
ANSI/ISA 12.12.01	Class I, Div. 2, Grp. ABCD, T4
TÜV 14.1911 X	Ex d [ia Ma] I Mb, Ex nA [ia Ga] IIC T4 Gc, Ex tc [ia Da] IIIC T135 °C Dc
TÜV 12 ATEX 106032 X	I M2 (M1) Ex d [ia Ma] I Mb, II 3 (1) G Ex nA [ia Ga] IIC T4 Gc, II 3 (1) D Ex tc [ia Da] IIIC T135°C Dc
IECEx TUN 12.0039 X	Ex d [ia Ma] I Mb, Ex nA [ia Ga] IIC T4 Gc, Ex tc [ia Da] IIIC T135°C Dc

2-Channel Digital Input Module NAMUR, Ex i

Proximity sensor acc. to DIN EN 60947-5-6

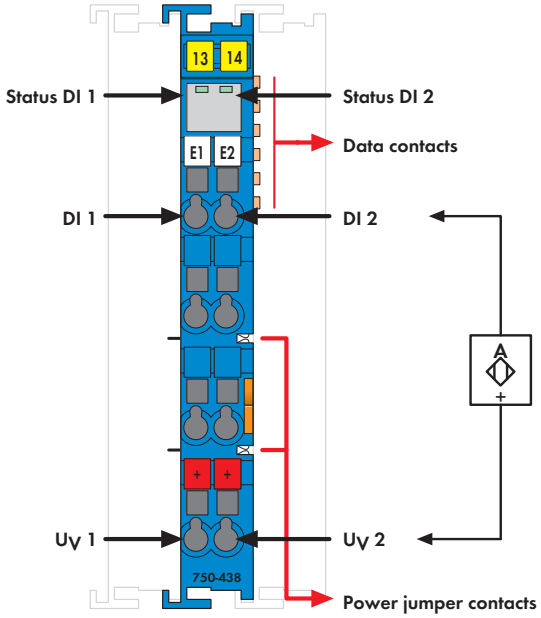

Delivered without miniature WSB markers

The digital input module receives the binary signals from sensors operating in hazardous environments of Zones 0 and 1. NAMUR sensors, optocouplers, mechanical contacts or other actuating elements can be connected by means of approved intrinsically safe devices.
The WAGO-I/O-SYSTEM 750 must be installed either in Zone 2 or in a non-hazardous area. Each sensor is supplied with a short-circuit-protected 8.2V supply.

LED indicators:
- Green LED (signal on)

Field and system levels are electrically isolated.

Note: The digital input module must only be operated via Ex i 24VDC power supply!

General information (e.g., installation regulations) on explosion protection is available in the WAGO-I/O-SYSTEM 750 manuals!

Description	Item No.	Pack. Unit
2DI NAMUR Ex i	**750-438**	1

Accessories		Item No.	Pack. Unit
Miniature WSB Quick marking system			
	plain	**248-501**	5
	with marking	see Section 11	

Technical Data	
Number of inputs	2
Current consumption, system voltage typ.	
(5 VDC)	2.5 mA
Voltage via power jumper contacts	24 V DC (provided via Ex-i supply
	U_O = max. 27.3 V)
Sensor supply U_V	8.2 VDC
Signal current (0)	≤ 1.2 mA
Signal current (1)	≥ 2.1 mA
Input filter	3.0 ms
Switching hysteresis	0.2 mA
Open-circuit voltage	8.2 VDC
Input resistance	1kΩ
Input pulse duration	≥ 5 ms
Input pulse separation	≥ 3 ms
Short-circuit current	≤ 8.2mA
Current consumption, power jumper	
contact typ. (24 VDC)	16 mA + load
Power consumption $P_{max.}$	0.4 W
Power loss P_V	0.27 W
Isolation (peak value)	U_M = 375 V system/supply
Bit width	2 bits (status)

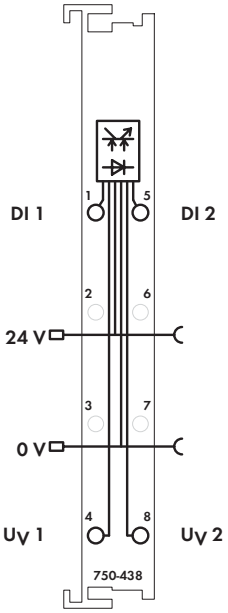

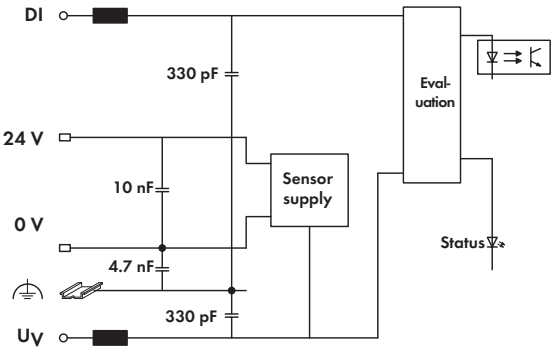

Technical Data

Wire connection	CAGE CLAMP®
Cross sections	0.08 mm² ... 2.5 mm² / AWG 28 ... 14
Strip lengths	8 ... 9 mm / 0.33 in
Width	12 mm
Weight	48.5 g
EMC immunity of interference	acc. to EN 61000-6-2, marine applications
EMC emission of interference	acc. to EN 61000-6-3, marine applications

Explosion Protection

Electric circuit, safety-relevant data	U_o = 12 V ; I_o = 13.5 mA; P_o = 40.5 mW; Characteristic: Linear
Reactances Ex ia IIC	L_o = 190 mH; C_o = 1.4 µF
Reactances Ex ia IIB	L_o = 600 mH; C_o = 9 µF
Reactances Ex ia IIA	L_o = 1 H; C_o = 36 µF
Reactances Ex ia I	L_o = 1 H; C_o = 38 µF
Reactances	(The above-listed ratings do not account for the coincidental occurrence of capacitances and inductances. For ratings taking the coincidental occurrence of capacitances and inductances into account, see manual)

Standards, Guidelines and Approvals

Conformity marking	CE
ATEX Guideline	EN 60079-0, EN 60079-11, EN 60079-15, EN 60079-26, EN 60079-31
Korea Certification	
Marine applications	ABS, BV, DNV, GL, KR, LR, NKK, PRS, RINA
UL 508	
ANSI/ISA 12.12.01	Class I, Div. 2, Grp. ABCD, T4
TÜV 14.1911 X	Ex d [ia Ma] I Mb, Ex nA [ia Ga] IIC T4 Gc, Ex tc [ia Da] IIIC T135 °C Dc
TÜV 12 ATEX 106032 X	I M2 (M1) Ex d [ia Ma] I Mb, II 3 (1) G Ex nA [ia Ga] IIC T4 Gc, II 3 (1) D Ex tc [ia Da] IIIC T135°C Dc
IECEx TUN 12.0039 X	Ex d [ia Ma] I Mb, Ex nA [ia Ga] IIC T4 Gc, Ex tc [ia Da] IIIC T135°C Dc

8-Channel Digital Input Module NAMUR, Ex i

Proximity switch acc. to DIN EN 60947-5-6

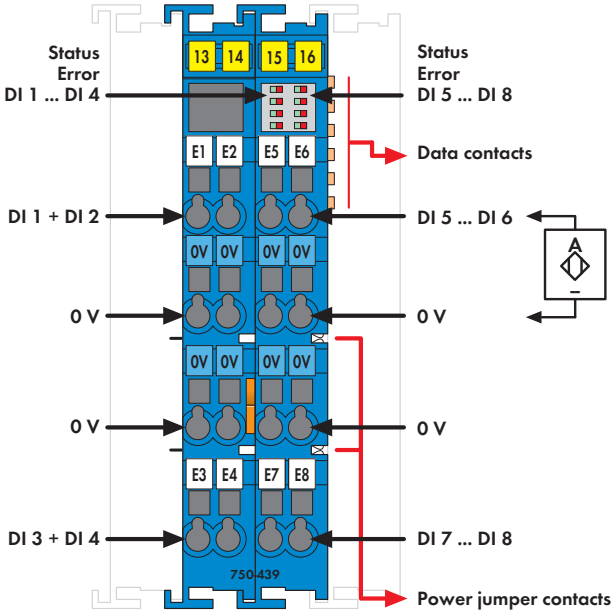

Delivered without miniature WSB markers

The 750-439 Digital Input Module records binary signals from sensors operating in hazardous environments of Zones 0 and 1, permitting channel-by-channel short-circuit and wire-break diagnostics. NAMUR sensors, optocouplers, mechanical contacts (LED diagnostics can be turned off via control byte) or other actuating elements can be connected via intrinsically safe devices.
The WAGO-I/O-SYSTEM 750 must be installed either in Zone 2 or in a non-hazardous area. Each sensor is supplied with a short-circuit-protected voltage of 8.2V.

Field and system levels are electrically isolated.

LED displays:
- Green LED (signal ON)
- Red LED (short-circuit)
- Red flashing LED (wire-break)

Note: The digital input module must only be operated via Ex i 24VDC power supply!

General information (e.g., installation regulations) on explosion protection is available in the WAGO-I/O-SYSTEM 750 manuals!

Description	Item No.	Pack. Unit
8DI NAMUR Ex i	**750-439**	1

Accessories		Item No.	Pack. Unit
Miniature WSB Quick marking system			
	plain	**248-501**	5
	with marking	see Section 11	

Technical Data

Number of inputs	8
Current consumption, system voltage typ.	
(5 VDC)	56 mA
Voltage via power jumper contacts	24 VDC (provided via Ex i power supply U_o = max. 27.3 V)
Sensor supply	U_V = 8.2 V (± 0.2 V)
Signal current (0)	≤ 1.2 mA
Signal current (1)	≥ 2.1 mA
Input filter	3.0 ms
Switching hysteresis	0.2 mA
Open-circuit voltage	8.2 VDC
Input resistance	1 kΩ
Input pulse duration	≥ 5 ms
Input pulse separation	≥ 3 ms
Short-circuit current	≤ 8.2 mA (± 0.2 mA)
Short-circuit monitoring	> 6.4 mA
Line break monitoring	< 0.3 mA
Current consumption, power jumper	
contact typ. (24 VDC)	11 mA + load
Power consumption $P_{max.}$	1.2 W
Power loss P_V	0.54 W
Isolation (peak value)	U_M = 375 V system/supply
Bit width	16 bits (status)

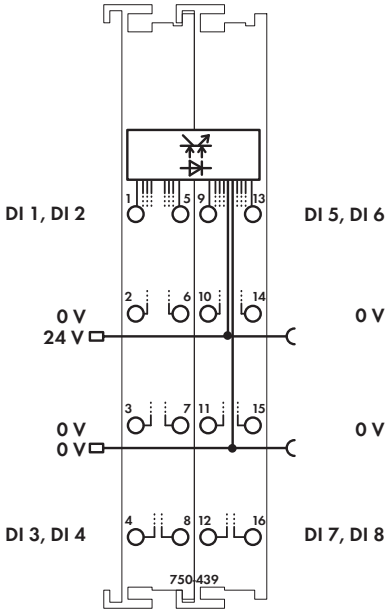

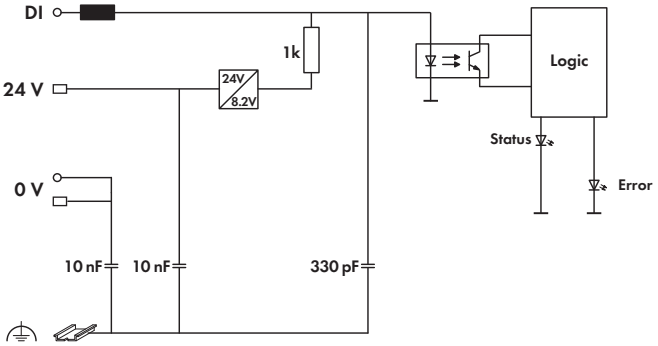

Technical Data

Wire connection	CAGE CLAMP®
Cross sections	0.08 mm² ... 2.5 mm² / AWG 28 ... 14
Strip lengths	8 ... 9 mm / 0.33 in
Width	24 mm
Weight	95.6 g
EMC immunity of interference	acc. to EN 61000-6-2, marine applications
EMC emission of interference	acc. to EN 61000-6-3, marine applications

Explosion Protection

Electric circuit, safety-relevant data	U_o = 11.76 V; I_o = 12.4 mA; P_o = 36.67 mW; Characteristic: Linear
Reactances Ex ia IIC	L_o = 100 mH; C_o = 1 µF
Reactances Ex ia IIB	L_o = 100 mH; C_o = 9.9 µF
Reactances Ex ia I	L_o = 100 mH; C_o = 30 µF
Reactances	(The above-listed ratings do not account for the coincidental occurrence of capacitances and inductances. For ratings taking the coincidental occurrence of capacitances and inductances into account, see manual)

Standards, Guidelines and Approvals

Conformity marking	CE
ATEX Guideline	EN 60079-0, EN 60079-11, EN 60079-15, EN 60079-26, EN 60079-31
Marine applications	GL
cULus UL 508	
cULus ANSI/ISA 12.12.01	Class I, Div. 2, Grp. ABCD, T4
TÜV 14.1911 X	Ex d [ia Ma] I Mb, Ex nA [ia Ga] IIC T4 Gc, Ex tc [ia Da] IIIC T135 °C Dc
TÜV 12 ATEX 106032 X	I M2 (M1) Ex d [ia Ma] I Mb, II 3 (1) G Ex nA [ia Ga] IIC T4 Gc, II 3 (1) D Ex tc [ia Da] IIIC T135°C Dc
IECEx TUN 12.0039 X	Ex d [ia Ma] I Mb, Ex nA [ia Ga] IIC T4 Gc, Ex tc [ia Da] IIIC T135°C Dc

Intrinsically Safe, 4-Channel Digital Input Module with Inputs for Functional Safety, PROFIsafe V2 iPar

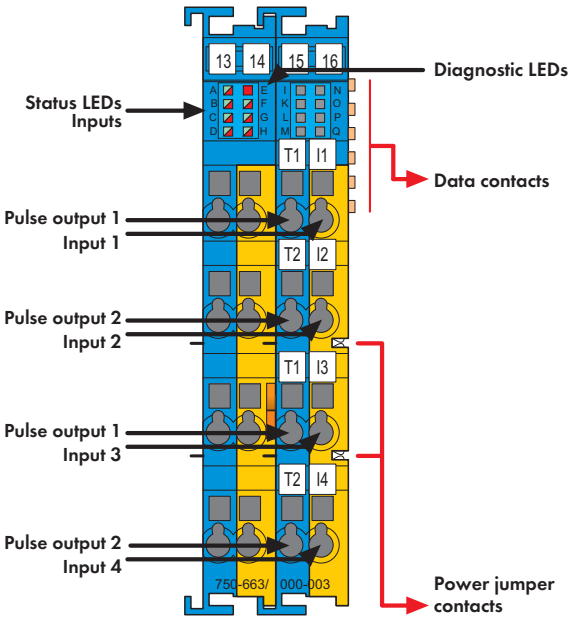

Delivered without miniature WSB markers

The intrinsically safe 750-663/000-003 PROFIsafe input module for functional safety provides risk reductions up to SIL 3, Cat. 4, PL e, and connects to potential-free, contact-based emergency stop switches, safety door switches, mode selectors, as well as safety sensors, that are located hazardous environments 0, 1 and 2.
The fail-safe input module must be located in Zone 2.
The input module has 4 clock-sensitive inputs (I1 ... I4) that are fed by 2 differently clocked, short-circuit-proof outputs (T1 ... T2). Inputs are continually monitored for cross circuits and power supply from separate sources.
Additional safety-relevant functions (e.g., operating modes, switching off test pulses, discrepancy or filter times) can be configured via WAGO-I/O-CHECK.
This configuration tool supports both CC2 and CC3 tool calling interfaces (TCI).
When exchanging the module, parameters are automatically downloaded by the controller via PROFIsafe-compatible iPar server – depending on settings. The module supports both PROFIsafe V1 and V2 (PROFIBUS, PROFINET) protocols.

Individual I/O modules can be arranged in any combination within the fieldbus node's Ex segment.

Note 1:
The PROFIsafe input module shall only be operated using an Ex i 24 VDC power supply (e.g., 750-606, 750-625/000-001)! General information (e.g., installation regulations) on explosion protection is available in the WAGO-I/O-SYSTEM 750 manuals!

Note 2:
To protect the module against surge voltages (surge protection acc. to IEC 61000-4-5), a filter module (750-626 or 750-624) or an external surge filter must be used upstream of the Ex i 24VDC power supply.
Reference the product manual for further information!

Description	Item No.	Pack. Unit
4F Ex i DI 24V PROFIsafe V2 iPar	**750-663/000-003**	1

Accessories		Item No.	Pack. Unit
Miniature WSB Quick marking system			
	plain	**248-501**	5
	with marking	see Section 11	

Technical Data	
Inputs:	
Sensor inputs	I1 ... I4; clock sensitive to T1 ... T2
	Type 1 acc. to IEC 61131
Input current (typ.)	3 mA
Input frequency (max.)	50 Hz
Input filter	0 ms ... 200 ms, configurable in steps
Clock outputs	T1 ... T2
Output current (max.)	≤ 5 mA
Short-circuit current	≤ 25 mA
General specifications:	
Voltage supply	5 V system voltage via internal bus
Current consumption, system voltage	
typ. (5 VDC)	145 mA
Voltage via power jumper contacts	24 V DC (provided via Ex-i supply
	U_O = max. 27.3 V)
Isolation (peak value)	U_M = 375 V system/supply
Line length (max.)	100 m

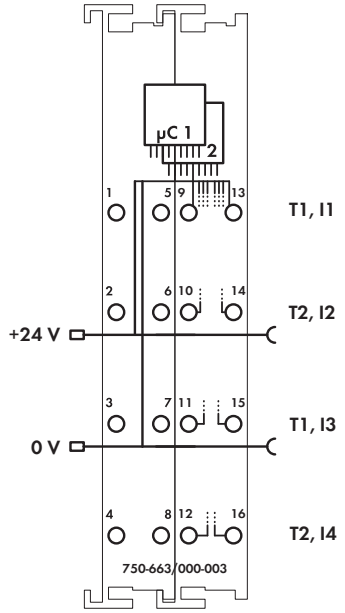

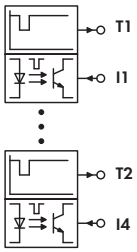

Technical Data

Wire connection	CAGE CLAMP®
Cross sections	0.08 mm² ... 2.5 mm² / AWG 28 ... 14
Strip lengths	8 ... 9 mm / 0.33 in
Width	24 mm
Weight	92 g
EMC immunity of interference	acc. to EN 61000-6-2, marine applications
EMC emission of interference	acc. to EN 61000-6-3, marine applications

Explosion Protection

Electric circuit, safety-relevant data	U_o = 27.3 V; I_o = 23 mA; P_o = 157 mW; Characteristic: Linear
Reactances Ex ia IIC	L_o = 61 mH; C_o = 64 nF
Reactances Ex ia IIB	L_o = 100 mH; C_o = 552 nF
Reactances Ex ia I	L_o = 100 mH; C_o = 2.95 µF
Reactances	(The above-listed ratings do not account for the coincidental occurrence of capacitances and inductances. For ratings taking the coincidental occurrence of capacitances and inductances into account, see manual)

Functional Safety

Achievable risk reduction	SIL 3 acc. to IEC 61508:2010; SIL 3 acc. to IEC 61511:2005; SIL 3 acc. to IEC 62061:2005; Cat. 4, PL e acc. to EN ISO 13849:2008

Standards, Guidelines and Approvals

Safety standards	IEC 61508; IEC 62061; EN ISO 13849; IEC 61511
Conformity marking	CE
ATEX Guideline	EN 60079-0, EN 60079-11, EN 60079-15, EN 60079-26, EN 60079-31
Marine applications	GL
cULus UL 508	
cULus ANSI/ISA 12.12.01	Class I, Div. 2, Grp. ABCD, T4
TÜV 14.1911 X	Ex d [ia Ma] I Mb, Ex nA [ia Ga] IIC T4 Gc, Ex tc [ia Da] IIIC T135 °C Dc
TÜV 12 ATEX 106032 X	I M2 (M1) Ex d [ia Ma] I Mb, II 3 (1) G Ex nA [ia Ga] IIC T4 Gc, II 3 (1) D Ex tc [ia Da] IIIC T135°C Dc
IECEx TUN 12.0039 X	Ex d [ia Ma] I Mb, Ex nA [ia Ga] IIC T4 Gc, Ex tc [ia Da] IIIC T135°C Dc

2-Channel Digital Output Module 24 V DC, Ex i

Short-circuit protected; PNP-positive switching

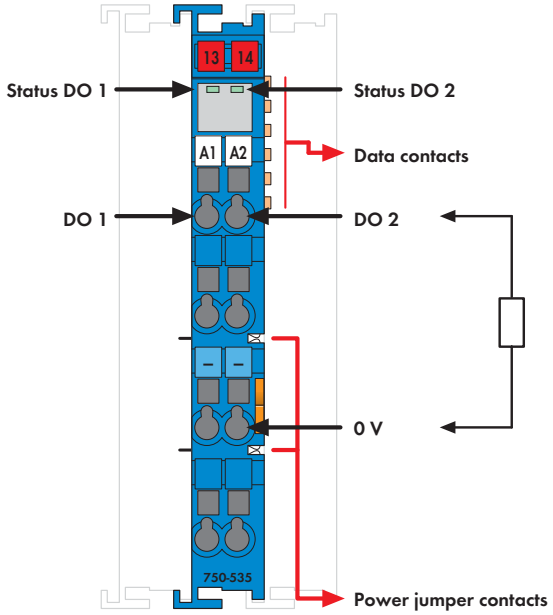

Delivered without miniature WSB markers

The digital output module controls actuators in hazardous Zone 0+1. such as intrinsically safe magnetic valves.
The WAGO-I/O-SYSTEM 750 must be installed either in Zone 2 or in a non-hazardous area.
All outputs are electronically short-circuit-protected.

LED displays:
- Green LED (output status)

Field and system levels are electrically isolated.

Note: The digital output module must only be operated via Ex i 24VDC power supply!

General information (e.g., installation regulations) on explosion protection is available in the WAGO-I/O-SYSTEM 750 manuals!

Description	Item No.	Pack. Unit
2DO 24V DC Ex i	**750-535**	1

Accessories		Item No.	Pack. Unit
Miniature WSB Quick marking system			
	plain	**248-501**	5
	with marking	see Section 11	

Technical Data	
No. of outputs	2
Current consumption, system voltage typ.	
(5 VDC)	7 mA
Voltage via power jumper contacts	24 V DC (provided via Ex-i supply U_O = max. 27.3 V)
Type of load	resistive, inductive, lamps
Max. switching frequency	1 kHz
Output voltage	24 V DC
Internal resistance R_i	285 Ω
Current consumption, power jumper contact typ. (24 VDC)	8,5 mA / module + load
Power consumption $P_{max.}$	2.1 W (with an output current of 40 mA)
Power loss P_V	1.1 W (with an output current of 40 mA)
Isolation	U_M = 375 V system/supply
Bit width	2 bits (status)

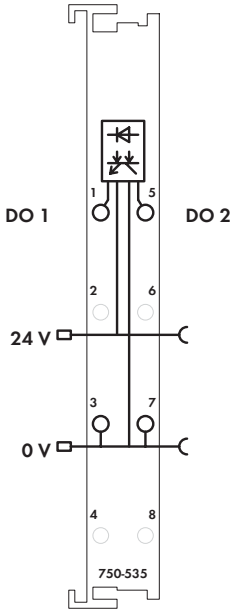

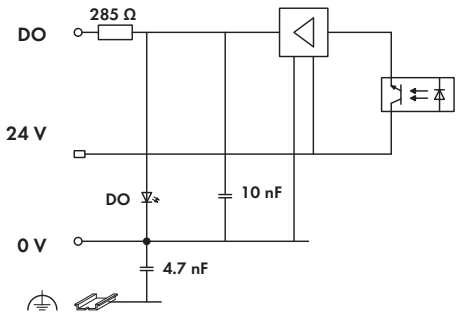

Technical Data

Wire connection	CAGE CLAMP®
Cross sections	0.08 mm² ... 2.5 mm² / AWG 28 ... 14
Strip lengths	8 ... 9 mm / 0.33 in
Width	12 mm
Weight	49.5 g
EMC immunity of interference	acc. to EN 61000-6-2, marine applications
EMC emission of interference	acc. to EN 61000-6-3, marine applications

Explosion Protection

Electric circuit, safety-relevant data	U_o = 27.3 V ; I_o = 106 mA; P_o = 723 mW; Characteristic: Linear
Reactances Ex ia IIC	L_o = 3 mH; C_o = 88 nF
Reactances Ex ia IIB	L_o = 12 mH; C_o = 680 nF
Reactances Ex ia IIA	L_o = 18 mH; C_o = 2.2 µF
Reactances Ex ia I	L_o = 20 mH; C_o = 3.6 µF
Reactances	(The above-listed ratings do not account for the coincidental occurrence of capacitances and inductances. For ratings taking the coincidental occurrence of capacitances and inductances into account, see manual)

Standards, Guidelines and Approvals

Conformity marking	CE
ATEX Guideline	EN 60079-0, EN 60079-11, EN 60079-15, EN 60079-26, EN 60079-31
Korea Certification	
Marine applications	ABS, BV, DNV, GL, KR, LR, NKK, PRS, RINA
cULus UL 508	
cULus ANSI/ISA 12.12.01	Class I, Div. 2, Grp. ABCD, T4
TÜV 14.1911 X	Ex d [ia Ma] I Mb, Ex nA [ia Ga] IIC T4 Gc, Ex tc [ia Da] IIIC T135 °C Dc
TÜV 12 ATEX 106032 X	I M2 (M1) Ex d [ia Ma] I Mb, II 3 (1) G Ex nA [ia Ga] IIC T4 Gc, II 3 (1) D Ex tc [ia Da] IIC T135°C Dc
IECEx TUN 12.0039 X	Ex d [ia Ma] I Mb, Ex nA [ia Ga] IIC T4 Gc, Ex tc [ia Da] IIC T135°C Dc

2-Channel Relay Output Module 100 V AC, 30 V DC, Ex i

Isolated outputs; 2 changeover contacts

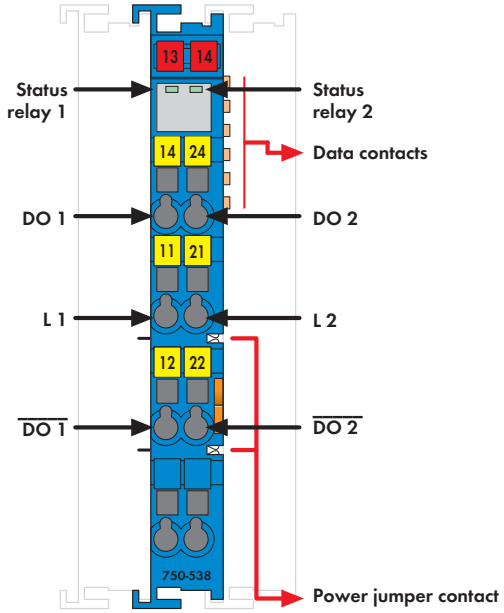

Delivered without miniature WSB markers

The digital output module switches intrinsically safe circuits of Zone 0+1 (e.g., magnetic valves, contactors, optical/acoustic encoders).
The internal system voltage triggers the relay.
Both maximum switching current and voltage must comply with EN 60079-11.
The switched status of the relays is shown by a LED.
The NO contacts are electrically isolated.
The WAGO-I/O-SYSTEM 750 must be installed either in Zone 2 or in a non-hazardous area.

Note: The digital output module must only be operated via Ex i 24VDC power supply!

General information (e.g., installation regulations) on explosion protection is available in the WAGO-I/O-SYSTEM 750 manuals!

Description	Item No.	Pack. Unit
2DO RELAY Ex i	**750-538**	1

Accessories		Item No.	Pack. Unit
Miniature WSB Quick marking system			
	plain	**248-501**	5
	with marking	see Section 11	

Technical Data	
No. of outputs	2 changeover contacts
Current consumption, system voltage typ.	
(5 VDC)	26 mA
Voltage via power jumper contacts	24 V DC (provided via Ex-i supply U_O = max. 27.3 V)
Type of load	resistive, inductive, lamps
Max. switching frequency	20/min
Max. switching voltage	100 V AC / 30 V DC
Max. switching current	0.5 A AC / 1 A DC
Min. switching current	0.01 mA / 10 mV DC
Switching power	50 VA / 30 W
Pull-in time (max.)	4 ms
Drop-out time (max.)	4 ms
Contact material	Silver alloy, gold-plated
Mechanical life (min.)	1 x 10^8 switching operations
Electrical life (min.)	1 x 10^5 (0.5 A / 100 V AC)
	2 x 10^5 (1 A / 30 V DC)
Isolation	V_M = 375 V system/supply
Power consumption $P_{max.}$	0.8 W
Power loss P_V	0.8 W
Bit width	2 bits (status)

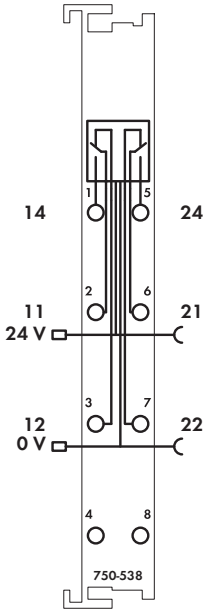

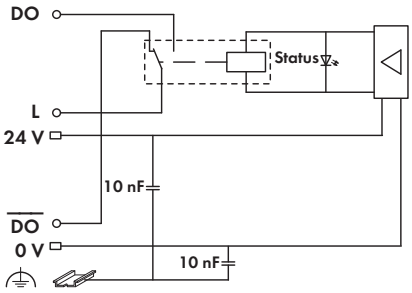

Technical Data

Wire connection	CAGE CLAMP®
Cross sections	0.08 mm² ... 2.5 mm² / AWG 28 ... 14
Strip lengths	8 ... 9 mm / 0.33 in
Width	12 mm
Weight	51 g
EMC immunity of interference	acc. to EN 61000-6-2, marine applications
EMC emission of interference	acc. to EN 61000-6-3, marine applications

Explosion Protection

Electric circuit, safety-relevant data	**Relay output:**
	U_i = 30 V DC; I_i = 1 A; P_i = 30 W;
	U_i = 100 V AC; I_i = 0.5 A; P_i = 50 VA;
	L_i = negligible;
	C_i = negligible
Both maximum switching current and voltage must comply with EN 60079-11	

Standards, Guidelines and Approvals

Conformity marking	CE
ATEX Guideline	EN 60079-0, EN 60079-11,
	EN 60079-15, EN 60079-26,
	EN 60079-31
Marine applications	GL
cULus UL 508	
cULus ANSI/ISA 12.12.01	Class I, Div. 2, Grp. ABCD, T4
TÜV 14.1911 X	Ex d [ia Ma] I Mb,
	Ex nA [ia Ga] IIC T4 Gc,
	Ex tc [ia Da] IIIC T135 °C Dc
TÜV 12 ATEX 106032 X	I M2 (M1) Ex d [ia Ma] I Mb,
	II 3 (1) G Ex nA [ia Ga] IIC T4 Gc,
	II 3 (1) D Ex tc [ia Da] IIIC T135°C Dc
IECEx TUN 12.0039 X	Ex d [ia Ma] I Mb,
	Ex nA [ia Ga] IIC T4 Gc,
	Ex tc [ia Da] IIIC T135°C Dc

2-Channel Analog Input Module 4-20 mA, Ex i

Single-ended (S.E.)

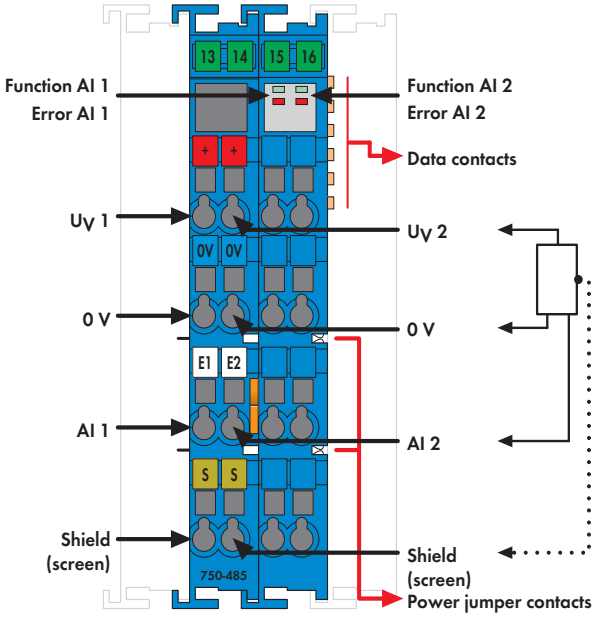

Delivered without miniature WSB markers

The analog input module provides power to the intrinsically safe signal conditioners located in the hazardous Zone 0+1 and processes their analog signals.
The WAGO-I/O-SYSTEM 750 must be installed either in Zone 2 or in a non-hazardous area.
The 24 V supply is derived from the module's power jumper contacts.
The transmitter supply is non-inherently electronically short-circuit-protected.
The shield (screen) is directly connected to the DIN rail.

LED displays:
- Green LED (signal current on/off)
- Red LED (wire breakage, measuring range overflow/underflow)

Field and system levels are electrically isolated.

Note:
Only use the analog input module in connection with the 24VDC Ex i Supply Module!

General information (e.g., installation regulations) on explosion protection is available in the WAGO-I/O-SYSTEM 750 manuals!

Description	Item No.	Pack. Unit
2AI 4-20mA Ex i	**750-485**	1

Accessories		Item No.	Pack. Unit
Miniature WSB Quick marking system			
	plain	**248-501**	5
	with marking	see Section 11	

Technical Data	
Number of inputs	2
Current consumption, system voltage typ.	
(5 VDC)	31 mA
Voltage via power jumper contacts	24 V DC (provided via Ex-i supply U_O = max. 27.3 V)
Transmitter supply	U_V = 16 V at 20 mA
Signal current	4 ... 20 mA
Input resistance	< 100 Ω
Resolution	12 bits
Conversion time	< 2 ms
Measuring error (25 °C)	< ± 0.2 % of the full scale value
Temperature coefficient	< ± 0.01 % / K of the full scale value
Current consumption, power jumper	
contact typ. (24 VDC)	11 mA + load
Power consumption $P_{max.}$	1.3 W
Power loss P_V	0.75 W
Isolation	U_M = 375 V system/supply
Bit width	2 x 16 bits data
	2 x 8 bits control / status (optional)

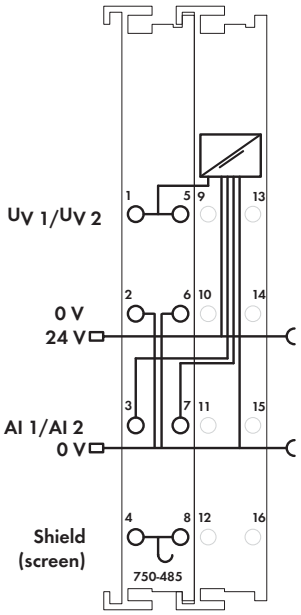

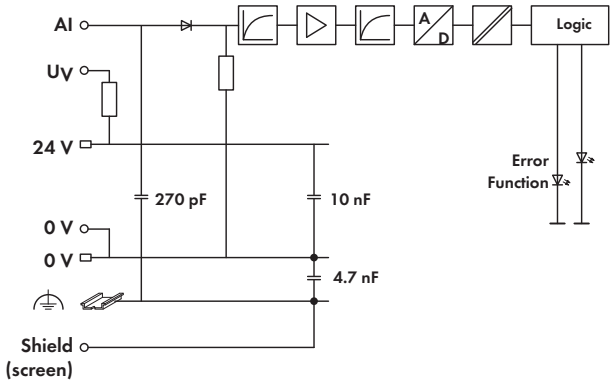

Technical Data

Wire connection	CAGE CLAMP®
Cross sections	0.08 mm² ... 2.5 mm² / AWG 28 ... 14
Strip lengths	8 ... 9 mm / 0.33 in
Width	24 mm
Weight	48.5 g
EMC immunity of interference	acc. to EN 61000-6-2, marine applications
EMC emission of interference	acc. to EN 61000-6-3, marine applications

Explosion Protection

Electric circuit, safety-relevant data	U_o = 27.3 V ; I_o = 90 mA; P_o = 0.61 W; Characteristic: Linear
Reactances Ex ia IIC	L_o = 5 mH; C_o = 88 nF
Reactances Ex ia IIB	L_o = 18 mH; C_o = 680 nF
Reactances Ex ia IIA	L_o = 40 mH; C_o = 2.2 µF
Reactances Ex ia I	L_o = 100 mH; C_o = 3.5 µF
Reactances	(The above-listed ratings do not account for the coincidental occurrence of capacitances and inductances. For ratings taking the coincidental occurrence of capacitances and inductances into account, see manual)

Standards, Guidelines and Approvals

Conformity marking	CE
ATEX Guideline	EN 60079-0, EN 60079-11, EN 60079-15, EN 60079-26, EN 60079-31
Korea Certification	
Marine applications	ABS, BV, DNV, GL, KR, LR, NKK, PRS, RINA
UL 508	
ANSI/ISA 12.12.01	Class I, Div. 2, Grp. ABCD, T4
TÜV 14.1911 X	Ex d [ia Ma] I Mb, Ex nA [ia Ga] IIC T4 Gc, Ex tc [ia Da] IIIC T135 °C Dc
TÜV 12 ATEX 106032 X	I M2 (M1) Ex d [ia Ma] I Mb, II 3 (1) G Ex nA [ia Ga] IIC T4 Gc, II 3 (1) D Ex tc [ia Da] IIIC T135°C Dc
IECEx TUN 12.0039 X	Ex d [ia Ma] I Mb, Ex nA [ia Ga] IIC T4 Gc, Ex tc [ia Da] IIIC T135°C Dc

2-Channel Analog Input Module 4-20 mA HART, Ex i

Single-ended (S.E.)

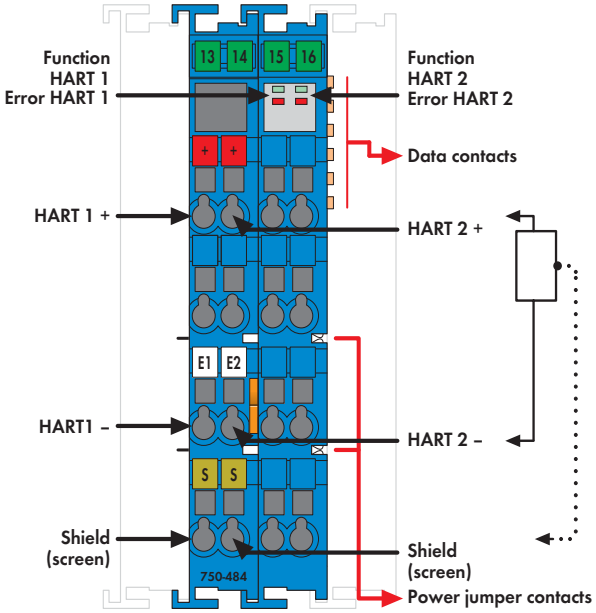

Delivered without miniature WSB markers

The analog input module connects two field-side transformers equipped with a HART interface that are to be used in hazardous environments of Zones 0+1. It supplies the transducers, reads the process values via analog interface and enables HART communication for configuring and importing dynamic variables.
The WAGO-I/O-SYSTEM 750 must be installed either in Zone 2 or in a non-hazardous area.
The 24V supply is derived from the power jumper contacts via multipliers to the field contacts (HART +). The shield (screen) is directly connected to the DIN rail.
The measurement input is equipped with current limitation, which limits the current to a max. 25mA. These modules can supply the voltage for 2-wire transducers without dedicated power supply.

Up to 4 HART dynamic variables (PV, SV, TV, QV) per channel can be mapped in the cyclic process image of the coupler or controller (configurable). For HART communication with connected intelligent HART field devices, the HART protocol can be mapped in the cyclic process image of the coupler or controller (configurable).
FDT/DTM device drivers are available for select (programmable) couplers, allowing HART tool routing to the connected HART device.
Note:
Only use the analog input module in connection with the 24VDC Ex i Supply Module!
General information (e.g., installation regulations) on explosion protection is available in the WAGO-I/O-SYSTEM 750 manuals!

Description	Item No.	Pack. Unit
2AI 4-20 mA S.E. HART Ex i	**750-484**	1

Accessories		Item No.	Pack. Unit
PROFIBUS/HART Gateway DTM		**759-360**	1
MODBUS TCP/HART Gateway DTM		**759-359**	1
Miniature WSB Quick marking system			
	plain	**248-501**	5
	with marking	see Section 11	

Technical Data	
Number of inputs	2
Current consumption, system voltage typ.	
(5 VDC)	25 mA
Voltage via power jumper contacts	24 V DC (provided via Ex-i supply
	U_O = max. 27.3 V)
Transmitter supply	U_V = 16.5 V at 20 mA
Signal current	4 mA ... 20 mA
Overvoltage protection	30 V, reverse polarity protected
Conversion time (typ.)	10 ms
Input filter	parameterizable
Resolution	12 bits
Measuring error (25 °C)	0.2 % of upper range value (non-linearity)
Temperature coefficient	< ± 0.01 % / K of full scale value
Current consumption, power jumper	
contact typ. (24 VDC)	26 mA + load
Power consumption $P_{max.}$	1.60 W (with slaves (20 mA))
Power loss P_V	0.62 W (without slaves)
Isolation	U_M = 375 V system/supply
Bit width	2 x 2 bytes data
	2 x 2 bytes data + 2n x 4 bytes data
	(n = number of dynamic variables)
	2 x 2 bytes data + 6 bytes mailbox
Diagnostics	Wire break, measuring range overrun
HART devices per channel	1 device (single-drop, no multi-drop)
HART modems per channel	1 modem (no multiplex)

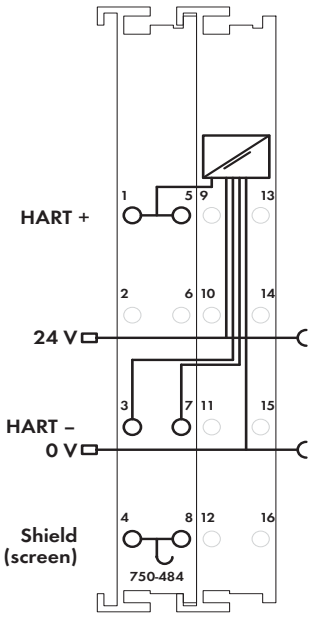

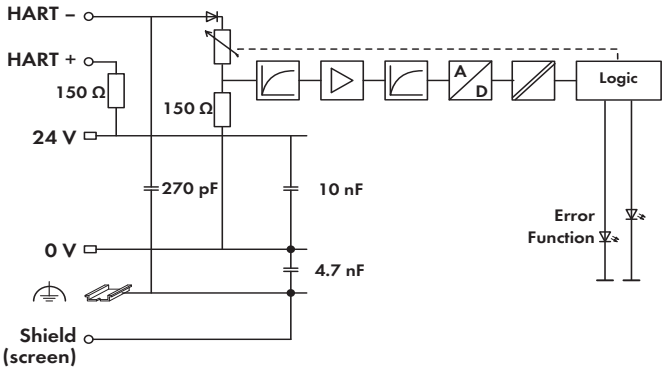

Technical Data

Wire connection	CAGE CLAMP®
Cross sections	0.08 mm² ... 2.5 mm² / AWG 28 ... 14
Strip lengths	8 ... 9 mm / 0.33 in
Width	24 mm
Weight	55 g
EMC immunity of interference	acc. to EN 61000-6-2, marine applications
EMC emission of interference	acc. to EN 61000-6-3, marine applications

Explosion Protection

Electric circuit, safety-relevant data	U_o = 27.3 V; I_o = 92.7 mA; P_o = 630 mW; Characteristic: Linear
Reactances Ex ia IIC	L_o = 1.5 mH; C_o = 87 nF
Reactances Ex ia IIB	L_o = 15 mH; C_o = 670 nF
Reactances Ex ia IIA	L_o = 38 mH; C_o = 2.2 µF
Reactances Ex ia I	L_o = 36 mH; C_o = 3.49 µF
Reactances	(The above-listed ratings do not account for the coincidental occurrence of capacitances and inductances. For ratings taking the coincidental occurrence of capacitances and inductances into account, see manual)

Standards, Guidelines and Approvals

Conformity marking	CE
ATEX Guideline	EN 60079-0, EN 60079-11, EN 60079-15, EN 60079-26, EN 60079-31
Korea Certification	
Marine applications	ABS, BV, DNV, GL, KR, LR, NKK, PRS, RINA
UL 508	
ANSI/ISA 12.12.01	Class I, Div. 2, Grp. ABCD, T4
TÜV 14.1911 X	Ex d [ia Ma] I Mb, Ex nA [ia Ga] IIC T4 Gc, Ex tc [ia Da] IIIC T135 °C Dc
TÜV 12 ATEX 106032 X	I M2 (M1) Ex d [ia Ma] I Mb, II 3 (1) G Ex nA [ia Ga] IIC T4 Gc, II 3 (1) D Ex tc [ia Da] IIIC T135°C Dc
IECEx TUN 12.0039 X	Ex d [ia Ma] I Mb, Ex nA [ia Ga] IIC T4 Gc, Ex tc [ia Da] IIIC T135°C Dc

2-Channel Analog Input Module for Resistance Sensors, Ex i

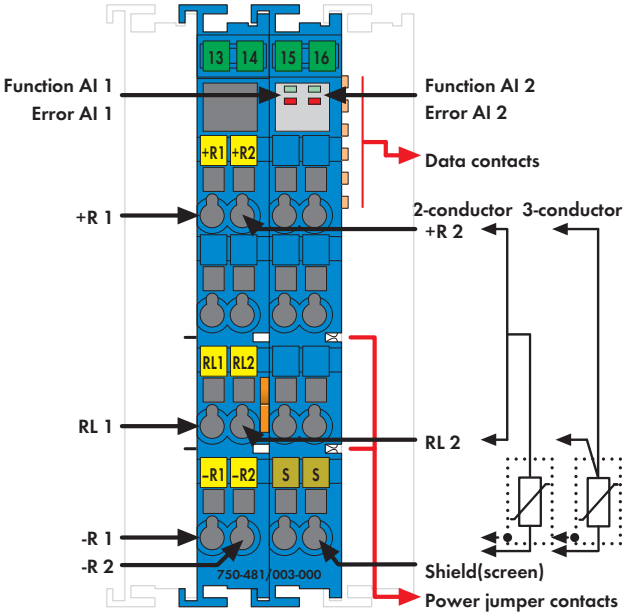

Delivered without miniature WSB markers

The analog input module allows the direct connection of Pt or Ni resistance sensors and potentiometers located in hazardous environments of Zones 0 and 1.
The WAGO-I/O-SYSTEM 750 must be installed either in Zone 2 or in a non-hazardous area. The 24V supply is derived from the module's power jumper contacts.
The shield (screen) is directly connected to the DIN rail.

LED indicators:
- Green LED (availability ON/OFF)
- Red LED (short circuit, wire breakage, measuring range overflow/ underflow)

Field and system levels are electrically isolated.

Note:
Only use the analog input module in connection with the 24VDC Ex i Supply Module!

General information (e.g., installation regulations) on explosion protection is available in the WAGO-I/O-SYSTEM 750 manuals!

Description	Item No.	Pack. Unit
2AI RTD Ex i	**750-481/003-000**	1

Accessories		Item No.	Pack. Unit
Miniature WSB Quick marking system			
	plain	**248-501**	5
	with marking	see Section 11	

Technical Data	
Number of inputs	2
Current consumption, system voltage typ.	
(5 VDC)	25 mA
Voltage via power jumper contacts	24 V DC (provided via Ex-i supply
	U_O = max. 27.3 V)
Conversion time	150 ... 500 ms (per channel)
Measuring error (25 °C)	< ± 0.2 % of the full scale value
Temperature coefficient	< ± 0.01 % / K of the full scale value
Measuring current (typ.)	< 0.5 mA
Types of sensors (version setting made using	WAGO-I/O-*CHECK* software)
RTD	Pt100, Pt200, Pt500, Pt1000,
	Ni100, Ni120, Ni1000
Resistors	1.2 kΩ, 5 kΩ
Potentiometer setting	0 ... 100 % (1.2 kΩ, 5 kΩ)
Sensor connection	2-wire/3-wire
Temperature range	-200 °C ... + 850 °C (Pt);
	-60 °C ... +250 °C (Ni);
	-80 °C ... +320 °C (Ni 120)
Resolution (over entire range)	0.1 °C, 0.1 Ω, 0.0049 %
Current consumption, power jumper	
contact typ. (24 VDC)	12 mA
Power consumption $P_{max.}$	0.45 W
Power loss P_V	0.45 W
Isolation	U_M = 375 V system/supply
Bit width	2 x 16 bits data
	2 x 8 bits control / status (optional)

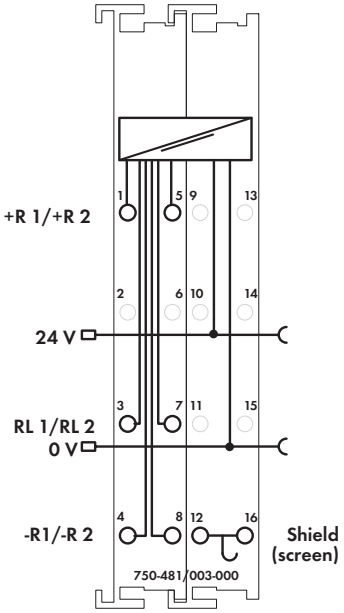

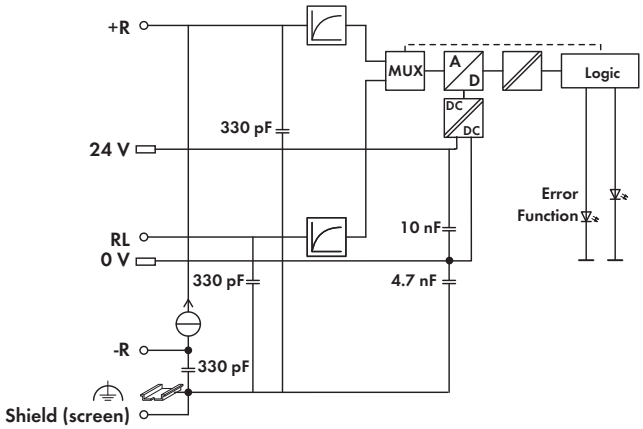

Technical Data

Wire connection	CAGE CLAMP®
Cross sections	0.08 mm² ... 2.5 mm² / AWG 28 ... 14
Strip lengths	8 ... 9 mm / 0.33 in
Width	24 mm
Weight	101.5 g
EMC immunity of interference	acc. to EN 61000-6-2, marine applications
EMC emission of interference	acc. to EN 61000-6-3, marine applications

Explosion Protection

Electric circuit, safety-relevant data	U_o = 7.2 V ; I_o = 5.8 mA; P_o = 10.5 mW; Characteristic: Linear
Reactances Ex ia IIC	L_o = 0.9 H; C_o = 13.5 µF
Reactances Ex ia IIB	L_o = 1 H; C_o = 240 µF
Reactances Ex ia IIA	L_o = 1 H; C_o = 1000 µF
Reactances Ex ia I	L_o = 1 H; C_o = 1000 µF
Reactances	(The above-listed ratings do not account for the coincidental occurrence of capacitances and inductances. For ratings taking the coincidental occurrence of capacitances and inductances into account, see manual)

Standards, Guidelines and Approvals

Conformity marking	CE
ATEX Guideline	EN 60079-0, EN 60079-11, EN 60079-15, EN 60079-26, EN 60079-31
Korea Certification	
Marine applications	ABS, BV, DNV, GL, KR, LR, NKK, PRS, RINA
cULus UL 508	
cULus ANSI/ISA 12.12.01	Class I, Div. 2, Grp. ABCD, T4
TÜV 14.1911 X	Ex d [ia Ma] I Mb, Ex nA [ia Ga] IIC T4 Gc, Ex tc [ia Da] IIIC T135 °C Dc
TÜV 12 ATEX 106032 X	I M2 (M1) Ex d [ia Ma] I Mb, II 3 (1) G Ex nA [ia Ga] IIC T4 Gc, II 3 (1) D Ex tc [ia Da] IIIC T135°C Dc
IECEx TUN 12.0039 X	Ex d [ia Ma] I Mb, Ex nA [ia Ga] IIC T4 Gc, Ex tc [ia Da] IIIC T135°C Dc

2-Channel Analog Input Module for Thermocouples Ex i

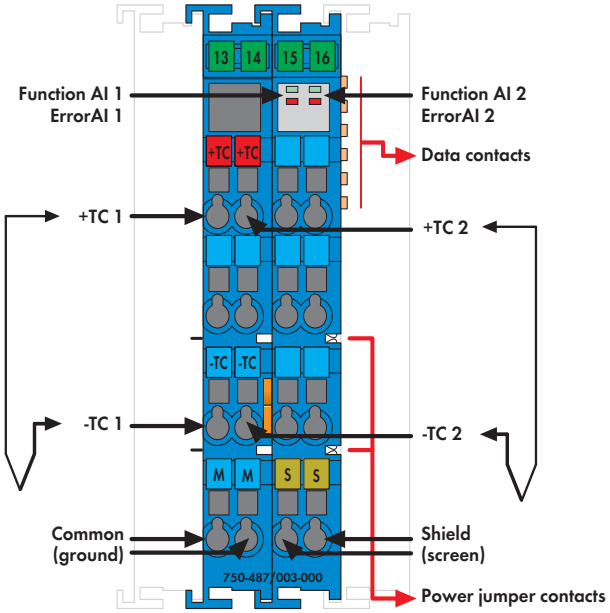

Delivered without miniature WSB markers

The analog input module directly connects two thermocouples operating in hazardous environments of Zones 0 and 1.
The WAGO-I/O-SYSTEM 750 must be installed either in Zone 2 or in a non-hazardous area. Internal electrical isolation allows operation of grounded sensors. The module automatically linearizes the entire temperature range.
Cold junction compensation mitigates the clamping unit offset voltage over the 0 °C - 55 °C operating range.
The 24 V supply is derived from the module's power jumper contacts. Field and system levels are electrically isolated.
The module mode is parameterized via WAGO-I/O-*CHECK* 3 software.

LED displays:
- Green LED (availability ON/OFF)
- Red LED (wire breakage, measuring range overflow/underflow)

Note:
Only use the analog input module in connection with the 24VDC Ex i Supply Module!

General information (e.g., installation regulations) on explosion protection is available in the WAGO-I/O-SYSTEM 750 manuals!

Description	Item No.	Pack. Unit
2AI TC Ex i	**750-487/003-000**	1

Accessories		Item No.	Pack. Unit
Miniature WSB Quick marking system			
	plain	**248-501**	5
	with marking	see Section 11	

Technical Data	
Number of inputs	2
Current consumption, system voltage typ.	
(5 VDC)	13.5 mA
Voltage via power jumper contacts	24 V DC (provided via Ex-i supply
	U_O = max. 27.3 V)
Conversion time	≤ 320 ms (both channels)
Measuring error (25 °C)	< ± 6 K (type K);
	voltage input < ± 2 K;
	cold juncrtion compensation < ± 4 K
Temperature coefficient	< ± 0.2 K / K of full scale value (type K)
Cold junction compensation	internal; at each pair of modules
Resolution (over entire range)	0.1 °C or 0.01 mV for voltage
	measurement
Internal resistance	≥ 1MΩ
Measuring range	**Thermocouple:**
	Type B: +600 °C ... +1,800 °C
	Type E: –100 °C ... +1,000 °C
	Type J: –100 °C... +1,200 °C
	Type K: –100 °C ... +1,370 °C* *(default
	setting)
	Type L: -100 °C ... +900 °C
	Type N: –100 °C ... +1,300 °C
	Type R: 0 °C ... +1,700 °C
	Type S: –50 °C ... +1,700 °C
	Type T: –100 °C ... +400 °C
	Type U: -25 °C ... +600 °C
	voltage sensor:
	MB1: ± 30 mV
	MB2: ± 60 mV
	MB3: ± 120 mV
Power consumption $P_{max.}$	0.3 W
Power loss P_V	0.3 W

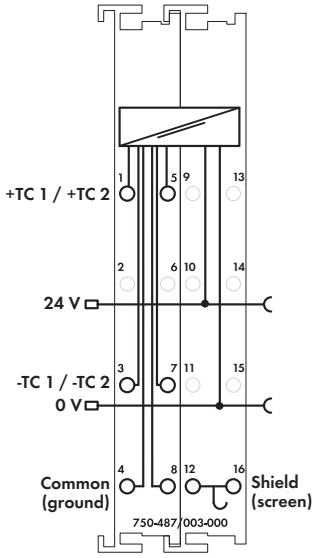

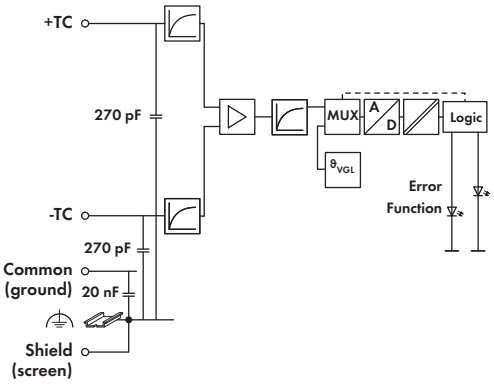

Technical Data

Isolation	U_M = 375 V system/supply
Bit width	2 x 16 bits data
	2 x 8 bits control/status (optional)
Wire connection	CAGE CLAMP®
Cross sections	0.08 mm² ... 2.5 mm² / AWG 28 ... 14
Strip lengths	8 ... 9 mm / 0.33 in
Width	24 mm
Weight	48 g
EMC immunity of interference	acc. to EN 61000-6-2, marine applications
EMC emission of interference	acc. to EN 61000-6-3, marine applications

Explosion Protection

Electric circuit, safety-relevant data	U_o = 14.4 V; I_o = 29.1 mA; P_o = 52.4 mW; Characteristic: Linear
Reactances Ex ia IIC	L_o = 52 mH; C_o = 650 nF
Reactances Ex ia IIB	L_o = 100 mH; C_o = 4.0 µF
Reactances Ex ia IIA	L_o = 300 mH; C_o = 15.8 µF
Reactances Ex ia I	L_o = 400 mH; C_o = 17.9 µF
Reactances	(The above-listed ratings do not account for the coincidental occurrence of capacitances and inductances. For ratings taking the coincidental occurrence of capacitances and inductances into account, see manual)

Standards, Guidelines and Approvals

Conformity marking	CE
ATEX Guideline	EN 60079-0, EN 60079-11, EN 60079-15, EN 60079-26, EN 60079-31
Korea Certification	
Marine applications	BV, GL, LR, NKK, PRS, RINA
UL 508	
ANSI/ISA 12.12.01	Class I, Div. 2, Grp. ABCD, T4
TÜV 14.1911 X	Ex d [ia Ma] I Mb, Ex nA [ia Ga] IIC T4 Gc, Ex tc [ia Da] IIIC T135 °C Dc
TÜV 12 ATEX 106032 X	I M2 (M1) Ex d [ia Ma] I Mb, II 3 (1) G Ex nA [ia Ga] IIC T4 Gc, II 3 (1) D Ex tc [ia Da] IIIC T135°C Dc
IECEx TUN 12.0039 X	Ex d [ia Ma] I Mb, Ex nA [ia Ga] IIC T4 Gc, Ex tc [ia Da] IIIC T135°C Dc

2-Channel Analog Output Module 0-20 mA, Ex i

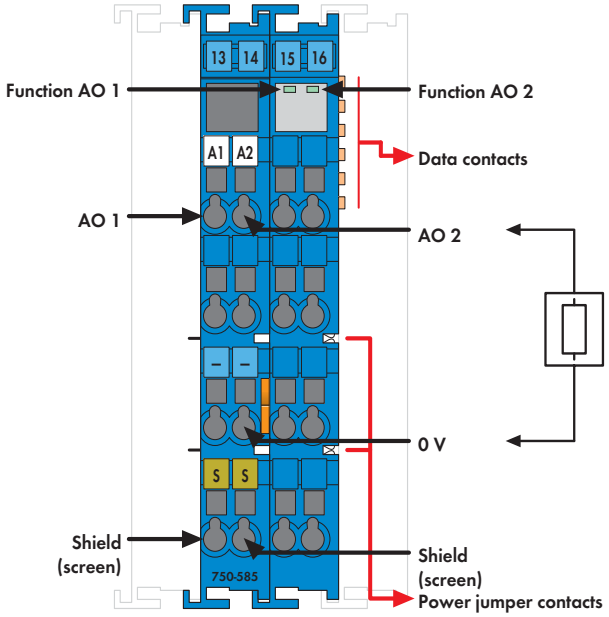

Delivered without miniature WSB markers

The analog output modules transmits intrinsically safe 0/4 - 20mA signals in the hazardous Zone 0+1.
The WAGO-I/O-SYSTEM 750 must be installed either in Zone 2 or in a non-hazardous area.
Power is derived from the power jumper contacts.
The outputs are short-circuit proof.

LED displays:
- Green LED (output status)

Field and system levels are electrically isolated.

Note: The analog output module must only be operated via Ex i 24VDC power supply!

General information (e.g., installation regulations) on explosion protection is available in the WAGO-I/O-SYSTEM 750 manuals!

Description	Item No.	Pack. Unit
2AO 0-20mA Ex i	**750-585**	1
2AO 4-20 mA Ex i	**750-586**	1

Accessories		Item No.	Pack. Unit
Miniature WSB Quick marking system			
	plain	**248-501**	5
	with marking	see Section 11	

Technical Data	
No. of outputs	2
Current consumption, system voltage typ.	
(5 VDC)	21 mA
Voltage via power jumper contacts	24 V DC (provided via Ex-i supply
	U_O = max. 27.3 V)
Signal current	0 ... 20 mA (750-585)
	4 mA ... 20 mA (750-586)
Load impedance	< 500 Ω
Linearity	± 2 LSB
Resolution	12 bits
Conversion time	< 2 ms
Output error 25 °C	< ± 0.2 % of the full scale value
Temperature coefficient	< ± 0.01 % / K of the full scale value
Current consumption, power jumper	
contact typ. (24 VDC)	19 mA + load (2 x 20 mA)
Power consumption $P_{max.}$	1.5 W
Power loss P_V	0.9 W
Isolation	U_M = 375 V system/supply
Bit width	2 x 16 bits data

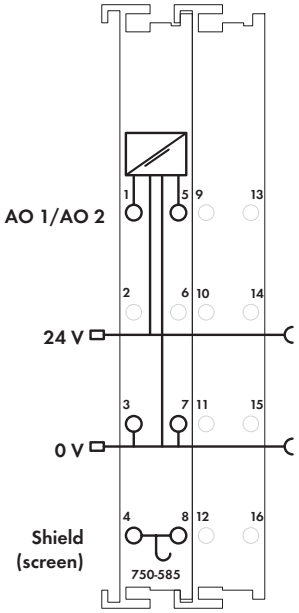

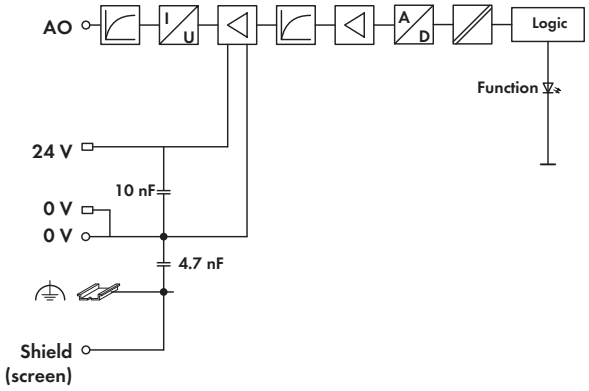

Technical Data

Wire connection	CAGE CLAMP®
Cross sections	0.08 mm² ... 2.5 mm² / AWG 28 ... 14
Strip lengths	8 ... 9 mm / 0.33 in
Width	24 mm
Weight	58.5 g
EMC immunity of interference	acc. to EN 61000-6-2, marine applications
EMC emission of interference	acc. to EN 61000-6-3, marine applications

Explosion Protection

Electric circuit, safety-relevant data	U_o = 27.3 V ; I_o = 57.5 mA; P_o = 392 mW; Characteristic: Linear
Reactances Ex ia IIC	L_o = 11 mH; C_o = 88 nF
Reactances Ex ia IIB	L_o = 56 mH; C_o = 680 nF
Reactances Ex ia IIA	L_o = 90 mH; C_o = 2.2 µF
Reactances Ex ia I	L_o = 110 mH; C_o = 3.5 µF
Reactances	(The above-listed ratings do not account for the coincidental occurrence of capacitances and inductances. For ratings taking the coincidental occurrence of capacitances and inductances into account, see manual)

Standards, Guidelines and Approvals

Conformity marking	CE
ATEX Guideline	EN 60079-0, EN 60079-11, EN 60079-15, EN 60079-26, EN 60079-31
Korea Certification	
Marine applications	ABS[1], BV[1], DNV[1], GL, KR[1], LR[1], NKK[1], PRS[1], RINA[1]
UL 508	
ANSI/ISA 12.12.01	Class I, Div. 2, Grp. ABCD, T4
TÜV 14.1911 X	Ex d [ia Ma] I Mb, Ex nA [ia Ga] IIC T4 Gc, Ex tc [ia Da] IIIC T135 °C Dc
TÜV 12 ATEX 106032 X	I M2 (M1) Ex d [ia Ma] I Mb, II 3 (1) G Ex nA [ia Ga] IIC T4 Gc, II 3 (1) D Ex tc [ia Da] IIIC T135°C Dc
IECEx TUN 12.0039 X	Ex d [ia Ma] I Mb, Ex nA [ia Ga] IIC T4 Gc, Ex tc [ia Da] IIIC T135°C Dc

[1] Does not apply to 750-586

Up/Down Counter, Ex i

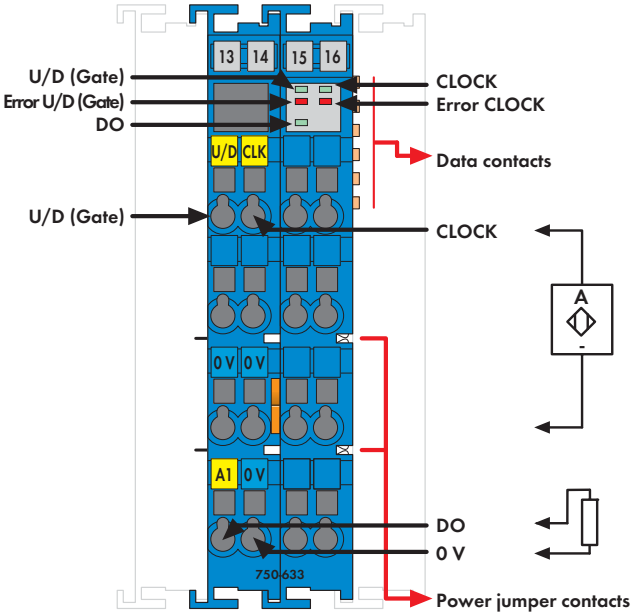

Delivered without miniature WSB markers

The 750-633 Counter records binary pulse signals with NAMUR-compliant levels and transmits the counter state to the fieldbus system. The U/D input allows either Up or Down counting. Counter and digital output (DO) can be set or reset via control byte. A limit value can be set at which the DO output is activated when this value is exceeded. The output is short-circuit proof.

Operating modes:
- Up counter with enable input
- Up/Down counter
- Frequency counter
- Peak-time counter

Field and system levels are electrically isolated.

LED indicators:
- Green LED (Up/Down + CLK + DO status)
- Red LED (Up/Down + CLK error status)

Note: The up/down counter must only be operated via Ex i 24VDC power supply!
General information (e.g., installation regulations) on explosion protection is available in the WAGO-I/O-SYSTEM 750 manuals!

Description	Item No.	Pack. Unit
Up/Down Counter, Ex i	**750-633**	1

Accessories		Item No.	Pack. Unit
Miniature WSB Quick marking system			
	plain	**248-501**	5
	with marking	see Section 11	

Technical Data	
No. of counters	1
No. of outputs	1
Current consumption, system voltage typ.	
(5 VDC)	25 mA
Voltage via power jumper contacts	24 V DC (provided via Ex-i supply
	U_O = max. 27.3 V)
Counter U/D (Gate), CLK	
Sensor supply U_V	8.2 VDC
Signal current (0)	≤ 1.2 mA
Signal current (1)	≥ 2.1 mA
Input filter	10 µs
Switching hysteresis	0.2 mA
Open-circuit voltage	8.2 VDC
Input resistance	1 kOhm
Short-circuit current	8.2 mA (+/- 5 %)
Switching frequency	20 Hz ... 50 kHz
Counter depth	32 bits
Output:	
Open-circuit voltage	24 V DC
Output voltage	24 V DC
Internal resistance R_i	285 Ω
Current consumption, power jumper	
contact typ. (24 VDC)	31 mA + sensor load + actuator load
Power consumption $P_{max.}$	2.2 W (sensor load: 8.2 mA + actuator
	load: 45 mA)
Power loss P_V	1.7 W (sensor load: 8.2 mA + actuator
	load: 45 mA)
Isolation (peak value)	U_M = 375 V system/supply
Bit width	1 x 32-bit data,
	1 x 8-bit status/diagnostics

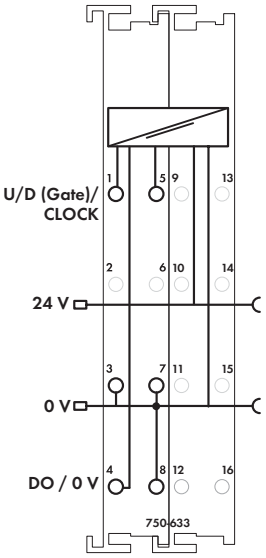

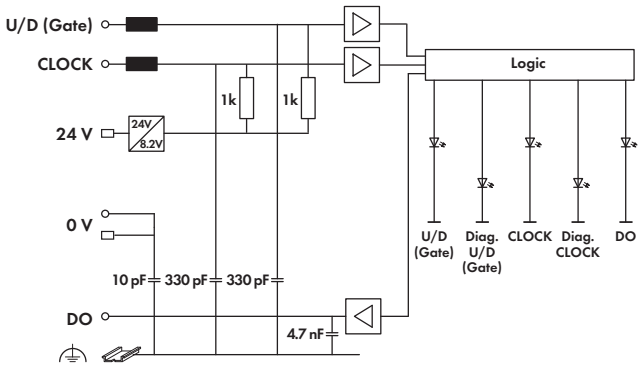

Technical Data

Wire connection	CAGE CLAMP®
Cross sections	0.08 mm² ... 2.5 mm² / AWG 28 ... 14
Strip lengths	8 ... 9 mm / 0.33 in
Width	24 mm
Weight	89.1 g
EMC immunity of interference	acc. to EN 61000-6-2, marine applications
EMC emission of interference	acc. to EN 61000-6-3, marine applications

Explosion Protection

Safety Data – Input	U_o = 12 V; I_o = 13.5 mA; P_o = 40.5 mW;
	Characteristic: Linear
Reactances, inputs, Ex ia IIC	L_o = 100 mH; C_o = 1,4 µF
Reactances, inputs, Ex ia IIB	L_o = 100 mH; C_o = 9 µF
Reactances, inputs, Ex ia IIA	L_o = 100 mH; C_o = 36 µF
Reactances, inputs, Ex ia I	L_o = 100 mH; C_o = 38 µF
Safety data - output	U_o = 27.3 V; I_o = 103 mA; P_o = 703 mW;
	linear characteristic curve
Reactances, output, Ex ia IIC	L_o = 0,5 mH; C_o = 88 nF
Reactances, output, Ex ia IIB	L_o = 10 mH; C_o = 683 nF
Reactances, output, Ex ia IIA	L_o = 18 mH; C_o = 2,2 µF
Reactances, output, Ex ia I	L_o = 26 mH; C_o = 3,6 µF
Reactances	(The above-listed ratings do not account for the coincidental occurrence of capacitances and inductances. For ratings taking the coincidental occurrence of capacitances and inductances into account, see manual)

Standards, Guidelines and Approvals

Conformity marking	CE
ATEX Guideline	EN 60079-0, EN 60079-11, EN 60079-15, EN 60079-26, EN 60079-31
Korea Certification	
Marine applications	BV, GL
UL 508	
ANSI/ISA 12.12.01	Class I, Div. 2, Grp. ABCD, T4
TÜV 14.1911 X	Ex d [ia Ma] I Mb, Ex nA [ia Ga] IIC T4 Gc, Ex tc [ia Da] IIIC T135 °C Dc
TÜV 12 ATEX 106032 X	I M2 (M1) Ex d [ia Ma] I Mb, II 3 (1) G Ex nA [ia Ga] IIC T4 Gc, II 3 (1) D Ex tc [ia Da] IIIC T135°C Dc
IECEx TUN 12.0039 X	Ex d [ia Ma] I Mb, Ex nA [ia Ga] IIC T4 Gc, Ex tc [ia Da] IIIC T135°C Dc

Supply and Segment Modules

Housing Design 750/753 Series	
Dimensions (mm) W x H x L	12 x 65 x 100 (Height from upper edge of the DIN-rail)
Wire connection	CAGE CLAMP®
Cross sections	0.08 mm² ... 2.5 mm² / 28 ... 14 AWG
Strip lengths	750 Series: 8 ... 9 mm / 0.33 in. 753 Series: 9 ... 10 mm / 0.37 in.

Housing Design 750 Series with Push-in CAGE CLAMP® Connection (16 Connection Terminals)	
Wire connection	Push-in CAGE CLAMP®
Cross sections	solid: 0.08 mm² ... 2.5 mm² / 28 ... 16 AWG fine-stranded: 0.25 mm² ... 1.5 mm² / 22 ... 16 AWG
Strip lengths	8 ... 9 mm / 0.33 in.

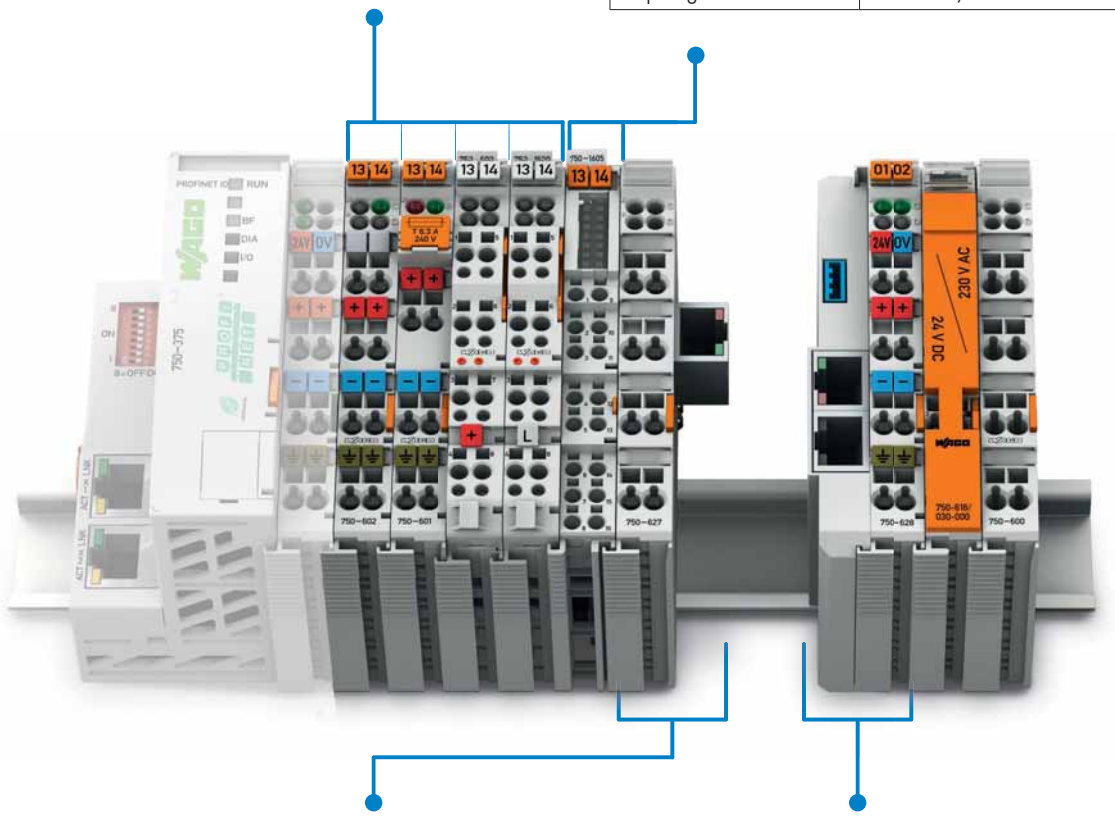

Special Housing Design, Internal Data Bus Extension, End Module	
Dimensions (mm) W x H x L	24 x 65 x 100 (Height from upper edge of the DIN-rail)

Special Housing Design, Internal Data Bus Extension, Coupler Module	
Dimensions (mm) W x H x L	25 x 65 x 100 (Height from upper edge of the DIN-rail)

I/O-Systems; Supply and Segment Modules
Contents

Function	Description	Item No.			Page
		Standard	/T Extended operating temperature range: -20 °C ... +60 °C	Pluggable	
Power Supply Modules	24 VDC, passiv	750-602	750-602/025-000	753-602	370
24 VDC	24 VDC, max. 6.3 A, without diagnostics, with fuse carrier	750-601			371
	24 VDC, max. 6.3 A, with diagnostics, with fuse carrier	750-610			372
	24 VDC, 5 ... 15 V	750-623			373
24 VDC with Bus Power Supply	24 VDC	750-613			374
24 VAC	24 VAC, with fuse carrier	750-617			371
120 VAC	120 VAC, max. 6.3 A, without diagnostics, with fuse carrier	750-615			371
230 VAC	0 ... 230 V AC/DC, without diagnostics, passiv	750-612		753-612	370
	230 VAC, max. 6.3 A, without diagnostics, with fuse carrier	750-609			371
	230 VAC, max. 6.3 A, with diagnostics, with fuse carrier	750-611			372
DALI Multi-Master DC/DC Converter	DALI Multi-Master DC/DC Converter			753-620	375
Field Side Connection Modules	24 VDC	750-603		753-603	377
	0 VDC	750-604		753-604	378
	0 ... 230 V AC/DC	750-614		753-614	376
	16+, 24 VDC	750-1605			379
	16-, 0 VDC	750-1606			380
	8+/8-, 24 VDC / 0 VDC	750-1607			381
Filter Modules	Field Side Power Supply Filter with Overvoltage (Surge) Protection, high isolation	750-624/020-000			382
	Field Side Power Supply Filter with Overvoltage (Surge) Protection, high isolation / without power jumper contacts	750-624/020-001			382
	Field Side Power Supply Filter with Overvoltage (Surge) Protection	750-624			382
	Field Side Power Supply Filter with Overvoltage (Surge) Protection / without power jumper contacts	750-624/000-001			382
	Power Supply Filter with Overvoltage (Surge) Protection, high isolation	750-626/020-000	750-626/025-001		383
	Power Supply Filter with Overvoltage (Surge) Protection	750-626	750-626/025-000		383
Internal Data Bus Extension	End Module	750-627			384
	Coupler Module	750-628			385
Binary Spacer Modules	Binary Spacer Module	750-622			386
	Binary Spacer Module, activ			753-1629	387
	Binary Spacer Module, activ, without power jumper contacts			753-1629/000-001	387
	Binary Spacer Module, passiv			753-629/020-000	388
Separation Modules	Separation Module	750-616			389
	Separation Module with printing	750-616/030-000			389
	Separation Module with contacts	750-621			389
End Module	End Module	750-600	750-600/025-000		390
Ex i		see Section 4.9			

Supply Module 24 V DC / 230 V AC/DC

passive

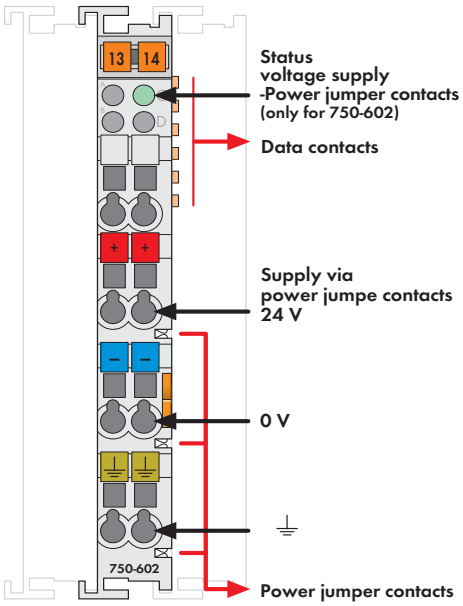

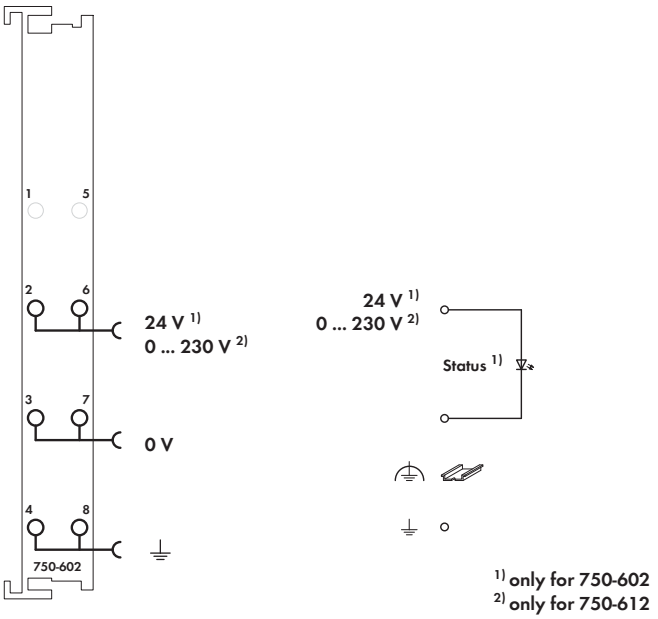

Delivered without miniature WSB markers

The supply module provides field side power through the power jumper contacts.

Maximum available supply current to all connected modules is 10A.

Should higher currents be necessary, intermediate supply modules must be added to the assembly. Supply modules may also be used to change the supply voltage to certain I/O modules within the assembly - on one fieldbus node.

Description	Item No.	Pack. Unit
24V DC Power Supply	**750-602**	1
24V DC Power Supply/T	**750-602/025-000**	1
Extended temperature range: -20 °C ... +60 °C		
0-230V AC/DC Power Supply	**750-612**	1
24V DC Power Supply (without connector)	**753-602**	1
0-230V AC/DC Power Supply (without connector)	**753-612**	1

Accessories		Item No.	Pack. Unit
	753 Series Connectors	**753-110**	25
	Coding elements	**753-150**	100
	Miniature WSB Quick marking system		
	plain	**248-501**	5
	with marking	see Section 11	

Approvals

Conformity marking	CE
Korea Certification	
Marine applications (versions upon request)	ABS, BV[1], DNV, GL, KR, LR[1], NKK, PRS, RINA
cULus UL 508	
cULus ANSI/ISA 12.12.01	Class I, Div. 2, Grp. ABCD, T4
TÜV 07 ATEX 554086 X	I M2 Ex d I Mb, II 3 G Ex nA IIC T4 Gc, II 3 D Ex tc IIIC T135°C Dc
IECEx TUN 09.0001 X	Ex d I Mb, Ex nA IIC T4 Gc, Ex tc IIIC T135°C Dc

[1] Does not apply to 753-602, -612

Technical Data

Voltage via power jumper contacts (max.)	24 V DC (750-602 / 753-602)
	0 V ... 230 V AC/DC
	(750-612 / 753-612)
Current via power jumper contacts (max.)	10 A DC
Wire connection	CAGE CLAMP®
Cross sections	0.08 mm² ... 2.5 mm² / AWG 28 ... 14
Strip lengths	8 ... 9 mm / 0.33 in
	9 ... 10 mm / 0.37 in
Width	12 mm
Weight	44.2 g
EMC immunity of interference	acc. to EN 61000-6-2, marine applications
EMC emission of interference	acc. to EN 61000-6-4, marine applications

Supply Module 24 V DC / 24 V AC / 230 V AC / 120 V AC

with fuse carrier

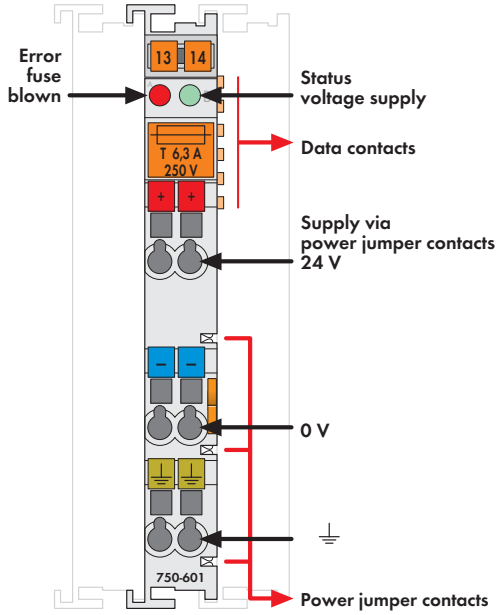

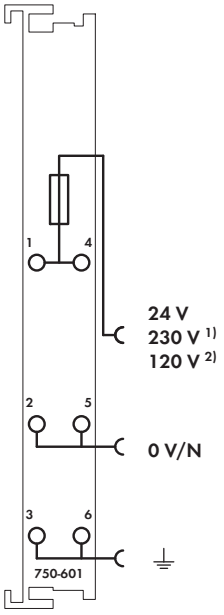

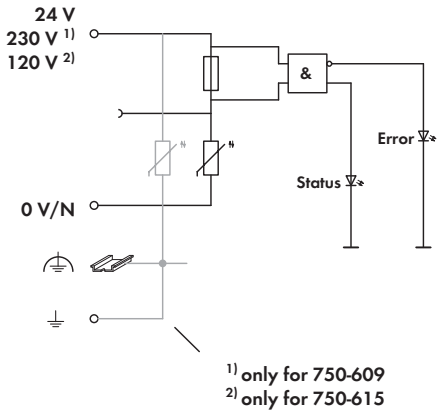

Delivered without miniature WSB markers

The supply module provides field side power through the power jumper contacts.

Maximum available supply current to all connected modules is 6.3A. Should higher currents be necessary, intermediate supply modules must be added to the assembly. Supply modules may also be used to change the supply voltage to certain I/O modules within the assembly - on one fieldbus.

This module is fuse-protected (size 5 x 20mm). The fuse can be changed quickly, with ease, from the retractable fuse carrier.

A blown fuse is indicated by an LED.

Description	Item No.	Pack. Unit
24V DC Power Supply/Fuse	**750-601**	1
230V AC Power Supply/Fuse	**750-609**	1
120V AC Power Supply/Fuse	**750-615**	1
24V AC Power Supply/Fuse	**750-617**	1

Accessories		Item No.	Pack. Unit
Miniature WSB Quick marking system			
	plain	**248-501**	5
	with marking	see Section 11	

Approvals

Conformity marking	CE
Korea Certification	(750-609, -615, -617)
Marine applications	ABS, BV, DNV, GL, KR, LR, NKK, PRS, RINA (750-601, -609)
UL 508	
ANSI/ISA 12.12.01	Class I, Div. 2, Grp. ABCD, T4[1)]
TÜV 07 ATEX 554086 X	I M2 Ex d I Mb, II 3 G Ex nA IIC T4 Gc, II 3 D Ex tc IIIC T135°C Dc[1)]
IECEx TUN 09.0001 X	Ex d I Mb, Ex nA IIC T4 Gc, Ex tc IIIC T135°C Dc[1)]

[1)] Does not apply to 750-617

Technical Data

Voltage via power jumper contacts (max.)	24 V DC (750-601)
	230 V AC (750-609)
	120 V AC (750-615)
	24 VAC (750-617)
Current via power jumper contacts (max.)	6.3 A DC
Fuse	5 x 20; T 6.3 A (Fuse not included. Use UL recognized fuses only!)
Wire connection	CAGE CLAMP®
Cross sections	0.08 mm² ... 2.5 mm² / AWG 28 ... 14
Strip lengths	8 ... 9 mm / 0.33 in
Width	12 mm
Weight	56 g
EMC immunity of interference	acc. to EN 61000-6-2, marine applications
EMC emission of interference	acc. to EN 61000-6-4, marine applications

Supply Module 24 V DC / 230 V AC

with fuse carrier / diagnostics

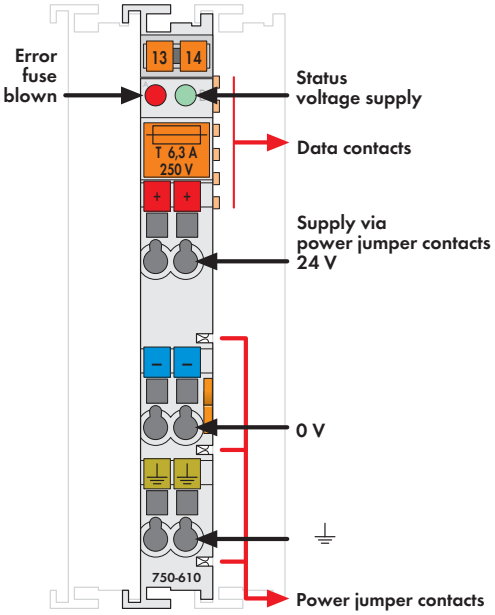

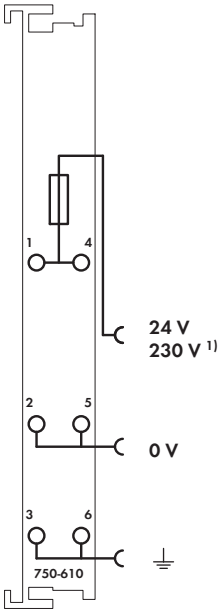

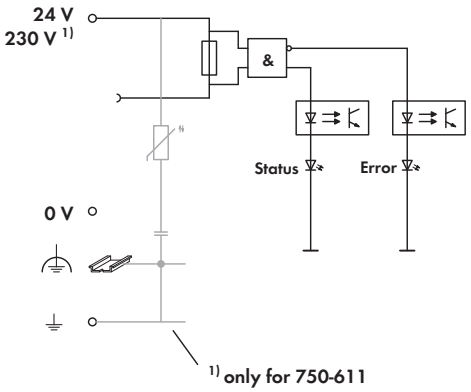

Delivered without miniature WSB markers

The supply module provides field side power through the power jumper contacts.

Maximum available supply current to all connected modules is 6.3A. Should higher currents be necessary, intermediate supply modules must be added in the assembly. Supply modules may also be used to change the supply voltage to certain I/O modules within the assembly - on one fieldbus.

This module is fuse-protected (size 5 x 20mm). The fuse can be changed quickly, with ease, from the retractable fuse carrier.

A blown fuse and the status of the supply voltage are indicated via LEDs.

The module sends information about the status of the supply module to the fieldbus coupler through two input bits. One bit is for the status of the fuse. The other bit is for the status of the supply voltage.

Description	Item No.	Pack. Unit
24V DC Power Supply/Fuse/Diagn.	**750-610**	1
230V AC Power Supply/Fuse/Diagn.	**750-611**	1

Accessories		Item No.	Pack. Unit
Miniature WSB Quick marking system			
	plain	**248-501**	5
	with marking	see Section 11	

Approvals

Conformity marking	CE
Korea Certification	
Marine applications	ABS, BV, DNV, GL, KR, LR, NKK, PRS, RINA
UL 508	
ANSI/ISA 12.12.01	Class I, Div. 2, Grp. ABCD, T4
TÜV 07 ATEX 554086 X	I M2 Ex d I Mb,
	II 3 G Ex nA IIC T4 Gc,
	II 3 D Ex tc IIIC T135°C Dc
IECEx TUN 09.0001 X	Ex d I Mb,
	Ex nA IIC T4 Gc,
	Ex tc IIIC T135°C Dc

Technical Data

Voltage via power jumper contacts (max.)	24 V DC (750-610)
	230 V AC (750-611)
Current via power jumper contacts (max.)	6.3 A DC
Current consumption (internal)	5 mA
Supply voltage detection level on	> 15 V DC (750-610)
	> 164 V AC (750-611)
Supply voltage detection level off	< 5 V DC (750-610)
	< 40 V AC (750-611)
Fuse	5 x 20; T 6.3 A (Fuse not included.
	Use UL recognized fuses only!)
Internal bit width	2 bits
Wire connection	CAGE CLAMP®
Cross sections	0.08 mm² ... 2.5 mm² / AWG 28 ... 14
Strip lengths	8 ... 9 mm / 0.33 in
Width	12 mm
Weight	51.5 g
EMC immunity of interference	acc. to EN 61000-6-2, marine applications
EMC emission of interference	acc. to EN 61000-6-4, marine applications

Supply Module 24 V DC / 5 V - 15 V

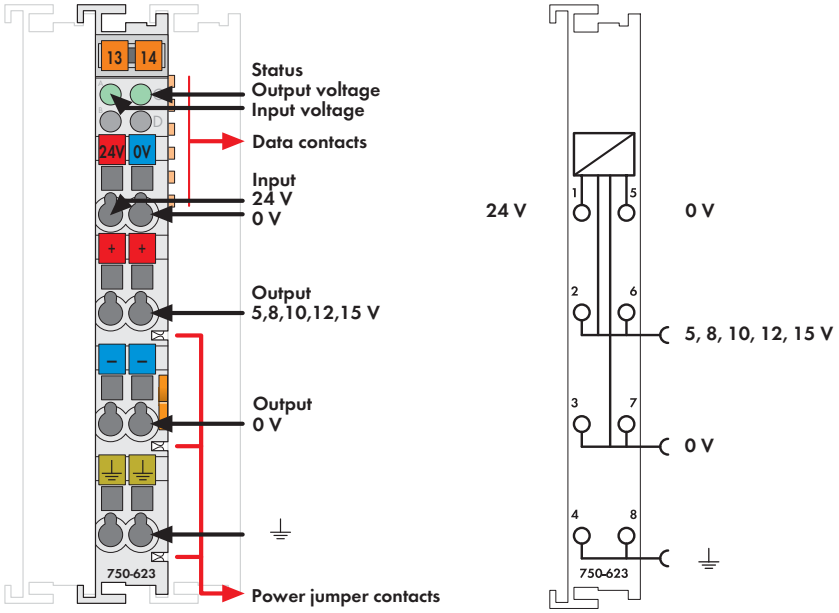

Delivered without miniature WSB markers

The 750-623 Series Power Supply Module generates 5V, 8V, 10V, 12V and 15VDC output voltages from the 24VDC input voltage. The output voltage is selected by a DIP switch located on the side of the module and can be accessed at the CAGE CLAMP® terminals. Downstream modules are supplied with the selected voltage via the power jumper contacts. LEDs indicate the module's operating state. The input voltage and the output voltage are not electrically isolated.

Description	Item No.	Pack. Unit
Supply Module DC 24V / 5-15V	**750-623**	1

Accessories		Item No.	Pack. Unit
Miniature WSB Quick marking system			
	plain	**248-501**	5
	with marking	see Section 11	

Approvals

Conformity marking	CE
Korea Certification	
Marine applications	BV, GL, LR, NKK, PRS, RINA
cULus UL 508	
cULus ANSI/ISA 12.12.01	Class I, Div. 2, Grp. ABCD, T4
TÜV 07 ATEX 554086 X	I M2 Ex d I Mb, II 3 G Ex nA IIC T4 Gc, II 3 D Ex tc IIIC T135°C Dc
IECEx TUN 09.0001 X	Ex d I Mb, Ex nA IIC T4 Gc, Ex tc IIIC T135°C Dc

Technical Data

Power supply	24 V DC (-15 % ... +20 %)
Output voltage	5 V, 8 V, 10 V, 12 V, 15 V DC
Output current	0.5 A (1 A at 5 V)
Wire connection	CAGE CLAMP®
Cross sections	0.08 mm² ... 2.5 mm² / AWG 28 ... 14
Strip lengths	8 ... 9 mm / 0.33 in
Width	12 mm
Weight	53.7 g
EMC immunity of interference	acc. to EN 61000-6-2, marine applications
EMC emission of interference	acc. to EN 61000-6-3, marine applications

Internal System Supply Module 24 V DC

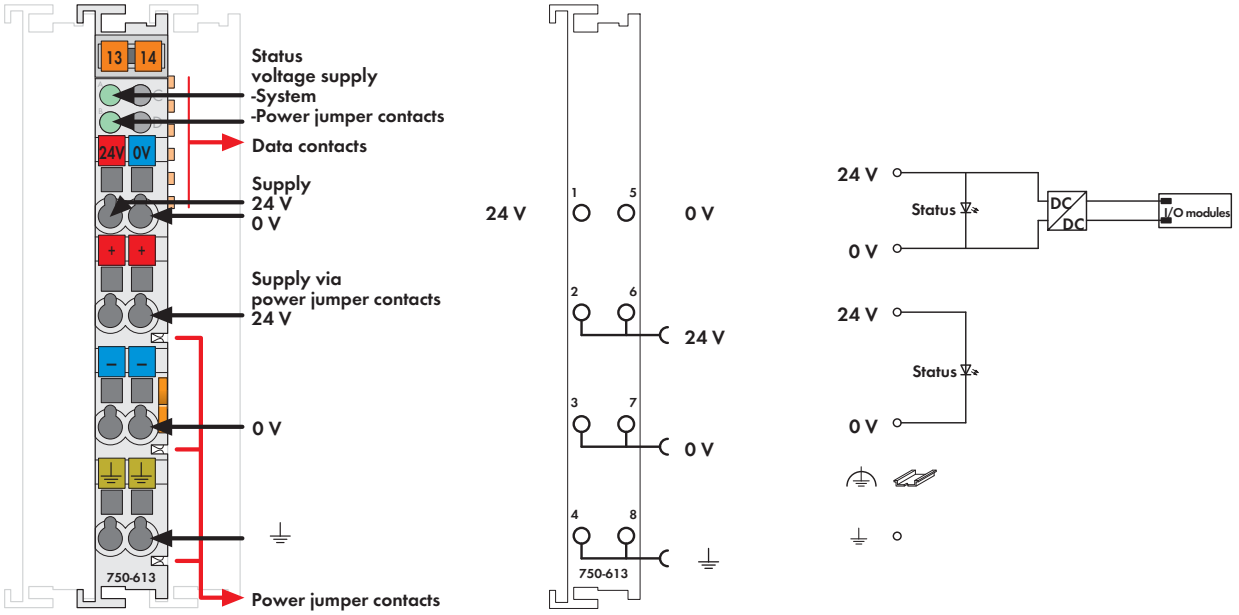

The internal system supply module increases the current supply for the internal 5VDC system by 2A.

If the the internal current consumption of all modules is higher than 2A, an additional supply module must be added.

The supply module also supplies field side power to the adjoining modules via the power jumper contacts.

Description	Item No.	Pack. Unit
24V DC Bus Power Supply	**750-613**	1

Accessories		Item No.	Pack. Unit
Miniature WSB Quick marking system			
	plain	**248-501**	5
	with marking	see Section 11	

Approvals

Conformity marking	CE
Korea Certification	
Marine applications	ABS, BV, DNV, GL, KR, LR, NKK, PRS, RINA
UL 508	
ANSI/ISA 12.12.01	Class I, Div. 2, Grp. ABCD, T4
TÜV 07 ATEX 554086 X	I M2 Ex d I Mb, II 3 G Ex nA IIC T4 Gc, II 3 D Ex tc IIIC T135°C Dc
IECEx TUN 09.0001 X	Ex d I Mb, Ex nA IIC T4 Gc, Ex tc IIIC T135°C Dc

Technical Data

Power supply	24 V DC (-15 % ... +20 %)
Input current max.	500 mA
Efficiency of the power supply (typ.) at	
nominal load (24 V)	90 %
Total current for I/O modules	2000 mA
Voltage via power jumper contacts (max.)	24 V DC (-25 % ... +30 %)
Current via power jumper contacts (max.)	10 A DC
Wire connection	CAGE CLAMP®
Cross sections	0.08 mm² ... 2.5 mm² / AWG 28 ... 14
Strip lengths	8 ... 9 mm / 0.33 in
Width	12 mm
Weight	58.5 g
EMC immunity of interference	acc. to EN 61000-6-2, marine applications
EMC emission of interference	acc. to EN 61000-6-4, marine applications

DALI Multi-Master DC/DC Converter

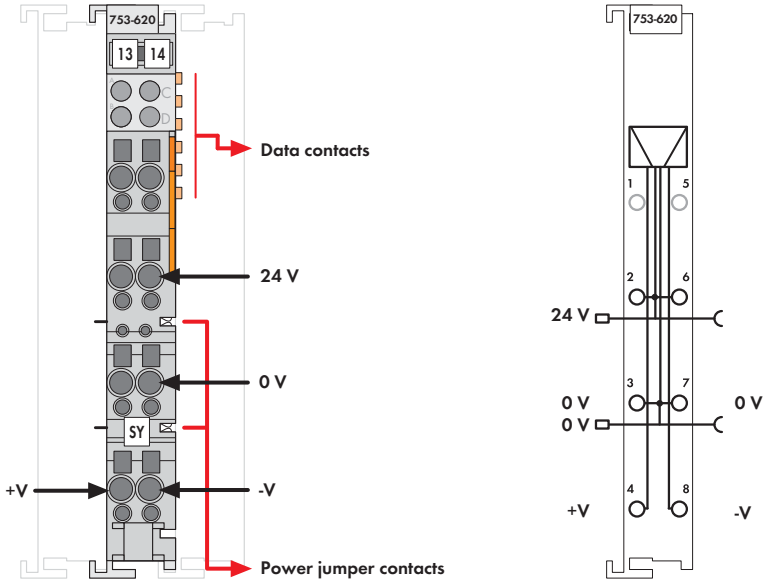

The 753-620 DALI Multi-Master DC/DC Converter is a system module within the WAGO-I/O-SYSTEM 750. The 1/2 inch (12mm) wide module is designed to supply a 753-647 DALI Multi-Master Module and delivers maximum 200mA current to operate a single DALI line (the maximum number of slaves depends on the total power consumption of the single DALI devices).
The 753-620 DC/DC Converter is supplied via 24V power jumper contacts. Cable bridges connect the DC/DC Converter to the DALI Multi-Master Module.

Description	Item No.	Pack. Unit
DALI Multi-Master DC/DC Converter	**753-620**	1

Accessories		Item No.	Pack. Unit
Miniature WSB Quick marking system			
	plain	**248-501**	5
	with marking	see Section 11	
753 Series Connectors		**753-110**	25
Coding elements		**753-150**	100
753 Series pluggable connector and coding accessories are part of the delivery.			

Approvals

UL 508

Technical Data	
Voltage via power jumper contacts (max.)	24 VDC
Input voltage range	18 ... 31.2 VDC
Current via power jumper contacts (max.)	10 A DC
Output voltage	18 VDC (at +V and -V)
Nominal output current	200 mA
Short circuit protection	permanent
Test voltage input / output	1.5 kV eff.
Wire connection	CAGE CLAMP®
Cross sections	0.08 mm² ... 2.5 mm² / AWG 28 ... 14
Strip lengths	9 ... 10 mm / 0.37 in
Width	12 mm
Weight	55 g

Field Side Connection Module

0 ... 230 V AC/DC

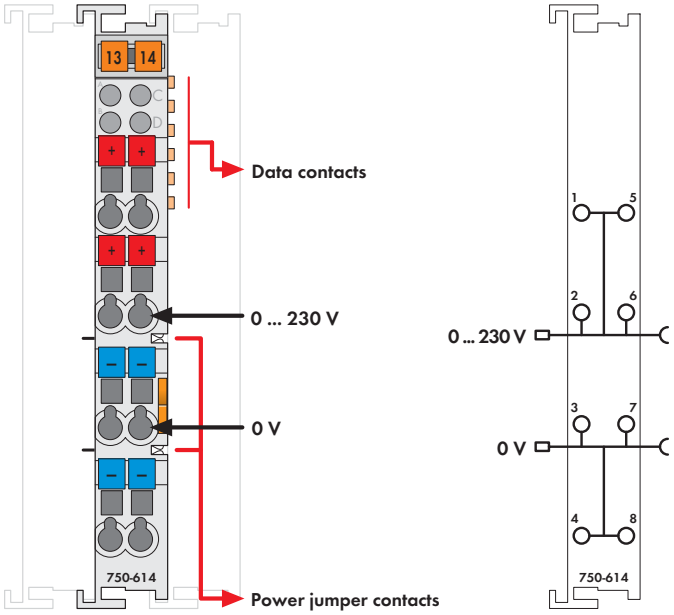

Fig. 750 Series
Delivered without miniature WSB markers

This module allows additional + and - voltage connection points (up to 4 additional), eliminating external terminal blocks.

Note: Ground (earth) or shield (screen) connection is discontinued at this point.

Description	Item No.	Pack. Unit
Field Side Connection	**750-614**	1
Field Side Connection (without connector)	**753-614**	1

Accessories	Item No.	Pack. Unit
753 Series Connectors	**753-110**	25
Coding elements	**753-150**	100
Miniature WSB Quick marking system		
plain	**248-501**	5
with marking	see Section 11	

Approvals

Conformity marking	CE
Korea Certification	
Marine applications	ABS, BV, DNV, GL, KR, LR, NKK, PRS, RINA
UL 508	
ANSI/ISA 12.12.01	Class I, Div. 2, Grp. ABCD, T4
TÜV 07 ATEX 554086 X	I M2 Ex d I Mb, II 3 G Ex nA IIC T4 Gc, II 3 D Ex tc IIIC T135°C Dc
IECEx TUN 09.0001 X	Ex d I Mb, Ex nA IIC T4 Gc, Ex tc IIIC T135°C Dc

Technical Data

Voltage via power jumper contacts (max.)	0 V ... 230 V AC/DC
Current via power jumper contacts (max.)	10 A AC/DC
Wire connection	CAGE CLAMP®
Cross sections	0.08 mm² ... 2.5 mm² / AWG 28 ... 14
Strip lengths, 750/753 Series	8 ... 9 mm / 0.33 in 9 ... 10 mm / 0.37 in
Width	12 mm
Weight	45.5 g
EMC immunity of interference	acc. to EN 61000-6-2, marine applications
EMC emission of interference	acc. to EN 61000-6-3, marine applications

Field Side Connection Module

24 V DC

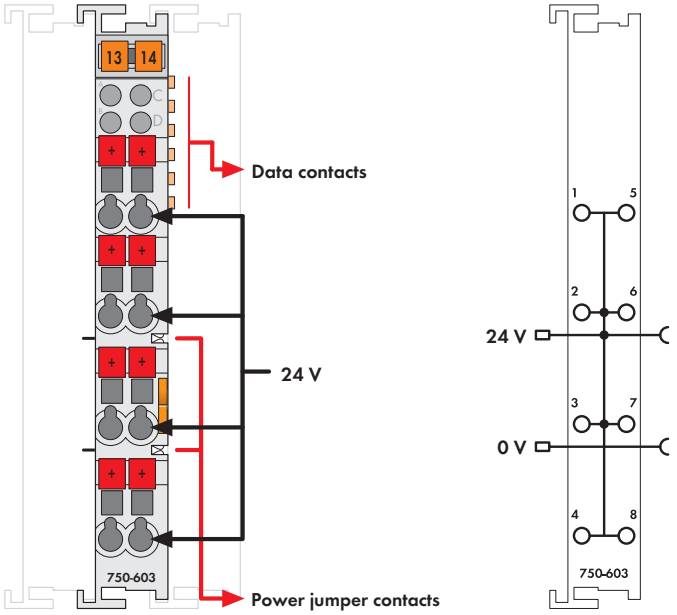

Fig. 750 Series
Delivered without miniature WSB markers

The field side connection module provides 24V power for the inputs of the 8-channel input module 750-430/-431,eliminating external terminal blocks.

The 24V supply and 0V potential are derived from the internal power jumper contacts of an adjacent upstream I/O module. A connection of the potentials to the downstream I/O modules is made automatically via the power jumper contacts when snapping the I/O modules together. The 24V power is available to all eight field side CAGE CLAMP® connections and the 0V potential is passed through without being used by the module.

Description	Item No.	Pack. Unit
Field Side Connection	**750-603**	1
Field Side Connection (without connector)	**753-603**	1

Accessories		Item No.	Pack. Unit
	753 Series Connectors	**753-110**	25
	Coding elements	**753-150**	100
	Miniature WSB Quick marking system		
	plain	**248-501**	5
	with marking	see Section 11	

Approvals

Conformity marking	CE
Korea Certification	
Marine applications	ABS, BV, DNV, GL, KR, LR, PRS, RINA
cULus UL 508	
cULus ANSI/ISA 12.12.01	Class I, Div. 2, Grp. ABCD, T4
TÜV 07 ATEX 554086 X	I M2 Ex d I Mb, II 3 G Ex nA IIC T4 Gc, II 3 D Ex tc IIIC T135°C Dc
IECEx TUN 09.0001 X	Ex d I Mb, Ex nA IIC T4 Gc, Ex tc IIIC T135°C Dc

Technical Data

Voltage via power jumper contacts (max.)	24 V DC
Current via power jumper contacts (max.)	10 A DC
Wire connection	CAGE CLAMP®
Cross sections	0.08 mm² ... 2.5 mm² / AWG 28 ... 14
Strip lengths, 750/753 Series	8 ... 9 mm / 0.33 in 9 ... 10 mm / 0.37 in
Width	12 mm
Weight	46.3 g
EMC immunity of interference	acc. to EN 61000-6-2, marine applications
EMC emission of interference	acc. to EN 61000-6-4, marine applications

Field Side Connection Module

0 V DC

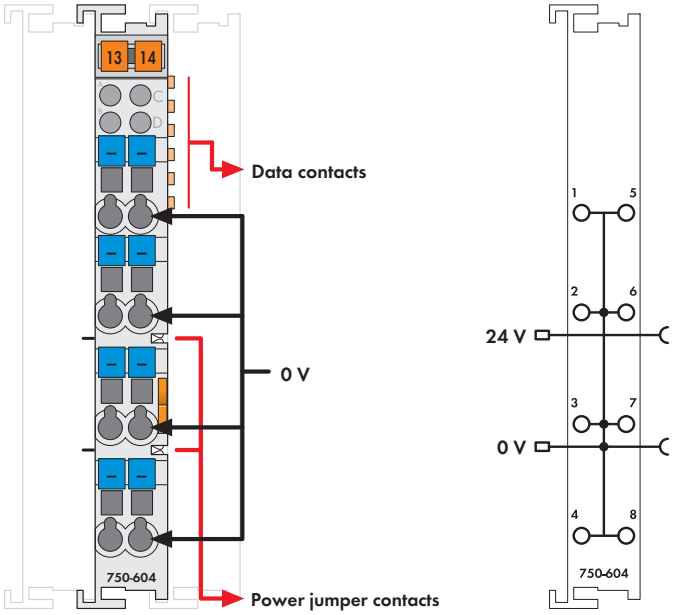

Fig. 750 Series
Delivered without miniature WSB markers

The field side connection module provides 0V potential for the outputs of the 8-channel output module 750-530, eliminating external terminal blocks.

The 24V supply and 0V potential are derived from the internal power jumper contacts of an adjacent upstream I/O module. A connection of the potentials to the downstream I/O modules is made automatically via the power jumper contacts when snapping the I/O modules together. The 0V potential is available to all eight field side CAGE CLAMP® connections and the 24V power is passed through without being used by the module.

Description	Item No.	Pack. Unit
Field Side Connection	**750-604**	1
Field Side Connection (without connector)	**753-604**	1

Accessories	Item No.	Pack. Unit
753 Series Connectors	**753-110**	25
Coding elements	**753-150**	100
Miniature WSB Quick marking system		
plain	**248-501**	5
with marking	see Section 11	

Approvals

Conformity marking	CE
Korea Certification	
Marine applications	ABS, BV, DNV, GL, KR, LR, PRS, RINA
UL 508	
ANSI/ISA 12.12.01	Class I, Div. 2, Grp. ABCD, T4
TÜV 07 ATEX 554086 X	I M2 Ex d I Mb, II 3 G Ex nA IIC T4 Gc, II 3 D Ex tc IIIC T135°C Dc
IECEx TUN 09.0001 X	Ex d I Mb, Ex nA IIC T4 Gc, Ex tc IIIC T135°C Dc

Technical Data

Voltage via power jumper contacts (max.)	24 V DC
Current via power jumper contacts (max.)	10 A DC
Wire connection	CAGE CLAMP®
Cross sections	0.08 mm² ... 2.5 mm² / AWG 28 ... 14
Strip lengths, 750/753 Series	8 ... 9 mm / 0.33 in 9 ... 10 mm / 0.37 in
Width	12 mm
Weight	46.3 g
EMC immunity of interference	acc. to EN 61000-6-2, marine applications
EMC emission of interference	acc. to EN 61000-6-4, marine applications

Field Side Connection Module 16+

24 V DC

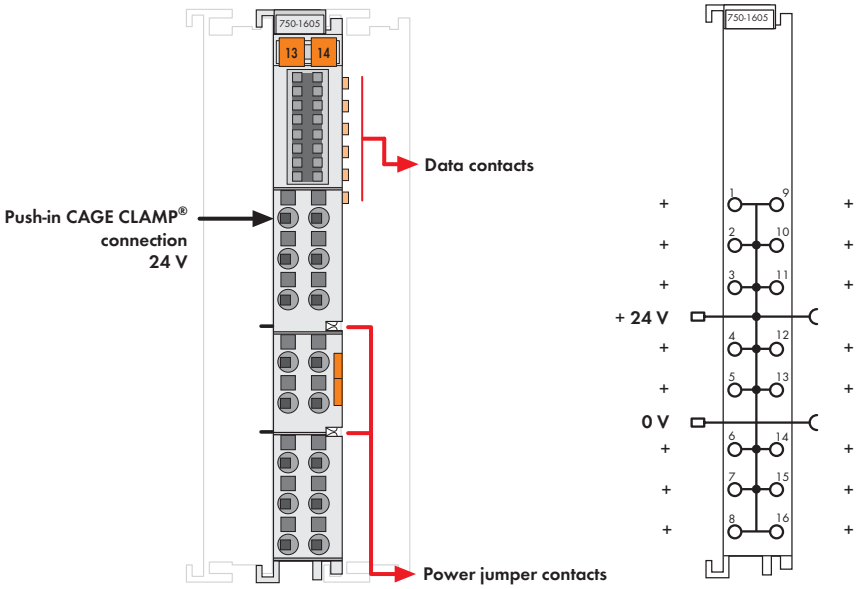

The field side connection module provides 24V power for the inputs of the 16-channel input modules 750-1405 and 750-1406 (also suitable for 8 channel input modules in 1-wire connection), eliminating external terminal blocks.

The 24V supply and 0V potential are derived from the internal power jumper contacts of an adjacent upstream I/O module. A connection of the potentials to the downstream I/O modules is made automatically via the power jumper contacts when snapping the I/O modules together. The 24V power is available to all 16 field side Push-in CAGE CLAMP® connections and the 0V potential is passed through without being used by the module.

210-719 operating tool (2.5mm blade) is required to open the Push-in CAGE CLAMP®.

Description	Item No.	Pack. Unit
Field Side Connection 16+	**750-1605**	1

Accessories		Item No.	Pack. Unit
Miniature WSB Quick marking system			
	plain	**248-501**	5
	with marking	see Section 11	
Operating tool, with partially insulated shaft, type 1, blade (2.5 x 0.4) mm		**210-719**	50

Approvals

Conformity marking	CE
Korea Certification	
Marine applications	ABS, BV, DNV, GL, KR, LR, NKK, PRS, RINA
cULus UL 508	
cULus ANSI/ISA 12.12.01	Class I, Div. 2, Grp. ABCD, T4
TÜV 07 ATEX 554086 X	I M2 Ex d I Mb, II 3 G Ex nA IIC T4 Gc, II 3 D Ex tc IIIC T135°C Dc
IECEx TUN 09.0001 X	Ex d I Mb, Ex nA IIC T4 Gc, Ex tc IIIC T135°C Dc

Technical Data

Voltage via power jumper contacts (max.)	24 V DC
Current via power jumper contacts (max.)	10 A DC
Wire connection	Push-in CAGE CLAMP®
Cross sections	solid: 0.08 mm² ... 1.5 mm² / AWG 28 ... 16 fine-stranded: 0.25 mm² ... 1.5 mm² / AWG 22 ... 16
Strip lengths	8 ... 9 mm / 0.33 in
Width	12 mm
Weight	48 g
EMC immunity of interference	acc. to EN 61000-6-2, marine applications
EMC emission of interference	acc. to EN 61000-6-3, marine applications

Field Side Connection Module 16-

0 V DC

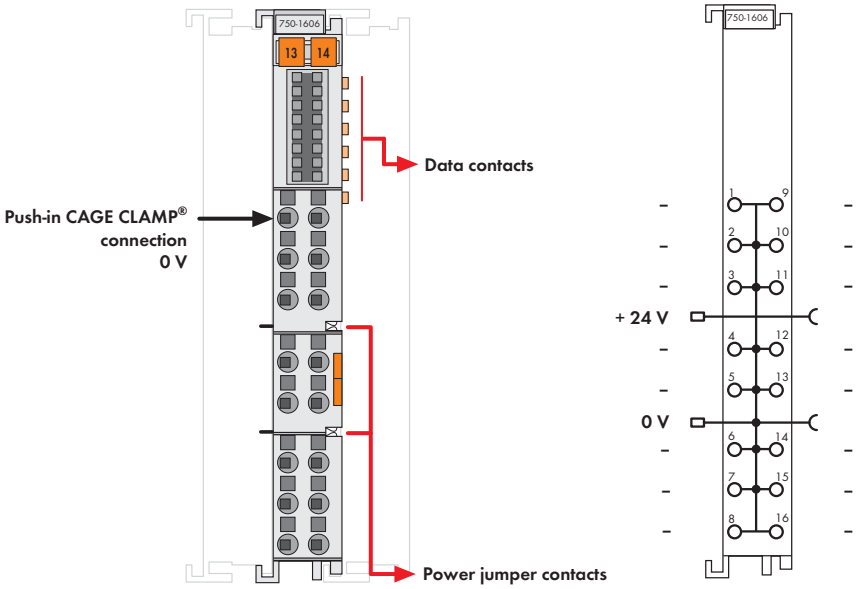

The field side connection module provides 0V potential for the outputs of the 16-channel output module 750-1504 (also suitable for 8 channel output modules in 1-wire connection), eliminating external terminal blocks.

The 24V supply and 0V potential are derived from the internal power jumper contacts of an adjacent upstream I/O module. A connection of the potentials to the downstream I/O modules is made automatically via the power jumper contacts when snapping the I/O modules together. The 0V potential is available to all 16 field side Push-in CAGE CLAMP® connections and the 24V power is passed through without being used by the module.

210-719 operating tool (2.5mm blade) is required to open the Push-in CAGE CLAMP®.

Description	Item No.	Pack. Unit
Field Side Connection 16-	**750-1606**	1

Accessories		Item No.	Pack. Unit
Miniature WSB Quick marking system			
	plain	**248-501**	5
	with marking	see Section 11	
Operating tool, with partially insulated shaft, type 1, blade (2.5 x 0.4) mm		**210-719**	50

Approvals

Conformity marking	CE
Korea Certification	
Marine applications	ABS, BV, DNV, GL, KR, LR, NKK, PRS, RINA
UL 508	
ANSI/ISA 12.12.01	Class I, Div. 2, Grp. ABCD, T4
TÜV 07 ATEX 554086 X	I M2 Ex d I Mb, II 3 G Ex nA IIC T4 Gc, II 3 D Ex tc IIIC T135°C Dc
IECEx TUN 09.0001 X	Ex d I Mb, Ex nA IIC T4 Gc, Ex tc IIIC T135°C Dc

Technical Data

Voltage via power jumper contacts (max.)	24 V DC
Current via power jumper contacts (max.)	10 A DC
Wire connection	Push-in CAGE CLAMP®
Cross sections	solid: 0.08 mm² ... 1.5 mm² / AWG 28 ... 16 fine-stranded: 0.25 mm² ... 1.5 mm² / AWG 22 ... 16
Strip lengths	8 ... 9 mm / 0.33 in
Width	12 mm
Weight	45 g
EMC immunity of interference	acc. to EN 61000-6-2, marine applications
EMC emission of interference	acc. to EN 61000-6-3, marine applications

Field Side Connection Module 8+/8-

24 V / 0 V DC

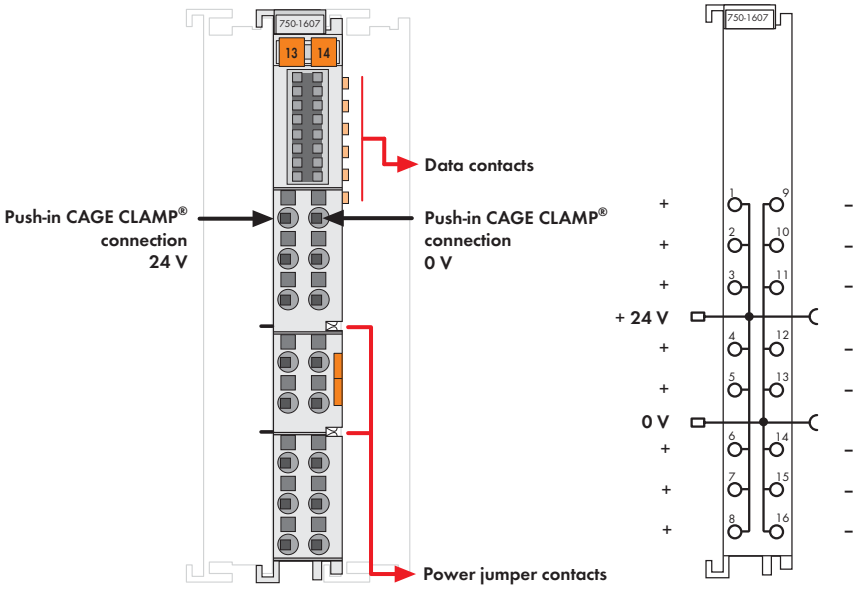

The field side connection module provides 24 V and 0 V power for the inputs and outputs of the 8-channel input/output module 750-1506 (also suitable for 8-channel I/O modules, 1-wire connection) eliminating external terminal blocks.
The 24V supply and 0V potential are derived from the internal power jumper contacts of an adjacent upstream I/O module. A connection of the potentials to the downstream I/O modules is made automatically via the power jumper contacts when snapping the I/O modules together.
The 24 V and 0 V power is available to all eight filed side Push-in CAGE CLAMP® connections.

210-719 operating tool (2.5mm blade) is required to open the Push-in CAGE CLAMP®.

Description	Item No.	Pack. Unit
Field Side Connection 8+/8-	**750-1607**	1

Accessories		Item No.	Pack. Unit
Miniature WSB Quick marking system			
	plain	**248-501**	5
	with marking	see Section 11	
Operating tool, with partially insulated shaft, type 1, blade (2.5 x 0.4) mm		**210-719**	50

Approvals

Conformity marking	CE
Korea Certification	
Marine applications	ABS, BV, DNV, GL, KR, LR, NKK, PRS, RINA
cULus UL 508	
cULus ANSI/ISA 12.12.01	Class I, Div. 2, Grp. ABCD, T4
TÜV 07 ATEX 554086 X	I M2 Ex d I Mb, II 3 G Ex nA IIC T4 Gc, II 3 D Ex tc IIIC T135°C Dc
IECEx TUN 09.0001 X	Ex d I Mb, Ex nA IIC T4 Gc, Ex tc IIIC T135°C Dc

Technical Data

Voltage via power jumper contacts (max.)	24 V DC
Current via power jumper contacts (max.)	10 A DC
Wire connection	Push-in CAGE CLAMP®
Cross sections	solid: 0.08 mm² ... 1.5 mm² / AWG 28 ... 16 fine-stranded: 0.25 mm² ... 1.5 mm² / AWG 22 ... 16
Strip lengths	8 ... 9 mm / 0.33 in
Width	12 mm
Weight	48 g
EMC immunity of interference	acc. to EN 61000-6-2, marine applications
EMC emission of interference	acc. to EN 61000-6-3, marine applications

Filtermodul

for field side power supply

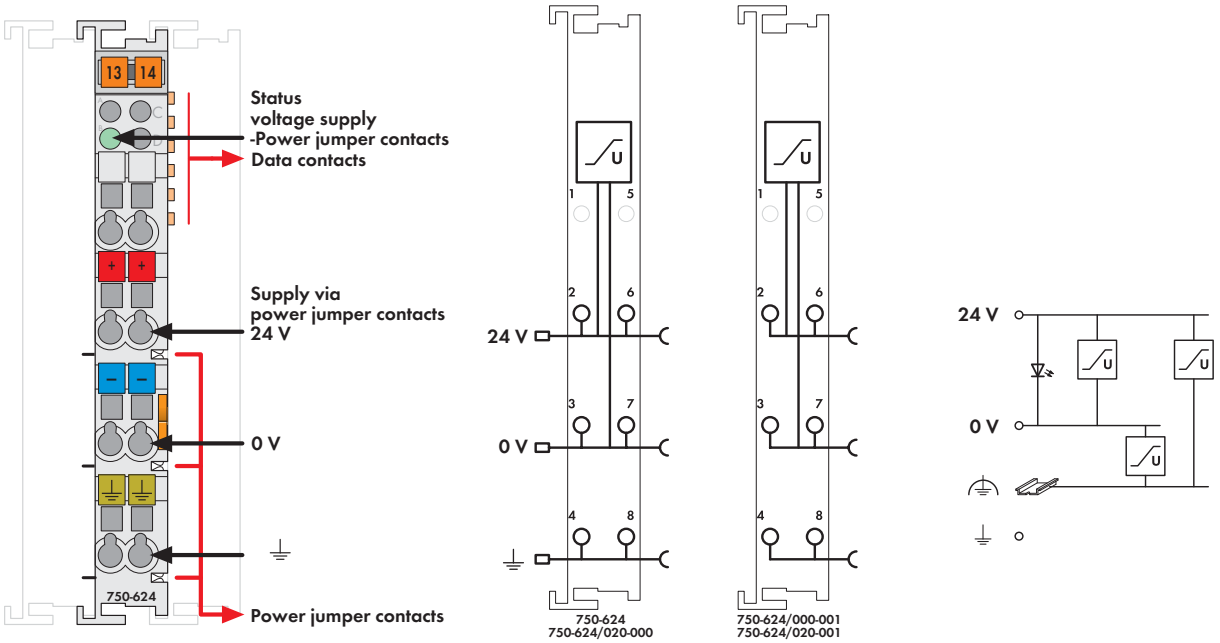

Delivered without miniature WSB markers

The WAGO-I/O-SYSTEM 750 can also be used in shipbuilding applications and onshore/offshore installations (e.g., platforms, loading facilities). This is possible via certification under the standards of leading agencies such as Germanischer Lloyd and Lloyds Register. This module ensures proper (certified) system operation and is equipped with surge suppression for 24VDC field side power supply.
High-insulation versions are optimized for use in systems with insulation monitoring.

750-624/020-000, 750-624/020-001

- Required for shipbuilding certified operation with 750 Series I/O modules.
- 750-624/020-001 may also be used as a supply module.

750-624, 750-624/000-001

- Required for shipbuilding certified operation with 750-625 Ex i supply module.
- Required for the use of 750 Series PROFIsafe modules.
- 750-624/000-001 may also be used as a supply module.

Description	Item No.	Pack. Unit
24V DC Field Side Power Supply Filter with Overvoltage (Surge) Protection, High Isolation	**750-624/020-000**	1
24V DC Field Side Power Supply Filter with Overvoltage (Surge) Protection, High Isolation / without Power Jumper Contacts	**750-624/020-001**	1
24V DC Field Side Power Supply Filter with Overvoltage (Surge) Protection	**750-624**	1
24V DC Field Side Power Supply Filter with Overvoltage (Surge) Protection / without Power Jumper Contacts	**750-624/000-001**	1

Accessories		Item No.	Pack. Unit
Miniature WSB Quick marking system			
	plain	**248-501**	5
	with marking	see Section 11	

Approvals

Conformity marking	CE
Korea Certification	
Marine applications (versions upon request)	ABS, BV, DNV, GL, KR, LR, NKK, PRS, RINA
UL 508	
ANSI/ISA 12.12.01	Class I, Div. 2, Grp. ABCD, T4
TÜV 07 ATEX 554086 X	I M2 Ex d I Mb, II 3 G Ex nA IIC T4 Gc, II 3 D Ex tc IIIC T135°C Dc
IECEx TUN 09.0001 X	Ex d I Mb, Ex nA IIC T4 Gc, Ex tc IIIC T135°C Dc

Technical Data	
Voltage via power jumper contacts (max.)	24 V DC (-25 % ... +30 %)
Current via power jumper contacts (max.)	10 A DC
Wire connection	CAGE CLAMP®
Cross sections	0.08 mm² ... 2.5 mm² / AWG 28 ... 14
Strip lengths	8 ... 9 mm / 0.33 in
Width	12 mm
Weight	51 g
EMC immunity of interference	acc. to EN 61000-6-2, marine applications
EMC emission of interference	acc. to EN 61000-6-3, marine applications

Filter Module

for system and field side power supply

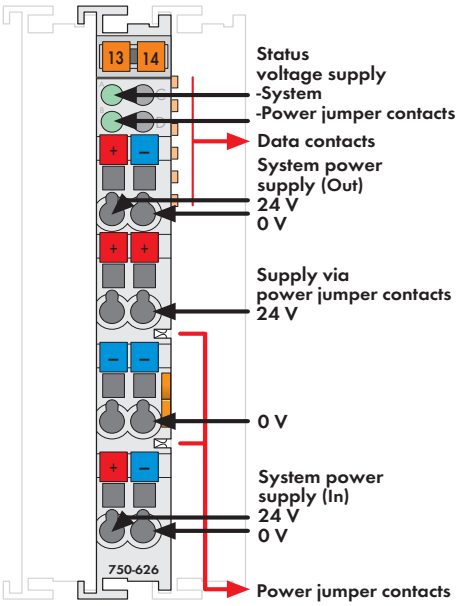

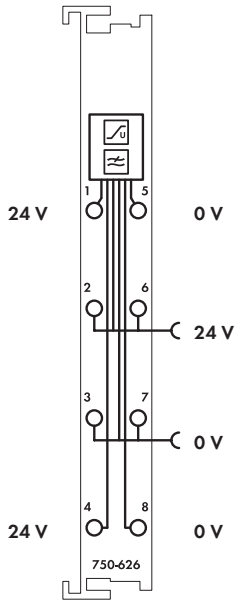

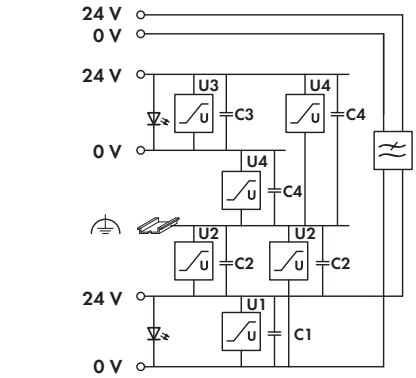

750-626, 750-626/025-000: Voltage limitation
U1= U2=U3=U4= 39V, C1=C2=20µF, C3=C4=10µF
750-626/020-000, 750-626/025-001: Voltage limitation
U1=U3=39V, U2=U4=150V, C1=20µF, C2=C4=10nF, C3=10µF

Delivered without miniature WSB markers

The WAGO-I/O-SYSTEM 750 can also be used in shipbuilding applications and onshore/offshore installations (e.g., platforms, loading facilities). This is possible via certification under the standards of leading agencies such as Germanischer Lloyd and Lloyds Register. Proper system operation is ensured (certified) by using this overvoltage protection module. The module filters the 24V system power supply and is equipped with surge suppression. High-insulation versions are optimized for use in systems with insulation monitoring.

750-626/020-000
- Required for shipbuilding certified operation with both 750 Series couplers and programmable controllers.

750-626
- Required for shipbuilding certified operation with both 758 Series IPCs and 750-625 Ex-i supply module.
- Required for the use of 750 Series PROFIsafe modules.

Description	Item No.	Pack. Unit
24V DC Power Supply Filter with Overvoltage (Surge) Protection, High Isolation	**750-626/020-000**	1
24V DC Power Supply Filter with Overvoltage (Surge) Protection /HI /T	**750-626/025-001**	1
Extended temperature range: -20 °C ... +60 °C		
24V DC Power Supply Filter with Overvoltage (Surge) Protection	**750-626**	1
24V DC Power Supply Filter with Overvoltage (Surge) Protection /T	**750-626/025-000**	1
Extended temperature range: -20 °C ... +60 °C		

Accessories		Item No.	Pack. Unit
Miniature WSB Quick marking system			
	plain	**248-501**	5
	with marking	see Section 11	

Approvals

Conformity marking	CE
Korea Certification	[1]
Marine applications (versions upon request)	ABS, BV, DNV, GL, KR, LR, NKK, PRS, RINA
cULus UL 508	
cULus ANSI/ISA 12.12.01	Class I, Div. 2, Grp. ABCD, T4
TÜV 07 ATEX 554086 X	I M2 Ex d I Mb, II 3 G Ex nA IIC T4 Gc, II 3 D Ex tc IIIC T135°C Dc
IECEx TUN 09.0001 X	Ex d I Mb, Ex nA IIC T4 Gc, Ex tc IIIC T135°C Dc

[1] Does not apply to 750-626/025-001

Technical Data

Voltage via power jumper contacts (max.)	24 V DC (-25 % ... +30 %)
Current via power jumper contacts (max.)	10 A DC
Current via system voltage (max.)	1.5 A (1 A up to hardware 04)
Wire connection	CAGE CLAMP®
Cross sections	0.08 mm² ... 2.5 mm² / AWG 28 ... 14
Strip lengths	8 ... 9 mm / 0.33 in
Width	12 mm
Weight	51 g
EMC immunity of interference	acc. to EN 61000-6-2, marine applications
EMC emission of interference	acc. to EN 61000-6-3, marine applications

Internal Data Bus Extension End Module

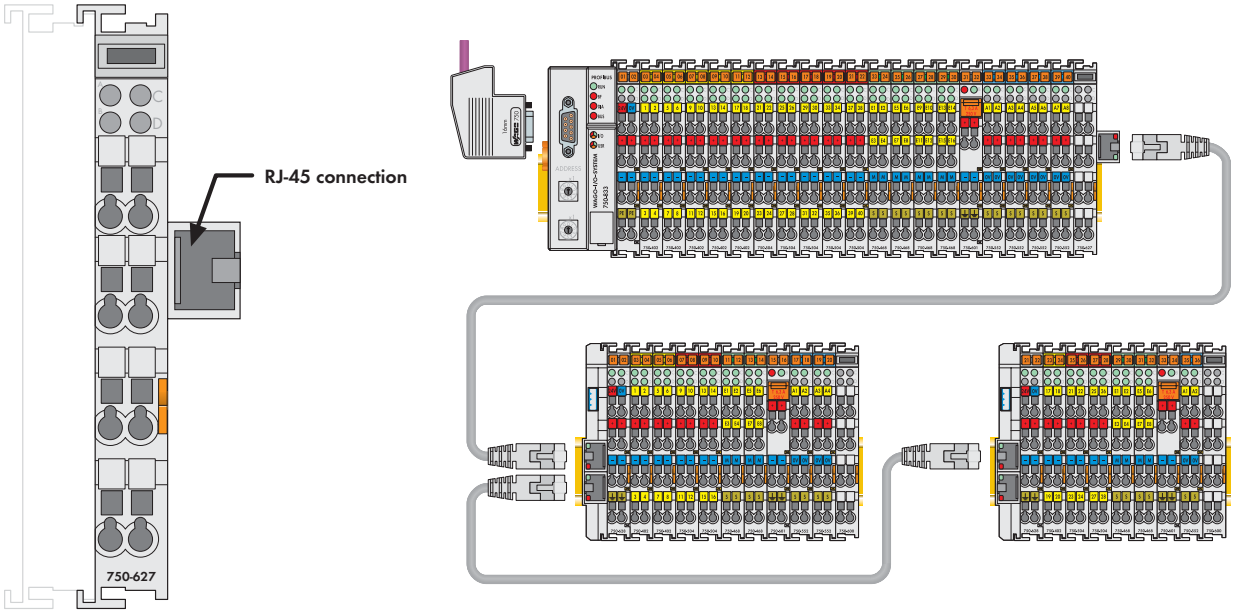

Delivered without miniature WSB markers

The end module for the internal data bus extension 750-627 is attached to the end of the I/O terminal block like the standard end module 750-600. The block is terminated with the module, to which a connecting cable can be attached with an RJ-45 connector.
Power to the internal electronics is supplied via the internal bus. Together with at least one coupler module for the internal data bus extension 750-628 the module forms a functional unit. The fieldbus coupler/controller carries out all diagnosis and commissioning tasks.

Installation note Attention:
To ensure safe, reliable operating states when using the internal data bus extension 750-627/-628 these states must be registered prior to startup with the following couplers or PLCs (refer to manual for supported couplers/PLCs). You must use the "WAGO Extension Setting" software for this (download: www.wago.com).
Please complete the manufacturing number matrix on the right-hand side of the couplers when updating the firmware and internal operating parameters.

Description	Item No.	Pack. Unit
Internal Data Bus Extension End Module	**750-627**	1

Accessories	Item No.	Pack. Unit
Software "WAGO Extension Setting"	Download: www.wago.com	
Communication cable (used to register or remove the end extension module)	**750-920**	10
Miniature WSB Quick marking system		
plain	**248-501**	5
with marking	see Section 11	

Approvals

Conformity marking	CE
Korea Certification	
Marine applications	BV, GL
UL 508	
DEKRA 11 ATEX 0203 X	II 3 G Ex nA II T4

Technical Data

Max. no. of coupler modules	up to 10
Max. current consumption (internal)	70 mA
Buscoupler connection	1 x RJ-45 socket
Distance	max. 5 m (end module and coupler module)
Transmission medium	shielded copper wire (ETHERNET patch cable) 4 x 2 x 0.25 mm², twisted pair, double shielding
Isolation	500 V system/supply
Wire connection	CAGE CLAMP®
Cross sections	0.08 mm² ... 2.5 mm² / AWG 28 ... 14
Strip lengths	8 ... 9 mm / 0.33 in
Width	24 mm
Weight	45.1 g
EMC immunity of interference	acc. to EN 61000-6-2, marine applications
EMC emission of interference	acc. to EN 61000-6-4, marine applications

Internal Data Bus Extension Coupler Module

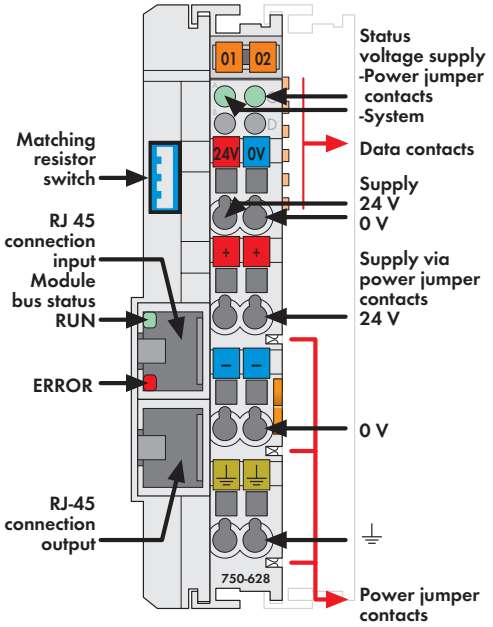

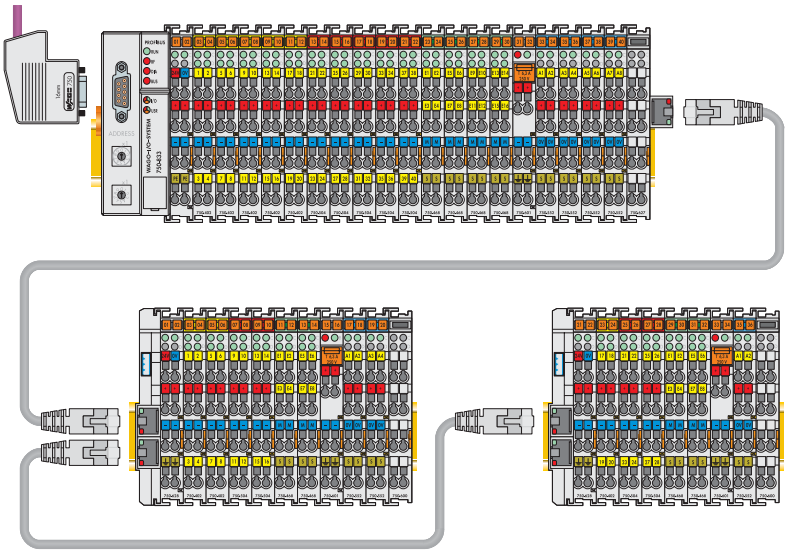

Delivered without miniature WSB markers

The coupler module for the internal data bus extension module 750-628 replaces the fieldbus coupler/controller at an I/O terminal block. It is also the mating piece for the end module 750-627. Plug the connecting cable into the top RJ-45 socket to establish the logical link to the fieldbus coupler/controller via end module 750-627. The extension is completely transparent for the fieldbus coupler/controller. All of the functions of the I/O module system are retained without any changes. A further extension to the system is provided by the bottom RJ-45 socket. This enables the entire system to be extended by 10 stages.
The supply voltage for the field side and the internal electronics can be input separately. Both levels are electrically isolated from each other. Two diagnostic LEDs give information about the supply voltage for both the internal and field side. Two LEDs in the input socket indicate fault-free communication with the bus coupler.
The extension module can be used as the last coupler module in the system (switch on matching resistor) or as a bridge between two I/O module assemblies.

Installation note Attention:
To ensure safe, reliable operating states when using the internal data bus extension 750-627/-628 these states must be registered prior to startup with the following couplers or PLCs (refer to manual for supported couplers/PLCs). You must use the "WAGO Extension Setting" software for this (download: www.wago.com).
Please note that only one terminating resistor may be activated in the whole system.
Please complete the manufacturing number matrix on the right-hand side of the couplers when updating the firmware and internal operating parameters.

Description	Item No.	Pack. Unit
Internal Data Bus Extension Coupler Module	**750-628**	1

Accessories		Item No.	Pack. Unit
Miniature WSB Quick marking system			
	plain	**248-501**	5
	with marking	see Section 11	

Approvals

Conformity marking	CE
Korea Certification	
Marine applications	BV, GL
UL 508	
DEKRA 11 ATEX 0203 X	II 3 G Ex nA II T4

Technical Data

Max. no. of I/O modules	64 (in the whole system)
Buscoupler connection	2 x RJ-45 socket (input + output)
Distance	5 m (10 m see manual), (end module and coupler or coupler and coupler)
Transmission medium	shielded copper wire (ETHERNET patch cable) 4 x 2 x 0.25 mm², twisted pair, double shielding
Power supply	24 V DC (-15 % ... +20 %)
Max. input current (24 V)	200 mA
Power supply efficiency	76 %
Inrush current	2.5 x continuous current
Internal current consumption (5 V)	150 mA
Total current for I/O modules (5 V)	400 mA
Voltage via power jumper contacts	24 V DC (-15 % ... +20 %)
Current via power jumper contacts (max.)	10 A DC
Isolation	500 V system/supply
Wire connection	CAGE CLAMP®
Cross sections	0.08 mm² ... 2.5 mm² / AWG 28 ... 14
Strip lengths	8 ... 9 mm / 0.33 in
Width	25 mm
Weight	75.2 g
EMC immunity of interference	acc. to EN 61000-6-2, marine applications
EMC emission of interference	acc. to EN 61000-6-4, marine applications

Binary Spacer Module

with supply module

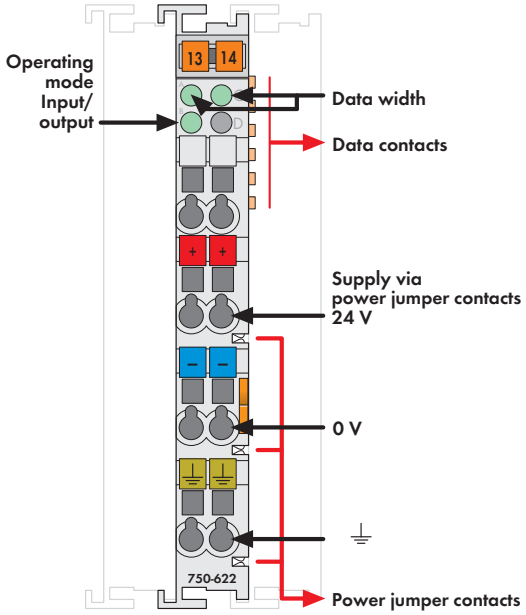

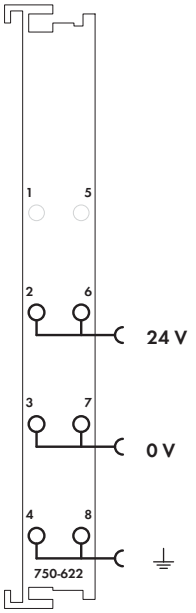

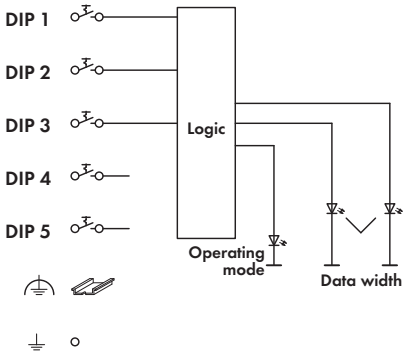

Delivered without miniature WSB markers

The binary spacer module reserves bit addresses in the process image of a fieldbus node.

The operating mode as well as the bit width can be adjusted by DIP switches on the side of the module. The operating mode (inputs/outputs) can be chosen by one DIP switch, the number of inputs or outputs (2, 4, 6 or 8) can be chosen by two DIP switches.

The configuration is indicated by means of 3 LEDs.

The binary spacer module can also act as a power supply module, providing a voltage of 24V via the power jumper contacts.

Description	Item No.	Pack. Unit
Binary Spacer Module	**750-622**	1

Accessories		Item No.	Pack. Unit
Miniature WSB Quick marking system			
	plain	**248-501**	5
	with marking	see Section 11	

Approvals

Conformity marking	CE
UL 508	
ANSI/ISA 12.12.01	Class I, Div. 2, Grp. ABCD, T4
TÜV 07 ATEX 554086 X	I M2 Ex d I Mb,
	II 3 G Ex nA IIC T4 Gc,
	II 3 D Ex tc IIIC T135°C Dc
IECEx TUN 09.0001 X	Ex d I Mb,
	Ex nA IIC T4 Gc,
	Ex tc IIIC T135°C Dc

Technical Data

Voltage via power jumper contacts (max.)	24 V DC (-15 % ... +20 %)
Current via power jumper contacts (max.)	10 A DC
Current consumption (internal)	10 mA
Isolation	500 V system/supply
Internal bit width	2, 4, 6 or 8 Bit
Bit width	2 Bit: DIP1: OFF/DIP2: OFF;
	4 Bit: DIP1: ON/DIP2: OFF ;
	6 Bit: DIP1: OFF/DIP2: ON ;
	8 Bit DIP1: ON/DIP2: ON
Operating mode	Inputs DIP 3 OFF ;
	Outputs DIP 3 ON
Wire connection	CAGE CLAMP®
Cross sections	0.08 mm² ... 2.5 mm² / AWG 28 ... 14
Strip lengths	8 ... 9 mm / 0.33 in
Width	12 mm
Weight	48 g
EMC immunity of interference	acc. to EN 61000-6-2
EMC emission of interference	acc. to EN 61000-6-4

Spacer Module

active

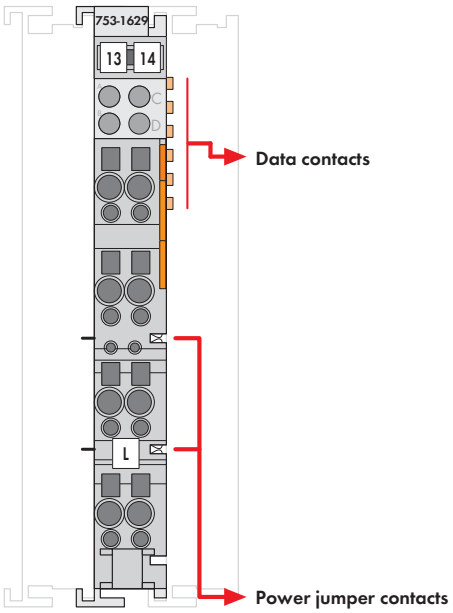

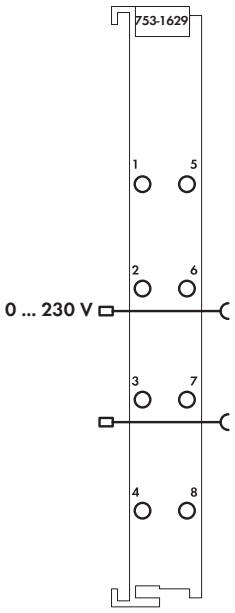

Active spacer modules provide both hardware and software space reservation for standard function modules (digital/analog) in PROFIBUS networks (only in connection with 750-333 coupler).

753 Series pluggable connectors enable the use of pre-wired cable assemblies.
WAGO's spacer modules also simulate a function module and are configured accordingly (select module “optionally not plugged”).

Subsequent node expansion is made possible by replacing spacer modules with function modules without disturbing existing wiring or configuration.

These modules are available with and without power jumper contacts for power supply to downstream modules.

Description	Item No.	Pack. Unit
Spacer module, active (without connector)	**753-1629**	1
Spacer module, active/without power jumper contacts (without connector)	**753-1629/000-001**	1

Accessories		Item No.	Pack. Unit
	753 Series Connectors	**753-110**	25
	Coding elements	**753-150**	100
	Miniature WSB Quick marking system		
	plain	**248-501**	5
	with marking	see Section 11	

Approvals

Conformity marking CE
UL 508

Technical Data	
Voltage via power jumper contacts (max.)	0 ... 230 V AC/DC
Wire connection	CAGE CLAMP®
Cross sections	0.08 mm² ... 2.5 mm² / AWG 28 ... 14
Strip lengths	9 ... 10 mm / 0.37 in
Width	12 mm
Weight	61 g

Spacer Module

passive

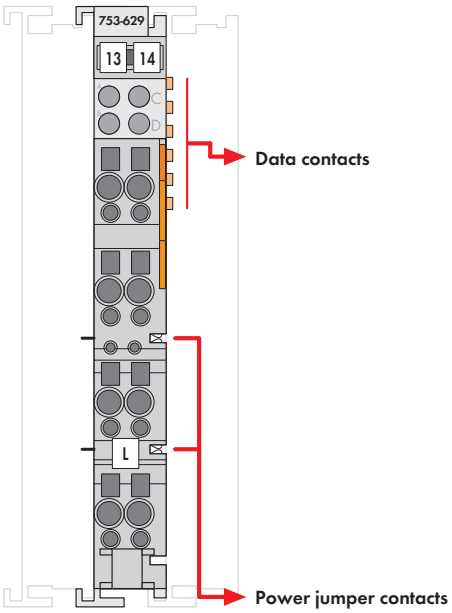

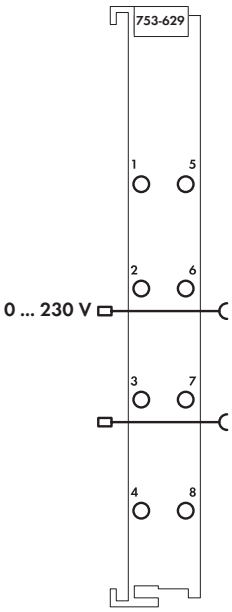

WAGO's passive spacer modules provide hardware place reservation for standard function modules (digital/analog).

753 Series pluggable connectors enable the use of pre-wired cable assemblies.
Subsequent node expansion is made possible by replacing spacer modules with corresponding function modules without disturbing existing wiring.
The modules can also accommodate cables that are currently unused.

The passive spacer modules have no electronics.
They do not reserve any bits/bytes in the process image and are therefore not shown in the configuration.

The modules feature two power jumper contacts for power supply to downstream modules.

Description	Item No.	Pack. Unit
Spacer module, passive (without connector)	**753-629/020-000**	1

Accessories		Item No.	Pack. Unit
	753 Series Connectors	**753-110**	25
	Coding elements	**753-150**	100
	Miniature WSB Quick marking system		
	plain	**248-501**	5
	with marking	see Section 11	

Approvals

Conformity marking	CE
cULus UL 508	

Technical Data

Voltage via power jumper contacts (max.)	0 ... 230 V AC/DC
Wire connection	CAGE CLAMP®
Cross sections	0.08 mm² ... 2.5 mm² / AWG 28 ... 14
Strip lengths	9 ... 10 mm / 0.37 in
Width	12 mm
Weight	29.2 g

Separation Module

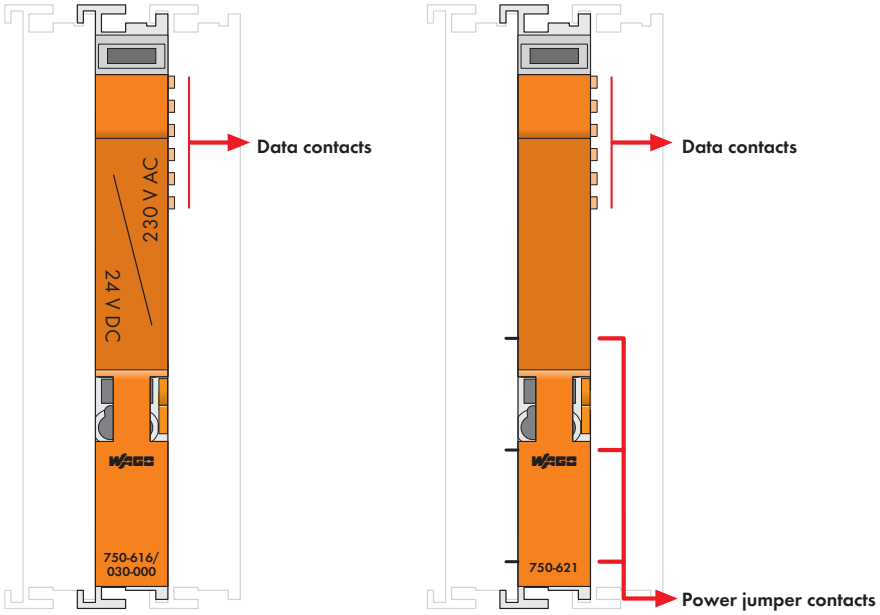

A separation module visually divides a fieldbus node into sections.

The 750-616 Separation Module has no power jumper contacts. A separation module with printing on its face has got the item no. 750-616/030-000.

Note:
Operation of the adjacent I/O modules requires a supply module.

The 750-621 Separation Module has power jumper contacts that can supply the power to adjacent bus modules.

Description	Item No.	Pack. Unit
Separation Module	**750-616**	1
Separation Module/ 24V DC/ 230V AC	**750-616/030-000**	1
Separation Module with Contacts	**750-621**	1

Accessories		Item No.	Pack. Unit
Miniature WSB Quick marking system			
	plain	**248-501**	5
	with marking	see Section 11	

Approvals

Conformity marking	CE
Korea Certification	
Marine applications (versions upon request)[1]	ABS, BV, DNV, GL, KR, LR, NKK, PRS, RINA
cULus UL 508	
cULus ANSI/ISA 12.12.01	Class I, Div. 2, Grp. ABCD, T4
TÜV 07 ATEX 554086 X	I M2 Ex d I Mb,
	II 3 G Ex nA IIC T4 Gc,
	II 3 D Ex tc IIIC T135°C Dc
IECEx TUN 09.0001 X	Ex d I Mb,
	Ex nA IIC T4 Gc,
	Ex tc IIIC T135°C Dc

[1] Does not apply to 750-621

Technical Data	
Width	12 mm
Weight	38.9 g
EMC immunity of interference	acc. to EN 61000-6-2, marine applications
EMC emission of interference	acc. to EN 61000-6-4, marine applications

End Module

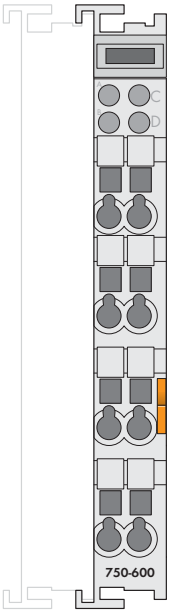

After the fieldbus node is assembled with the correct buscoupler and selected I/O modules, the end module is snapped onto the assembly.

It completes the internal data circuit and ensures correct data flow.

Description	Item No.	Pack. Unit
End Module	**750-600**	1
End Module/T	**750-600/025-000**	1
Extended temperature range: -20 °C ... +60 °C		

Accessories		Item No.	Pack. Unit
Miniature WSB Quick marking system			
	plain	**248-501**	5
	with marking	see Section 11	

Approvals

Conformity marking	CE
Korea Certification	
Marine applications	ABS, BV, DNV, GL, KR, LR, NKK, PRS, RINA
UL 508	
ANSI/ISA 12.12.01	Class I, Div. 2, Grp. ABCD, T4
TÜV 07 ATEX 554086 X	I M2 Ex d I Mb, II 3 G Ex nA IIC T4 Gc, II 3 D Ex tc IIIC T135°C Dc
IECEx TUN 09.0001 X	Ex d I Mb, Ex nA IIC T4 Gc, Ex tc IIIC T135°C Dc

Technical Data

Width	12 mm
Weight	46.4 g
EMC immunity of interference	acc. to EN 61000-6-2, marine applications
EMC emission of interference	acc. to EN 61000-6-4, marine applications

I/O-System – 750 XTR Series

◄ Section 4

I/O-System – 750 and 753 Series

- Highly versatile
- More than 500 modules available
- Functional Safety
- Ex i

I/O-System – 750 XTR Series

For demanding applications where the following are critical:

- Extreme temperature stability
- Immunity to interference and dielectric strength
- Vibration and shock resistance

Section 6 ►

I/O-System – *SPEEDWAY*

- Uncompromising protection, even in the harshest environments outside the control cabinet
- Degree of protection: IP67
- Fully encapsulated

	Page
General Product Information	394
Item Number Keys	395
Interfaces and Configurations	396
Application and Installation Instructions	397
Standards and Rated Conditions	398

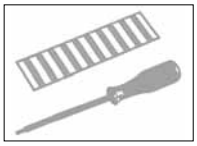

	Description	Item No.	Page
Programmable Fieldbus Controllers	ETHERNET Controller/XTR	750-880/040-000	112
	ETHERNET Telecontroller/XTR	750-880/040-001	112
	CANopen Controller/XTR	750-838/040-000	114
Fieldbus Couplers	PROFIBUS DP/V1 12 Mbd/XTR	750-333/040-000	400
	ETHERNET/XTR	750-352/040-000	402
	CANopen D-Sub/XTR	750-338/040-000	404
Digital Input Modules	8DI 24 VDC 3.0ms, 2-wire connection/XTR	750-1415/040-000	406
	16DI 24 VDC 3.0ms/XTR	750-1405/040-000	406
	2DI 220 VDC 3.0ms/XTR	750-407/040-000	408
Digital Output Modules	2DO 24 VDC 2.0A/Diagnostics/XTR	750-508/040-000	409
	8DO 24 VDC 0.5A, 2-wire connection/XTR	750-1515/040-000	410
	2DO 230 VAC 1.0A/Relay 2CO/potential-free/XTR	750-517/040-000	411
Analog Input Modules	4AI 0 – 20mA S.E./XTR	750-453/040-000	412
	4AI 4 – 20mA S.E./XTR	750-455/040-000	412
	4AI 0 – 10 VDC S.E./XTR	750-468/040-000	413
	4AI ±10 VDC S.E./XTR	750-457/040-000	414
	2/4 AI RTD configurable/XTR	750-464/040-000	415
	2AI Thermocouple/configurable/XTR	750-469/040-000	416
Analog Output Modules	2AO 0/4–20mA/6–18 VDC/configurable/XTR	750-563/040-000	417
	4AO ±10 VDC/XTR	750-557/040-000	418
	4AO 0 – 10 VDC/XTR	750-559/040-000	418
Communication Modules	RS-232/RS-485 freely configurable/XTR	750-652/040-000	419
Supply and Segment Modules	24 VDC Power Supply/XTR	750-602/040-000	420
	AC/DC Power Supply, 0–230 V/XTR	750-612/040-000	421
	24 VDC Bus Power Supply	750-613/040-000	422
	24 VDC Field-Side Power Supply Filter with Overvoltage (Surge) Protection/XTR	750-624/040-001	423
	24 VDC Power Supply Filter with Overvoltage (Surge) Protection/XTR	750-626/040-000	424
	Field-Side Connection Module 16+/XTR	750-1605/040-000	425
	Field-Side Connection Module 16-/XTR	750-1606/040-000	426
	End Module/XTR	750-600/040-000	427
Accessories			
Marking and mounting accessories			Section 11

I/O-System – 750 XTR Series
General Product Information

Taking it to the eXTReme – The standard for 750 XTR
The WAGO-I/O-SYSTEM 750 XTR is readily recognizable by its dark gray modules. Benefit from the unique features offered by this system in extreme environment applications.

The WAGO-I/O-SYSTEM 750 XTR features outstanding characteristics: It is extremely temperature-resistant, immune to interferences, as well as insensitive to vibrations and impulse voltages. This is what makes 750 XTR the first choice for demanding applications, including:
- Marine systems and onshore/offshore installations
- Renewable energy systems (wind, photovoltaic and biogas plants)
- Transformer stations and power distribution
- Petrochemical industry
- Water and wastewater treatment systems
- Custom machine engineering
- Railway applications

Superior reliability in extreme climates
Automation systems are increasingly being located in outdoor and remote locations where components are directly affected by widely fluctuating temperatures conditions (e.g., wind turbines and transformer stations).
Whether freezing cold, extreme heat or high humidity, the WAGO-I/O-SYSTEM 750 XTR is engineered for absolute dependability in all climatic conditions. This robust XTR version of the WAGO-I/O-SYSTEM 750 is unfazed by both freezing cold down to -40 °C and scorching heat up to +70 °C. And this applies to both initial start-up and daily operation.
Another highlight is that the 750 XTR functions at elevations up to 5,000 m, opening up these applications to new highs for safety, reliability and performance – even in the thin air of a mountain top station.

eXTReme evolution of the tried and tested
Using an industry-leading platform, the WAGO-I/O-SYSTEM 750 XTR boasts the same proven benefits:
- Compact design: up to 16 channels in just one 12 mm module
- Easy to use
- CAGE CLAMP® spring connection technology for vibration-proof, fast and maintenance-free connections
- Fieldbus independence due to its modular design
- Clear identification with the WAGO WSB marking system

Additional protection against interference pulses
The WAGO-I/O-SYSTEM 750 XTR provides greater isolation up to 5 kV of impulse voltage, lower EMC emission of interference and higher insensitivity against EMC interference. These strengths add up to trouble-free operation.

High mechanical performance
Automation systems must be particularly vibration-resistant, especially when installed close to vibration-prone and shock-generating system components. Powerful motors and power circuit breakers are just two examples of common disturbance-creating components. The WAGO-I/O-SYSTEM 750 XTR is also setting new standards for automation systems with 5g of vibration resistance according to DIN EN 60068-2-6 (acceleration: 50 m/s²) and 15g (150 m/s²) or 25g (250 m/s²) of continuous shock resistance according to IEC 60068-2-27.
Count on long-lasting, trouble-free operation and industry-topping levels of safety – even in the most torturous applications, such as a tunnel boring machines.

Worldwide approvals
International approvals for industrial automation, shipbuilding and onshore/offshore applications guarantee worldwide use even under the harshest operating conditions, e.g., Germanischer Lloyd, Det Norske Veritas, American Bureau of Shipping, Korean Register of Shipping, Nippon Kaiji Kyokai, Registro Italiano Navale and Polski Rejestr Stratkow.

- No air conditioning required
  - Compact footprint
  - Lower energy and maintenance costs
- Can be used in unshielded areas
- Maximum system uptime
- Install close to vibrating and shock-generating system components
- CAGE CLAMP® connection technology for vibration-proof, fast and maintenance-free connection

Explanation of the components for the item number key

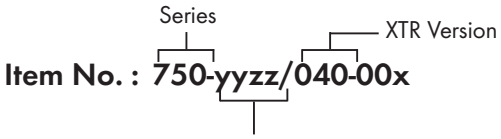

01zz: Marker
03zz: Fieldbus Coupler
zz: consecutive number

1yzz: 16 connection points or ribbon cables
y4zz: Input
00 ... 49 = Digital input
50 ... 99 = Analog input

y5zz: Output
00 ... 49 = Digital output
50 ... 99 = Analog input

y6zz: Communication/system modules
0z: Power supply, potential duplication, end module
1z: Power supply, separation module
2z: Filter
5z: Serial interface

09zz: Accessories

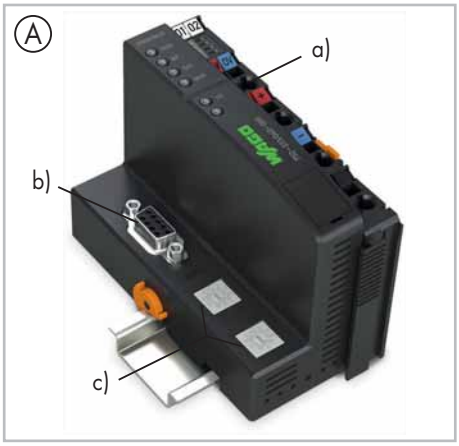

Housing design fieldbus coupler (A)
- Including supply module (a) to power downstream I/O modules
- Technical differences on the connection level. Fieldbus interface (b) and optional address switch (c)
- W x H* x L (mm) 51 x 65 x 100

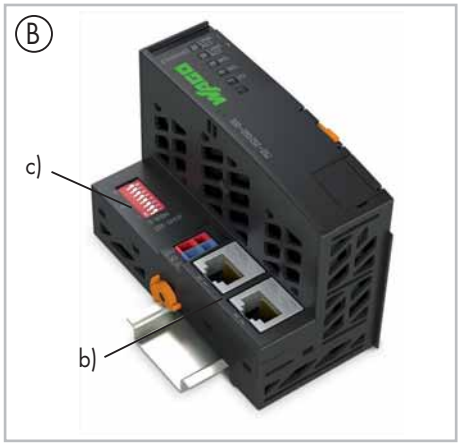

Housing design fieldbus coupler ECO (B)
- Constraint in regards to power supply and data width
- W x H* x L (mm) 50 x 65 x 97

Housing design 750 (C)
- 8 connecting terminals (CAGE CLAMP®)
- W x H* x L (mm) 12 x 62 x 100

Housing design 750 (D)
- 16 connecting terminals (Push-in CAGE CLAMP®)
- W x H* x L (mm) 12 x 62 x 100

Marking Accessories

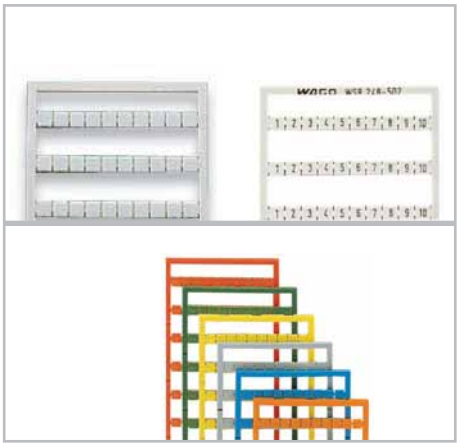

Miniature WSB quick marking system, blank, pre-marked and colored. Suitable for all I/O modules within the 750 Series.

Marker carrier for an individual I/O module. Suitable for all I/O modules within the 750 Series. The marker carrier can be accommodated in the upper miniature WSB carrier plate.

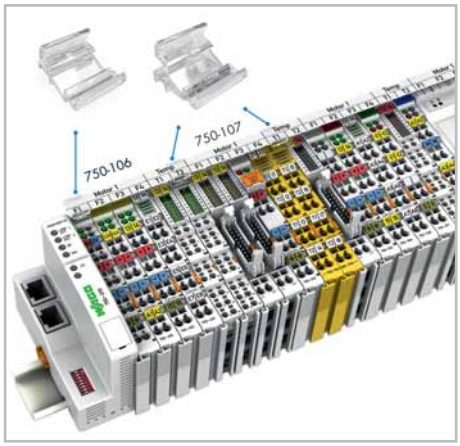

Marker carriers for an I/O node. Both carrier models (750-106 and 750-107) permit continuous marking regardless of the I/O module housing used.

Attachment/release on the mounting rail

Secure, automatic connection of the data and electronics power supply by gold-plated pressure contacts

Service interface for configuring the fieldbus coupler. Connectivity via configuration cable or radio adapter

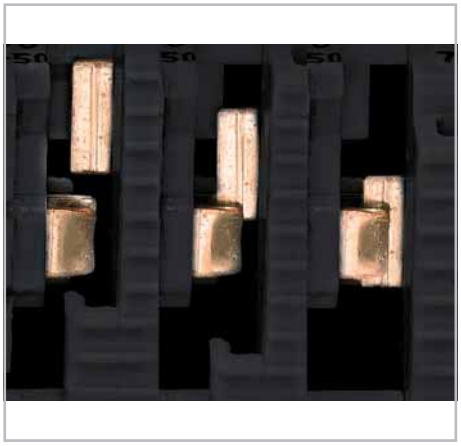

Secure, automatic connection of the power connection by self-cleaning blade contacts

Notice:
For some I/O modules, not all power jumper contacts are made! An I/O module with three power jumper contacts (e.g., 2-channel digital input) cannot be snapped into place behind an I/O module in which not every contact is made.

To increase electromagnetic compatibility (EMC), some components are connected to the DIN-rail by a discharge contact. The DIN-rail must always have a low-resistance connection to the ground potential.

Wide range of accessories for EMC-compliant installation including shield connection

Power supply

The fieldbus coupler always powers the internal electronics' power supply. The power supply to the field-side supply is electrically isolated. The division enables a separate supply for sensors and actuators. The I/O modules' connections automatically lead to transferring the supply voltages. Supply modules with diagnostics enable additional power supply monitoring. This ensures a flexible, user-specific supply design for a station.

The current supply to the electronics is limited by a maximum value. This value depends on the fieldbus coupler used. If the sum of the internal current demand of all the I/O modules exceeds this value, an additional bus supply module is necessary. Even in this case, the power supply to the field-side supply of 10 A may not be exceeded. However, different power supply modules allow a new power supply, formation of potential groups and the implementation of emergency stops.

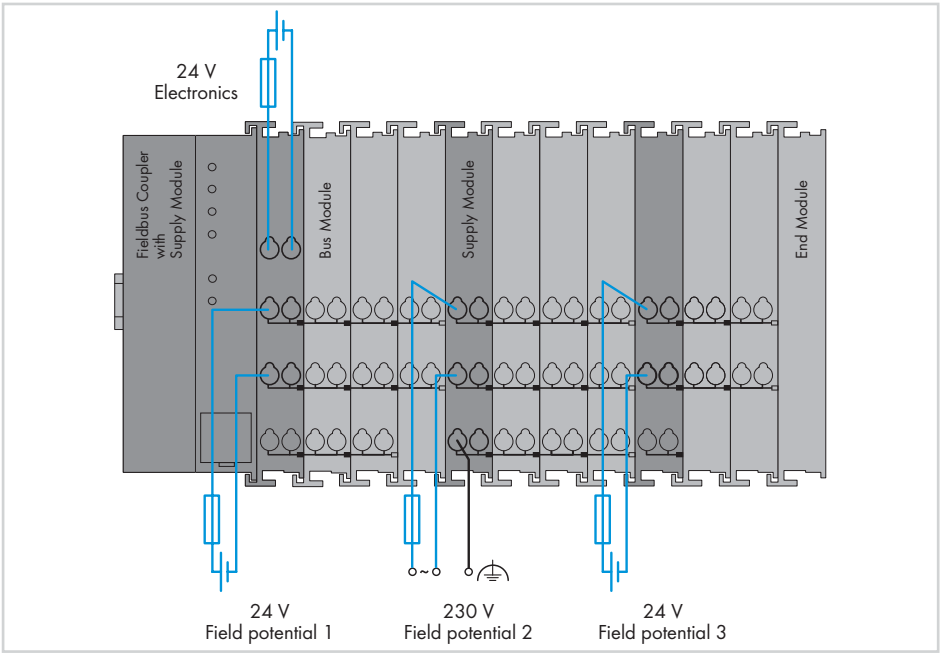

Notices

Additional steps must be must be implemented based on where the I/O-System is installed:

- Specific power and field-side power supply filters (750-624/040-001 or 750-626/040-000) are required for **marine** and onshore/offshore applications, as well as in telecontrol applications.

Please refer to the manual for details about the power supply's design.

Mixed operation:

Mixed operation (standard/XTR modules) within a node is possible when groups of modules are electrically isolated on the field side (i.e., electrically isolated power supply). The combination may be useful, for example, when there are only increased requirements for dielectric strength and immunity to interference, but the ambient temperature is not critical.

Interference-free in safety-related applications

To easily and safely perform cost-effective, centralized deactivation of complete actuator groups the actuator's power supply can be switched off using a safety switching device. This can either be performed for each individual actuator or by turning off the power supply to a group of control outputs.

In the event of failure, ensure that no interference from other current or power circuits occurs – even when the control voltage is switched off – so the defined safety function properties (logic and time response) remain unchanged.

All modules are designed to provide interference-free safety functionality. These modules comply with safety requirements up to Category 4 of DIN EN ISO 13849-1:2007. The safety category and performance level depend solely on the safety components and their wiring.

Attention!
Interference-free WAGO I/O modules have no active influence on the safety function, they are not an active part of the safety application and are not a substitute for the safety switching device! When using the components in safety functions, the corresponding notes must be observed in the relevant manual.

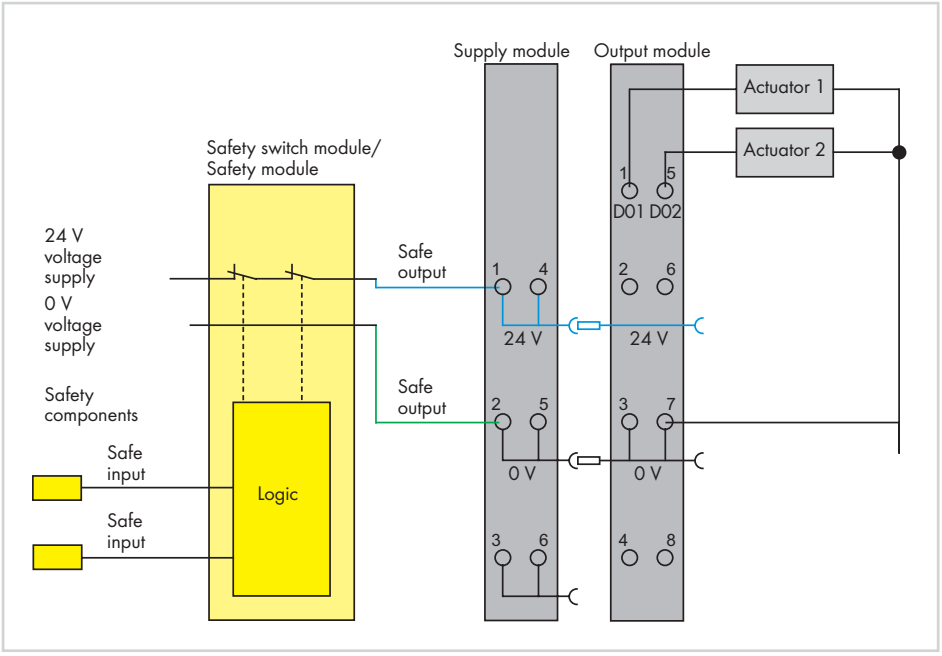

Example: Two-channel, double-pole power supply disconnection

General Specifications	
Operating voltage	24 VDC under laboratory conditions +15 °C ... +35 °C: 18 V ... 31.2 V (17.4 V ... 31.2 V)[1] for -40 °C ... +55 °C: 18 V ... 28.8 V (17.4 V ... 28.8 V)[1] for +55 °C ... +70 °C: 18 V ... 26.4 V (17.4 V ... 26.4 V)[1] [1] Including residual ripple of 15 %
Operating temperature	-40 °C ... +70 °C
Storage temperature	-40 °C ... +85 °C
Relative humidity	Max. 95 % short-term condensation acc. to class 3K7 / IEC EN 60721-3-3 (excluding wind-driven precipitation, water and ice formation)
Operating altitude	without temperature derating: 0 m ... 2000 m; with temperature derating: 2000 m ... 5000 m (0.5 K/100 m); max.: 5000 m
Degree of contamination	2 acc. to IEC 61131-2
Dielectric strength	acc. to (EN 60870-2-1) Module ≤ 50 V: 510 VAC/775 VDC; Module > 50 V: 2.5 kVAC/3.5 kVDC Isolation: Rated surge voltage Module ≤ 50 V: 1 kV (class VW1 acc. to EN 60870-2-1) Module > 50 V: 5 kV (class VW3 acc. to EN 60870-2-1) Surge: Module ≤ 50 V: 1 kV (L - L) / 2 kV (L – E) Module > 50 V: 2 kV (L - L) / 4 kV (L – E)
Vibration resistance	5g acc. to IEC 60068-2-6, EN 60870-2-2, IEC 60721-3-1, IEC 60721-3-3, EN 61131-2
Shock resistance	15g/11 ms/half-sine/1000 shocks acc. to IEC 60068-2-27 25g/6 ms/1000 shocks acc. to IEC60068-2-27
EMC immunity to interference	EN 61000-6-1, EN 61000-6-2, EN 61131-2 Marine applications, EN 50121-3-2, EN 50121-4 EN 50121-5, EN 60255-26, EN 60870-2-1 EN 61850-3, IEC 61000-6-5, IEEE 1613, VDEW: 1994
EMC emission of interference	EN 61000-6-3 and EN 61000-6-4, EN 61131-2 EN 60255-26, marine applications EN 60870-2-1 (industrial and residential areas) EN 61850-3 (industrial and residential areas) EN 50121-3-2, EN 50121-4, EN 50121-5
Protection type	IP20
Mounting position	standing horizontal/lying, vertical
Type of mounting	on DIN-rail
Housing material	Polycarbonate, polyamide 6.6
Stress due to contaminants	acc. to IEC 60068-2-42 and IEC 60068-2-43
Maximum pollutant concentration with a relative humidity < 75 %	SO2 ≤ 25 ppm; H2S ≤ 10 ppm
Connection technology	CAGE CLAMP® (for standard I/O modules and fieldbus couplers)
Conductor cross-section; stripped lengths for standard I/O modules and fieldbus couplers: ECO fieldbus couplers:	 0.25 mm² ... 2.5 mm²/24 ... 14 AWG; 8 ... 9 mm/0.33 in. 0.25 mm² ... 1.5 mm²/24 ... 16 AWG; 5 ... 6 mm/0.22 in.
Connection technology	Push-in CAGE CLAMP® (for I/O modules with 16 connecting terminals)
Conductor cross-section; stripped lengths for I/O modules with 16 connecting terminals:	 0.25 mm² ... 1.5 mm²/24 ... 16 AWG; 8 ... 9 mm/0.33 in.
Current via power jumper contacts	max. 10 A

PROFIBUS DP/V1 Fieldbus Coupler

for eXTReme environmental conditions; 12 Mbaud; digital and analog signals

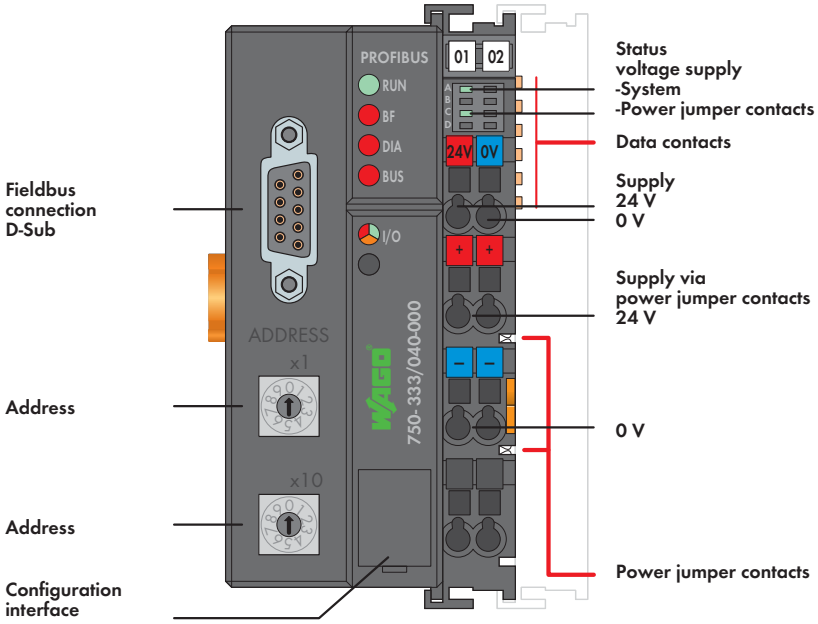

The 750-333 Fieldbus Coupler maps the peripheral data of all the I/O modules of the WAGO-I/O-SYSTEM on PROFIBUS DP.
When initializing, the coupler determines the node's module structure and creates the process image of all inputs and outputs. In order to optimize addresses, the I/O modules with a bit width smaller than 8 are grouped in one byte. It is furthermore possible to deactivate I/O modules and to modify the image of the node according to the connected signals without having to modify the existing application.

Notice: GSD files required

The diagnostic concept is based on ID- and channel-related diagnostics according to EN 50170. This does away with the need for programming modules to evaluate manufacturer-specific diagnostic data.

The module is ideally suited for operation in harsh environmental conditions:
- strongly extended temperature range
- higher dielectric strength and EMC resistance
- higher vibration and shock resistance

Description	Item No.	Pack. Unit
PROFIBUS DP/V1 12 Mbd /XTR	**750-333/040-000**	1

Accessories		Item No.	Pack. Unit
GSD files	Download: www.wago.com		
Miniature WSB Quick marking system			
	plain	**248-501**	5
	with marking	see Section 11	

Standards and Approvals

Standard	EN 50170
Conformity marking	CE
Korea Certification	
Marine applications	GL
UL 508	
ANSI/ISA 12.12.01	Class I, Div. 2, Grp. ABCD, T4

System Data

No. of couplers connected to Master	96 with repeater
Max. no. of I/O points	approx. 6000 (depends on master)
Transmission medium	Cu cable acc. to EN 50170
Max. length of fieldbus segment	100 m ... 1200 m
	(depends on baud rate/cable)
Baud rate	9.6 Kbaud ... 12 Mbaud
Transmission time	typ. 1 ms (10 couplers; 32 digital I/Os per
	coupler at 12 Mbaud) max. 3.3 ms
Buscoupler connection	1 x D-Sub 9; socket

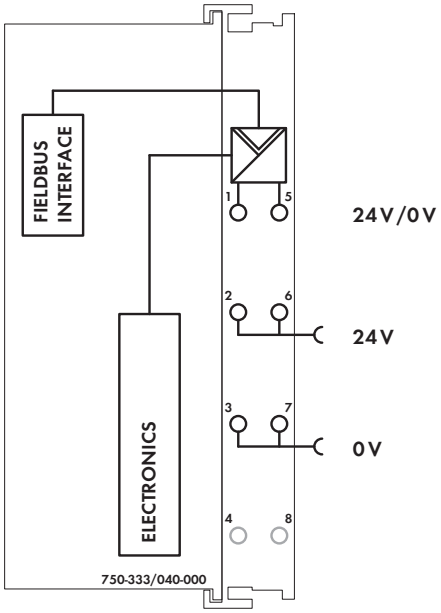

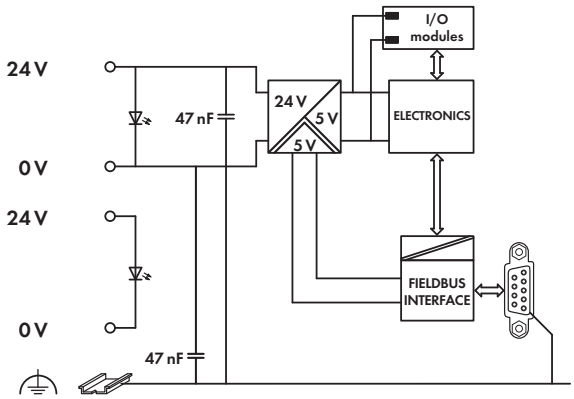

Technical Data

Number of I/O modules	63
Fieldbus	
Max. input process image	244 bytes
Max. output process image	244 bytes
Configuration	via PC or PLC
Power supply	via CAGE CLAMP® connections, 24 VDC
under laboratory conditions +15 °C ... +35 °C	18 V ... 31.2 V (17.4 V ... 31.2 V)[1)]
for -40 °C ... +55 °C	18 V ... 28.8 V (17.4 V ... 28.8 V)[1)]
for +55 °C ... +70 °C	18 V ... 26.4 V (17.4 V ... 26.4 V)[1)]
	[1)] including residual ripple of 15 %
Max. input current (24 V)	500 mA
Power supply efficiency	90 %
Internal current consumption (5 V)	200 mA
Total current for I/O modules (5 V)	1800 mA
Voltage via power jumper contacts	24 V DC
Current via power jumper contacts (max.)	10 A DC
Rated surge voltage	1 kV

General Specifications

Operating temperature	-40 °C ... +70 °C
Wire connection	CAGE CLAMP®
Cross sections	0.25 mm² ... 2.5 mm² / AWG 24 ... 14
Strip lengths	8 ... 9 mm / 0.33 in
Dimensions (mm) W x H x L	51 x 65 x 100
	Height from upper-edge of DIN 35 rail
Weight	179.6 g
Storage temperature	-40 °C ... +85 °C
Relative humidity	95 %, short-term condensation acc. to class
	3K7 / IEC EN 60721-3-3 (except wind-
	driven precipitation, water and ice
	formation)
Vibration resistance	acc. to IEC 60068-2-6 (acceleration: 5g),
	EN 60870-2-2, IEC 60721-3-1, -3,
	EN 61131-2
Shock resistance	acc. to IEC 60068-2-27
Degree of protection	IP20
EMC immunity of interference	acc. to EN 61000-6-2, EN 61131-2,
	marine applications, EN 50121-3-2, -4, -5,
	EN 60255-26, EN 60870-2-1,
	EN 61850-3, IEC 61000-6-5, IEEE 1613,
	VDEW: 1994
EMC emission of interference	acc. to EN 61000-6-4, EN 61131-2,
	EN 60255-26, marine applications,
	EN 60870-2-1, EN 61850-3,
	EN 50121-3-2, -4, -5
Operating altitude	without temperature derating:
	0 m ... 2000 m; with temperature derating:
	2000 m ... 5000 m (0.5 K/100 m);
	max.: 5000 m

ETHERNET Fieldbus Coupler

for eXTReme environmental conditions; 10/100 Mbit/s; digital and analog signals

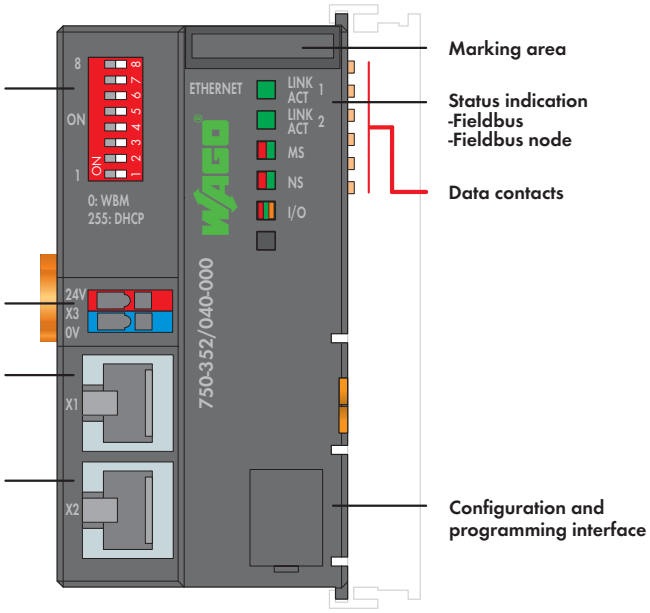

The 750-352 ETHERNET Fieldbus Coupler connects ETHERNET to the modular WAGO-I/O-SYSTEM.
The fieldbus coupler automatically configures, creating a local process image which may include analog, digital or specialty modules. Analog and specialty module data is sent via words and/or bytes; digital data is sent bit by bit.
Two ETHERNET interfaces and an integrated switch allow the fieldbus to be wired in a line topology. This eliminates the need for additional network devices, such as switches or hubs. Both interfaces support Auto-Negotiation and Auto-MDI(X).
The DIP switch configures the last byte of the IP address and may be used for IP address assignment (DHCP, BootP, static).
The coupler is designed for fieldbus communication in both EtherNet/IP and MODBUS networks. It also supports a wide variety of standard ETHERNET protocols (e.g., HTTP, BootP, DHCP, DNS, SNMP, FTP). An integrated Web server provides configuration options and status information from the coupler.
The coupler has an integrated supply terminal for the system voltage. The field power jumper contacts are supplied via a separate supply module.

The module is ideally suited for operation in harsh environmental conditions:
- strongly extended temperature range
- higher dielectric strength and EMC resistance
- higher vibration and shock resistance

Description	Item No.	Pack. Unit
ETHERNET Fieldbus Coupler /XTR	**750-352/040-000**	1

Accessories		Item No.	Pack. Unit
Miniature WSB Quick marking system			
	plain	**248-501**	5
	with marking	see Section 11	

Approvals

Conformity marking	CE
Korea Certification	KC
Marine applications	GL
cULus UL 508	
cULus ANSI/ISA 12.12.01	Class I, Div. 2, Grp. ABCD, T4

System Data

No. of couplers connected to Master	limited by ETHERNET specification
Transmission medium	Twisted Pair S-UTP
	100 Ω, Cat 5;
	Max. line length: 100 m
Baud rate	10/100 Mbit/s
Transmission performance	Class D acc. to EN 50173
Buscoupler connection	2 x RJ-45
Protocols	EtherNet/IP, MODBUS/TCP (UDP), HTTP,
	BootP, DHCP, DNS, FTP, SNMP

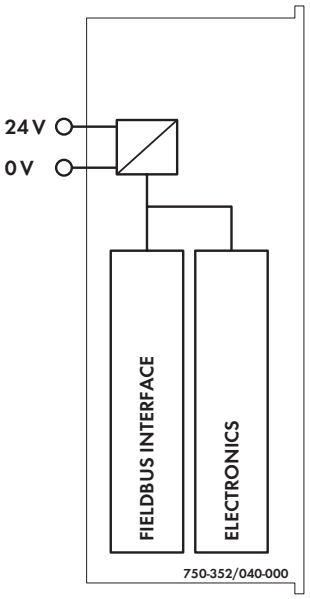

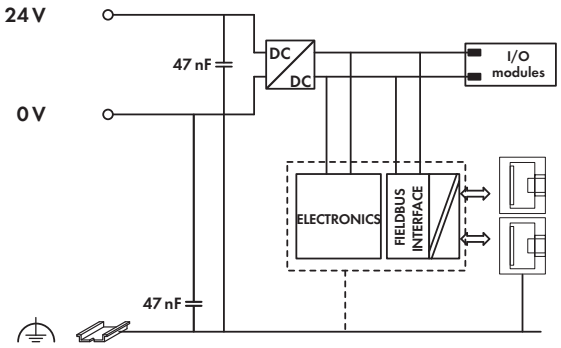

Technical Data

Number of I/O modules	64
with bus extension	250
Fieldbus	
Max. input process image	1020 words
Max. output process image	1020 words
Configuration	via PC
Power supply	via CAGE CLAMP® connections, 24 VDC; 18 V ... 31.2 V (17.4 V ... 31.2 V)[1)]
	[1)] including residual ripple of 15 %
Input current typ. at rated load (24 V)	280 mA
Efficiency of the power supply (typ.) at nominal load (24 V)	90 %
Internal current consumption (5 V)	450 mA
Total current for I/O modules (5 V)	700 mA
Voltage via power jumper contacts	24 V DC
Rated surge voltage	1 kV

General Specifications

Operating temperature	-40 °C ... +70 °C
Wire connection	CAGE CLAMP®
Cross sections	0.25 mm² ... 1.5 mm² / AWG 24 ... 14
Strip lengths	5 ... 6 mm / 0.22 in
Dimensions (mm) W x H x L	50 x 65 x 100
	Height from upper-edge of DIN 35 rail
Weight	80.6 g
Storage temperature	-40 °C ... +85 °C
Relative humidity	95 %, short-term condensation acc. to class 3K7 / IEC EN 60721-3-3 (except wind-driven precipitation, water and ice formation)
Vibration resistance	acc. to IEC 60068-2-6 (acceleration: 5g), EN 60870-2-2, IEC 60721-3-1, -3, EN 61131-2
Shock resistance	acc. to IEC 60068-2-27
Degree of protection	IP20
EMC immunity of interference	acc. to EN 61000-6-1, -2, EN 61131-2, marine applications, EN 50121-3-2, -4, -5, EN 60255-26, EN 60870-2-1, EN 61850-3, IEC 61000-6-5, IEEE 1613, VDEW: 1994
EMC emission of interference	acc. to EN 61000-6-3, -4, EN 61131-2, EN 60255-26, marine applications, EN 60870-2-1, EN 61850-3, EN 50121-3-2, -4, -5
Operating altitude	without temperature derating: 0 m ... 2000 m; with temperature derating: 2000 m ... 5000 m (0.5 K/100 m); max.: 5000 m

CANopen Fieldbus Coupler D-Sub

for eXTReme environmental conditions; 10 kbaud ... 1 Mbaud; digital and analog signals

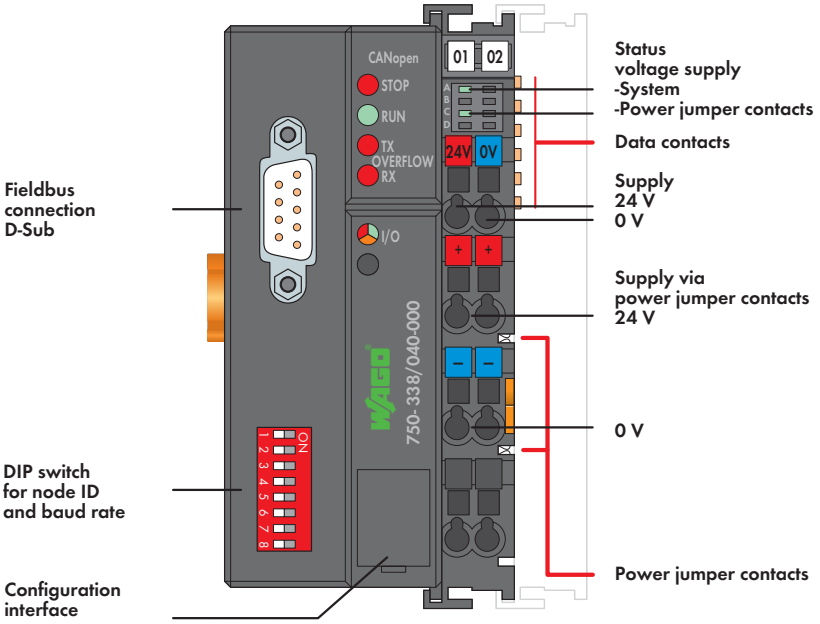

The 750-338/040-000 Fieldbus Coupler connects the WAGO-I/O-SYSTEM as a slave to the CANopen fieldbus. Data is transmitted via PDOs and SDOs. The fieldbus coupler automatically configures, creating a local process image which may include analog, digital or specialty modules. Analog and specialty module data is sent via words and/or bytes, digital data is sent bit by bit.
The local process image is divided into two data zones containing the data received and the data to be sent. The process data can be sent via the CANopen bus to a control system for further processing. The process output data can be sent via the CANopen bus.
The data of the analog modules is stored in the PDOs according to the order in which the modules are connected to the coupler. The bits of the digital modules are sent byte by byte and also mapped in the PDOs. If the amount of digital information exceeds 8 bits, the buscoupler automatically starts with a new byte. All entries of the object directory can be mapped as required in the 32 Rx PDOs and 32 Tx PDOs. The complete input and output process image can be transmitted via SDOs.
Spacer modules can be set via software.

The module is ideally suited for operation in harsh environmental conditions:
- strongly extended temperature range
- higher dielectric strength and EMC resistance
- higher vibration and shock resistance

Description	Item No.	Pack. Unit
CANopen D-Sub /XTR	**750-338/040-000**	1

Accessories		Item No.	Pack. Unit
EDS files	Download: www.wago.com		
Miniature WSB Quick marking system			
	plain	**248-501**	5
	with marking	see Section 11	

Approvals

Conformity marking	CE
Korea Certification	
Marine applications	GL
UL 508	
ANSI/ISA 12.12.01	Class I, Div. 2, Grp. ABCD, T4

System Data

No. of couplers connected to Master	110
Transmission medium	Shielded Cu cable 3 x 0.25 mm²
Max. length of bus line	30 m ... 1000 m
	(depends on baud rate/cable)
Baud rate	10 Kbaud ... 1 Mbaud
Buscoupler connection	1 x D-Sub 9; plug

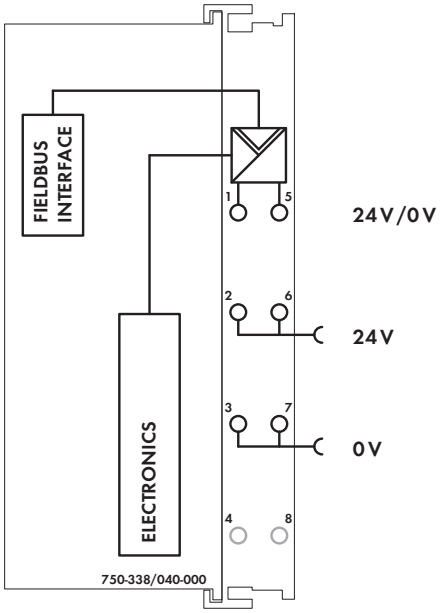

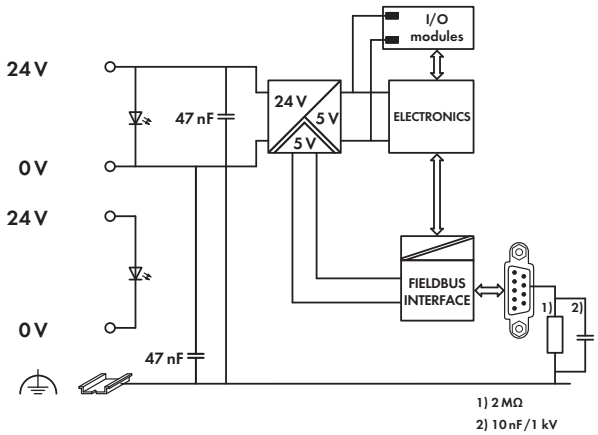

Technical Data

Number of I/O modules	64
Fieldbus	
Max. input process image	512 bytes
Max. output process image	512 bytes
Configuration	via PC or PLC
No. of PDOs	32 Tx / 32 Rx
No. of SDOs	2 server SDOs
Communication profile	DS-301 V4.1
Device profile	DS 401 V2.0
	Marginal check
	Edge-triggered PDOs
	Programmable error response
COB ID distribution	SDO, standard
Node ID distribution	DIP switches
Other CANopen features	NMT slave
	Minimum boot-up
	Variable PDO mapping
	Emergency message
	Life guarding
	Configuration of virtual modules
Power supply	via CAGE CLAMP® connections, 24 VDC
under laboratory conditions +15 °C ... +35 °C	18 V ... 31.2 V (17.4 V ... 31.2 V)[1]
for -40 °C ... +55 °C	18 V ... 28.8 V (17.4 V ... 28.8 V)[1]
for +55 °C ... +70 °C	18 V ... 26.4 V (17.4 V ... 26.4 V)[1]
	[1] including residual ripple of 15 %
Max. input current (24 V)	500 mA
Power supply efficiency	90 %
Internal current consumption (5 V)	350 mA
Total current for I/O modules (5 V)	1650 mA
Voltage via power jumper contacts	24 V DC
Current via power jumper contacts (max.)	10 A DC
Rated surge voltage	1 kV

General Specifications

Operating temperature	-40 °C ... +70 °C
Wire connection	CAGE CLAMP®
Cross sections	0.25 mm² ... 2.5 mm² / AWG 24 ... 14
Strip lengths	8 ... 9 mm / 0.33 in
Dimensions (mm) W x H x L	51 x 65 x 100
	Height from upper-edge of DIN 35 rail
Weight	200 g
Storage temperature	-40 °C ... +85 °C
Relative humidity	95 %, short-term condensation acc. to class
	3K7 / IEC EN 60721-3-3 (except wind-
	driven precipitation, water and ice
	formation)
Vibration resistance	acc. to IEC 60068-2-6 (acceleration: 5g),
	EN 60870-2-2, IEC 60721-3-1, -3,
	EN 61131-2
Shock resistance	acc. to IEC 60068-2-27
Degree of protection	IP20
EMC immunity of interference	acc. to EN 61000-6-1, -2, EN 61131-2,
	marine applications, EN 50121-3-2, -4, -5,
	EN 60255-26
EMC emission of interference	acc. to EN 61000-6-3, -4, EN 61131-2,
	EN 60255-26, marine applications,
	EN 60870-2-1, EN 61850-3,
	EN 50121-3-2, -4, -5
Operating altitude	without temperature derating:
	0 m ... 2000 m; with temperature derating:
	2000 m ... 5000 m (0.5 K/100 m);
	max.: 5000 m

8-Channel Digital Input Module 24 VDC

for eXTReme environmental conditions; high-side switching, 2-wire connection

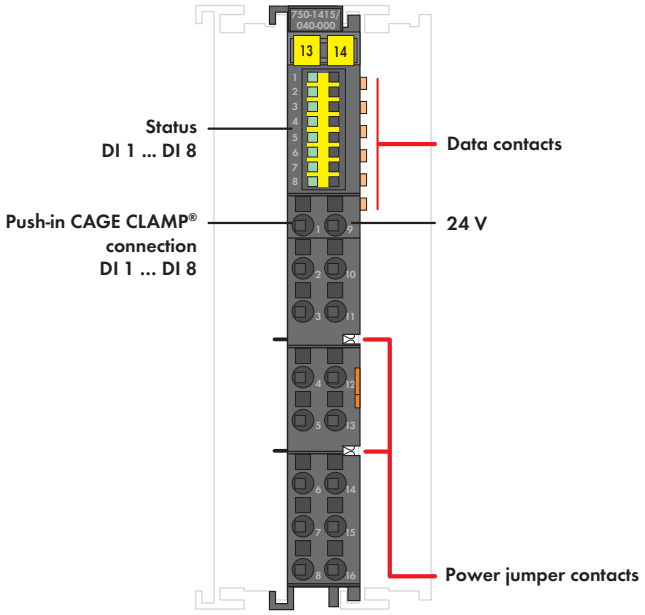

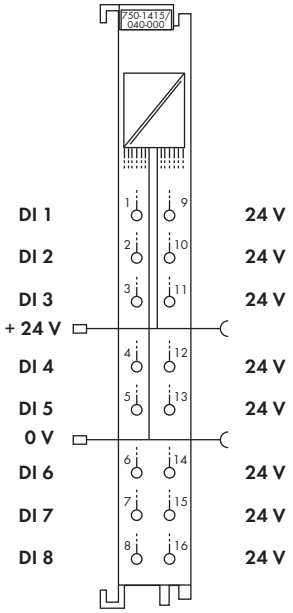

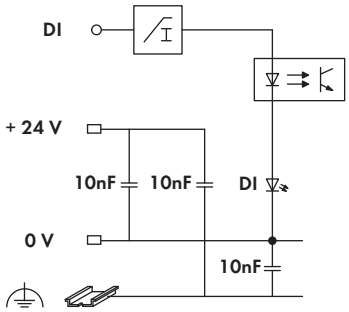

This 2-wire digital input module provides 8 channels at a width of just 12 mm. It receives binary control signals from digital field devices (e.g., sensors, encoders, switches or proximity switches).
The module features Push-in CAGE CLAMP® connections providing push-in termination of solid conductors.
Each input channel has a noise-rejection RC filter with 3.0 ms time constant.
A green LED indicates the switched status of each channel.
Field and system levels are electrically isolated.

An operating tool with a 2.5 mm blade (210-719) is required to open the Push-in CAGE CLAMP® connections.

The module is ideally suited for operation in harsh environmental conditions:
- extended temperature range
- higher dielectric strength and EMC resistance
- higher vibration and shock resistance

Description	Item No.	Pack. Unit
8DI 24VDC 3.0ms, 2-wire connection /XTR	**750-1415/040-000**	1

Accessories		Item No.	Pack. Unit
Miniature WSB Quick marking system			
	plain	**248-501**	5
	with marking	see Section 11	
Operating tool, with partially insulated shaft, type 1, blade (2.5 x 0.4) mm		**210-719**	50

Approvals

Conformity marking	CE
Korea Certification	KC
Marine applications	GL
cULus UL 508	
cULus ANSI/ISA 12.12.01	Class I, Div. 2, Grp. ABCD, T4

Technical Data

Wire connection	Push-in CAGE CLAMP®
Cross sections	0.25 mm² ... 1.5 mm² / AWG 24 ... 16
Strip lengths	8 ... 9 mm / 0.33 in
Dimensions (mm) W x H x L	12 x 62 x 100
	Height from upper-edge of DIN 35 rail
Weight	46.8 g
Operating temperature	-40 °C ... +70 °C
Storage temperature	-40 °C ... +85 °C
Relative humidity	95 %, short-term condensation acc. to class 3K7 / IEC EN 60721-3-3 (except wind-driven precipitation, water and ice formation)
Operating altitude	without temperature derating: 0 m ... 2000 m; with temperature derating: 2000 m ... 5000 m (0.5 K/100 m); max.: 5000 m

Technical Data

Number of inputs	8
Input type	High-side switching
Signal voltage (0)	-3 V ... +5 VDC (Type 1/3)
Signal voltage (1)	+11 V ... +30 VDC (Type 3)
Input current (typ.)	+1.6 mA (at 5 VDC)
	+4.3 mA ... +4.6 mA (at 24 VDC)
Input filter	3.0 ms
Current consumption (internal)	6 mA
Current consumption typ. (field side)	2 mA
Voltage via power jumper contacts	24 VDC
under laboratory conditions +15 °C ... +35 °C	18 V ... 31.2 V (17.4 V ... 31.2 V)[1]
for -40 °C ... +55 °C	18 V ... 28.8 V (17.4 V ... 28.8 V)[1]
for +55 °C ... +70 °C	18 V ... 26.4 V (17.4 V ... 26.4 V)[1]
	[1] including residual ripple of 15 %
Current via power jumper contacts (max.)	10 A
Rated surge voltage	1 kV
Bit width	8 bits
Vibration resistance	acc. to IEC 60068-2-6 (acceleration: 5g), EN 60870-2-2, IEC 60721-3-1, -3, EN 61131-2
Shock resistance	acc. to IEC 60068-2-27
EMC immunity of interference	acc. to EN 61000-6-1, -2, EN 61131-2, marine applications, EN 50121-3-2, -4, -5, EN 60255-26, EN 60870-2-1, EN 61850-3, IEC 61000-6-5, IEEE 1613, VDEW: 1994
EMC emission of interference	acc. to EN 61000-6-3, -4, EN 61131-2, EN 60255-26, marine applications, EN 60870-2-1, EN 61850-3, EN 50121-3-2, -4, -5

16-Channel Digital Input Module 24 VDC

for eXTReme environmental conditions; high-side switching

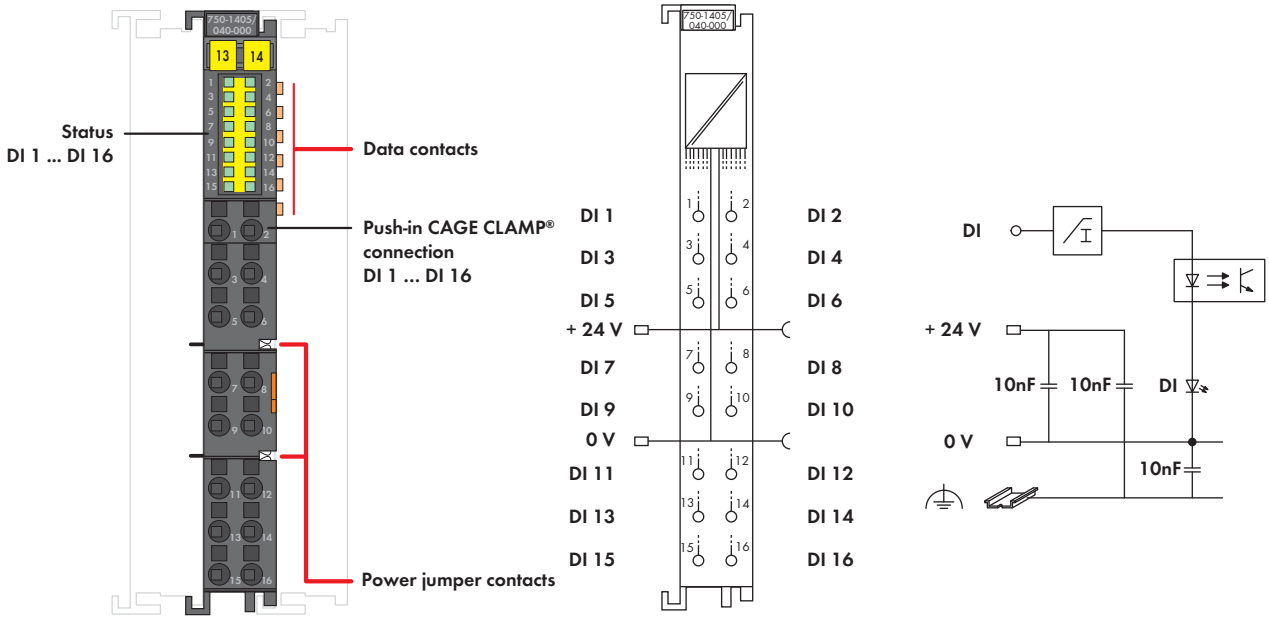

This digital input module provides 16 channels at a width of just 12 mm.
It receives binary control signals from digital field devices (e.g., sensors, encoders, switches or proximity switches).
The module features Push-in CAGE CLAMP® connections providing push-in termination of solid conductors.
Each input channel has a noise-rejection RC filter with 3.0 ms time constant.
A green LED indicates the switched status of each channel.
Field and system levels are electrically isolated.

The module is ideally suited for operation in harsh environmental conditions:
- extended temperature range
- higher dielectric strength and EMC resistance
- higher vibration and shock resistance

Description	Item No.	Pack. Unit
16DI 24VDC 3.0ms /XTR	**750-1405/040-000**	1

Accessories		Item No.	Pack. Unit
Miniature WSB Quick marking system			
	plain	**248-501**	5
	with marking	see Section 11	
Operating tool, with partially insulated shaft, type 1, blade (2.5 x 0.4) mm		**210-719**	50

Approvals

Conformity marking	CE
Korea Certification	KC
Marine applications	GL
UL 508	
ANSI/ISA 12.12.01	Class I, Div. 2, Grp. ABCD, T4

Technical Data

Wire connection	Push-in CAGE CLAMP®
Cross sections	0.25 mm² ... 1.5 mm² / AWG 24 ... 16
Strip lengths	8 ... 9 mm / 0.33 in
Dimensions (mm) W x H x L	12 x 62 x 100
	Height from upper-edge of DIN 35 rail
Weight	60 g
Operating temperature	-40 °C ... +70 °C
Storage temperature	-40 °C ... +85 °C
Relative humidity	95 %, short-term condensation acc. to class 3K7 / IEC EN 60721-3-3 (except wind-driven precipitation, water and ice formation)
Operating altitude	without temperature derating: 0 m ... 2000 m; with temperature derating: 2000 m ... 5000 m (0.5 K/100 m); max.: 5000 m

Technical Data

Number of inputs	16
Input type	Type 1 (IEC 61131-2), high-side switching
Signal voltage (0)	-3 V ... +5 VDC
Signal voltage (1)	15 V ... 30 VDC
Input current (typ.)	+0.6 mA (at 5 VDC)
	+2.1 mA ... +2.4 mA (at 24 VDC)
Input filter	3.0 ms
Delay time "0" > "1"	3 ms
Delay time "1" > "0"	4 ms
Current consumption (internal)	25 mA
Voltage via power jumper contacts	24 VDC
under laboratory conditions +15 °C ... +35 °C	18 V ... 31.2 V (17.4 V ... 31.2 V)[1)]
for -40 °C ... +55 °C	18 V ... 28.8 V (17.4 V ... 28.8 V)[1)]
for +55 °C ... +70 °C	18 V ... 26.4 V (17.4 V ... 26.4 V)[1)]
	[1)] including residual ripple of 15 %
Current via power jumper contacts (max.)	10 A
Rated surge voltage	1 kV
Bit width	16 bits
Vibration resistance	acc. to IEC 60068-2-6 (acceleration: 5g), EN 60870-2-2, IEC 60721-3-1, -3, EN 61131-2
Shock resistance	acc. to IEC 60068-2-27
EMC immunity of interference	acc. to EN 61000-6-1, -2, EN 61131-2, marine applications, EN 50121-3-2, -4, -5, EN 60255-26, EN 60870-2-1, EN 61850-3, IEC 61000-6-5, IEEE 1613, VDEW: 1994
EMC emission of interference	acc. to EN 61000-6-3, -4, EN 61131-2, EN 60255-26, marine applications, EN 60870-2-1, EN 61850-3, EN 50121-3-2, -4, -5

2-Channel Digital Input Module 220 VDC

for eXTReme environmental conditions; 2- to 4-wire connection; high-side switching

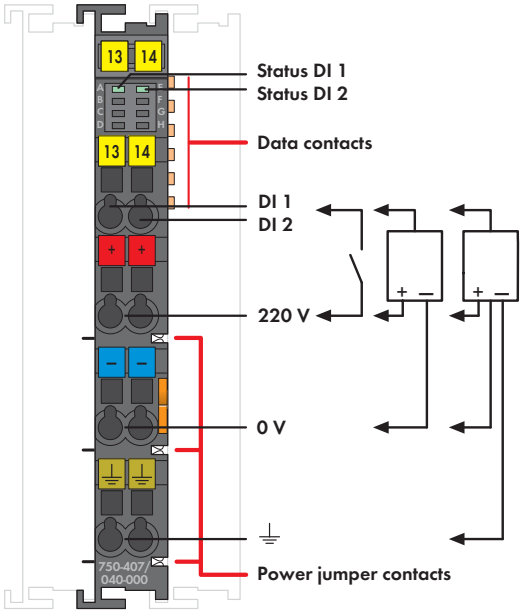

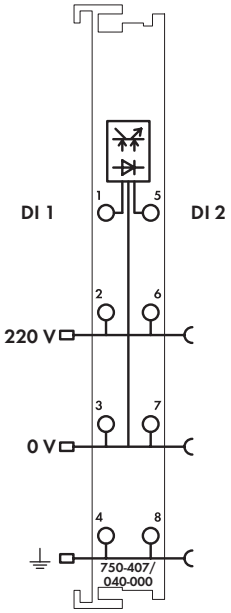

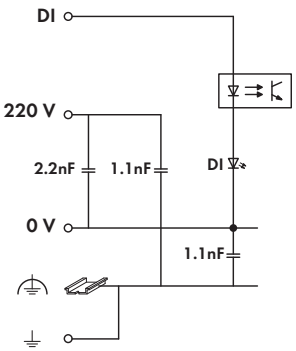

This digital input module receives control signals from digital field devices (e.g., sensors).
The module is a 4-conductor device allowing direct connection of sensors with ground contact.
Each input module has a 3.0 ms noise-rejection filter.
Field and system levels are electrically isolated.
When using the ground CAGE CLAMP® connection, the field power must be reapplied after every seven 750-407/040-000 I/O modules!

The module is ideally suited for operation in harsh environmental conditions:
- extended temperature range
- higher dielectric strength and EMC resistance
- higher vibration and shock resistance

Description	Item No.	Pack. Unit
2DI 220VDC 3.0ms /XTR	**750-407/040-000**	1

Accessories		Item No.	Pack. Unit
Miniature WSB Quick marking system			
	plain	**248-501**	5
	with marking	see Section 11	

Approvals

Conformity marking	CE
Korea Certification	
Marine applications	GL
UL 508	
ANSI/ISA 12.12.01	Class I, Div. 2, Grp. ABCD, T4

Technical Data

Wire connection	CAGE CLAMP®
Cross sections	0.25 mm² ... 2.5 mm² / AWG 24 ... 14
Strip lengths	8 ... 9 mm / 0.33 in
Dimensions (mm) W x H x L	12 x 62 x 100
	Height from upper-edge of DIN 35 rail
Weight	48 g
Operating temperature	-40 °C ... +70 °C
Storage temperature	-40 °C ... +85 °C
Relative humidity	95 %, short-term condensation acc. to class 3K7 / IEC EN 60721-3-3 (except wind-driven precipitation, water and ice formation)
Operating altitude	without temperature derating: 0 m ... 2000 m; with temperature derating: 2000 m ... 5000 m (0.5 K/100 m); max.: 5000 m

Technical Data

Number of inputs	2
Signal voltage (0)	-3 V ... +100 VDC
Signal voltage (1)	160 V ... 286 VDC
Voltage via power jumper contacts	220 VDC (-20 % ... +25 %)
Input current (typ.)	1.2 mA at 220 VDC
Input filter	3.0 ms
Current consumption (internal)	5 mA
Current via power jumper contacts (max.)	10 A (operating temperature < 60 °C); 8 A (60°C ... 70°C operating temperature)
Rated surge voltage	5.0 kV (EN 60870-2-1 / Class VW3); 4.0 kV (UL 508); 4.0 kV (EN 60664-1 / up to 4,000 m above sea level); 2.5 kV (EN 60664-1 / > 4,000 m up to 5,000 m above sea level)
Overvoltage category	Nominal voltage 220 V: III (EN 60664-1 / up to 4,000 m above sea level); II (EN 60664-1 / > 4,000 m up to 5,000 m above sea level)
Degree of pollution	2 (EN 60664-1)
Bit width	2 bits
Vibration resistance	acc. to IEC 60068-2-6 (acceleration: 5g), EN 60870-2-2, IEC 60721-3-1, -3, EN 61131-2
Shock resistance	acc. to IEC 60068-2-27
EMC immunity of interference	acc. to EN 61000-6-1, -2, EN 61131-2, marine applications, EN 50121-3-2, -4, -5, EN 60255-26, EN 60870-2-1, EN 61850-3, IEC 61000-6-5, IEEE 1613, VDEW: 1994
EMC emission of interference	acc. to EN 61000-6-3, -4, EN 61131-2, EN 60255-26, marine applications, EN 60870-2-1, EN 61850-3, EN 50121-3-2, -4, -5

2-Channel Digital Output Module 24 VDC

for eXTReme environmental conditions; short-circuit protected, high-side switching, with diagnostics

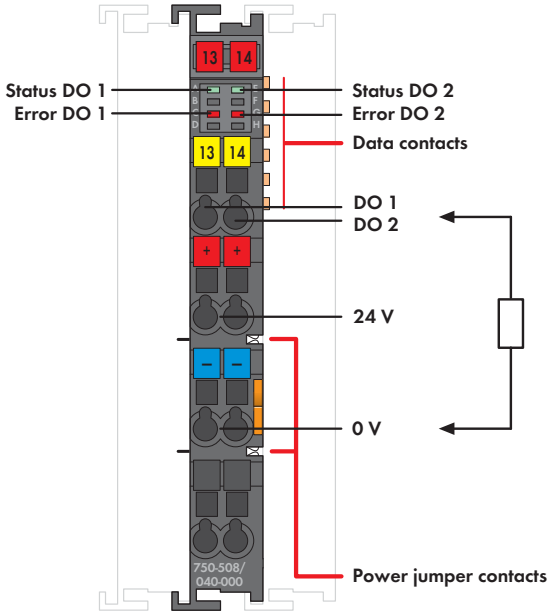

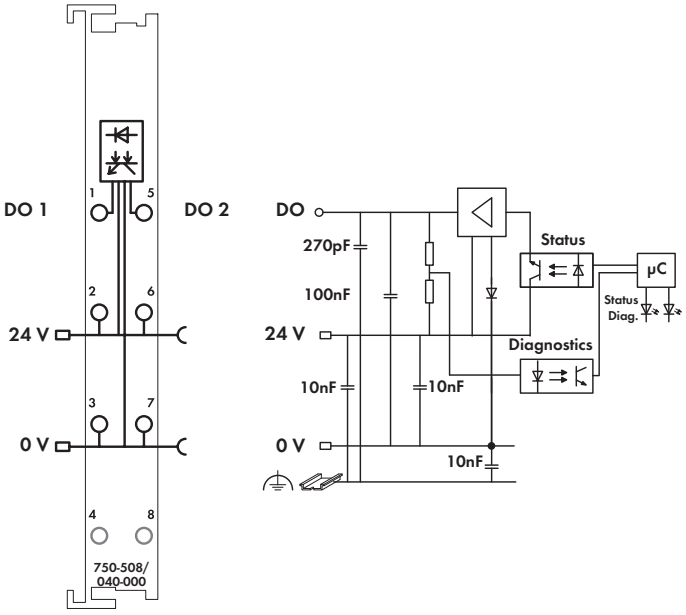

This digital output module transmits control signals from the automation device to the connected actuators.
All outputs are short-circuit proof.
This output module detects the following errors: overload, short-circuit and wire break.
The status is transmitted to the fieldbus coupler and indicated by LEDs.
The module is a 3-conductor device.
Field and system levels are electrically isolated.

The module is ideally suited for operation in harsh environmental conditions:
- strongly extended temperature range
- higher dielectric strength and EMC resistance
- higher vibration and shock resistance

Description	Item No.	Pack. Unit
2DO 24VDC 2.0A/Diagnostics /XTR	**750-508/040-000**	1
Interference-free for use in safety functions (see manual)		

Accessories		Item No.	Pack. Unit
Miniature WSB Quick marking system			
	plain	**248-501**	5
	with marking	see Section 11	

Approvals

Conformity marking	CE
Korea Certification	KC
Marine applications	GL
cULus UL 508	
cULus ANSI/ISA 12.12.01	Class I, Div. 2, Grp. ABCD, T4

Technical Data

Wire connection	CAGE CLAMP®
Cross sections	0.25 mm² ... 2.5 mm² / AWG 24 ... 14
Strip lengths	8 ... 9 mm / 0.33 in
Dimensions (mm) W x H x L	12 x 62 x 100
	Height from upper-edge of DIN 35 rail
Weight	48.6 g
Operating temperature	-40 °C ... +70 °C
Storage temperature	-40 °C ... +85 °C
Relative humidity	95 %, short-term condensation acc. to class 3K7 / IEC EN 60721-3-3 (except wind-driven precipitation, water and ice formation)
Operating altitude	without temperature derating: 0 m ... 2000 m; with temperature derating: 2000 m ... 5000 m (0.5 K/100 m); max.: 5000 m

Technical Data

No. of outputs	2
Output type	High-side switching
Type of load	Inductive, resistive loads and lamps
Max. switching frequency	1 kHz
Output current (max.)	2 A
Current consumption (internal)	14 mA
Current consumption typ. (field side)	7 mA + charge
Voltage via power jumper contacts	24 VDC
under laboratory conditions +15 °C ... +35 °C	18 V ... 31.2 V (17.4 V ... 31.2 V)[1]
for -40 °C ... +55 °C	18 V ... 28.8 V (17.4 V ... 28.8 V)[1]
for +55 °C ... +70 °C	18 V ... 26.4 V (17.4 V ... 26.4 V)[1]
	[1] including residual ripple of 15 %
Current via power jumper contacts (max.)	10 A
Rated surge voltage	1 kV
Bit width	2 bits
Vibration resistance	acc. to IEC 60068-2-6 (acceleration: 5g), EN 60870-2-2, IEC 60721-3-1, -3, EN 61131-2
Shock resistance	acc. to IEC 60068-2-27
EMC immunity of interference	acc. to EN 61000-6-1, -2, EN 61131-2, marine applications, EN 50121-3-2, -4, -5, EN 60255-26, EN 60870-2-1, EN 61850-3, IEC 61000-6-5, IEEE 1613, VDEW: 1994
EMC emission of interference	acc. to EN 61000-6-3, -4, EN 61131-2, EN 60255-26, marine applications, EN 60870-2-1, EN 61850-3, EN 50121-3-2, -4, -5

8-Channel Digital Output Module 24 VDC

for eXTReme environmental conditions; high-side switching, 2-wire connection

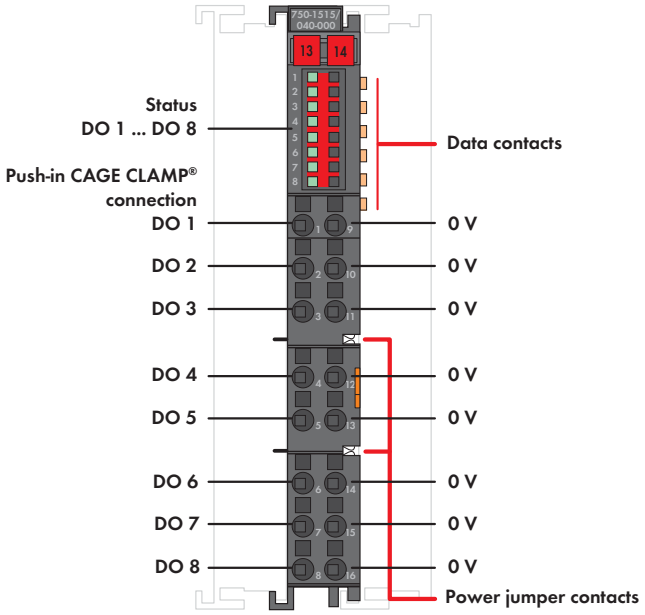

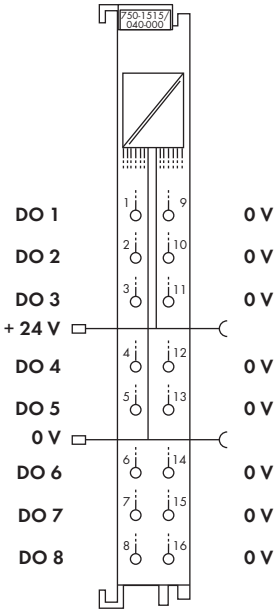

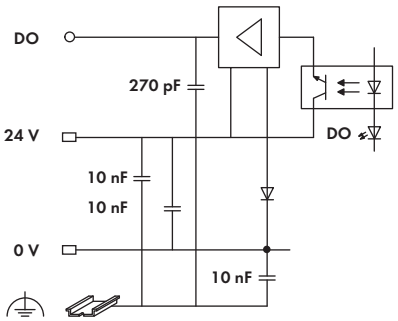

This 2-wire digital output module provides 8 channels at a width of just 12 mm. It transmits binary control signals from the automation device to the connected actuators (e.g., magnetic valves, contactors, transmitters, relays or other electrical loads).
The module features Push-in CAGE CLAMP® connections providing push-in termination of solid conductors.
A green LED indicates the switched status of each channel.
Field and system levels are electrically isolated.

An operating tool with a 2.5 mm blade (210-719) is required to open the Push-in CAGE CLAMP® connections.

The module is ideally suited for operation in harsh environmental conditions:
- strongly extended temperature range
- higher dielectric strength and EMC resistance
- higher vibration and shock resistance

Description	Item No.	Pack. Unit
8DO 24VDC 0.5A, 2-wire connection /XTR	**750-1515/040-000**	1
Interference-free for use in safety functions (see manual)		

Accessories		Item No.	Pack. Unit
Miniature WSB Quick marking system			
	plain	**248-501**	5
	with marking	see Section 11	
Operating tool, with partially insulated shaft, type 1, blade (2.5 x 0.4) mm		**210-719**	50

Approvals

Conformity marking	CE
Korea Certification	
Marine applications	GL
UL 508	
ANSI/ISA 12.12.01	Class I, Div. 2, Grp. ABCD, T4

Technical Data

Wire connection	Push-in CAGE CLAMP®
Cross sections	0.25 mm² ... 1.5 mm² / AWG 24 ... 16
Strip lengths	8 ... 9 mm / 0.33 in
Dimensions (mm) W x H x L	12 x 62 x 100
	Height from upper-edge of DIN 35 rail
Weight	48 g
Operating temperature	-40 °C ... +70 °C
Storage temperature	-40 °C ... +85 °C
Relative humidity	95 %, short-term condensation acc. to class 3K7 / IEC EN 60721-3-3 (except wind-driven precipitation, water and ice formation)
Operating altitude	without temperature derating: 0 m ... 2000 m; with temperature derating: 2000 m ... 5000 m (0.5 K/100 m); max.: 5000 m

Technical Data

No. of outputs	8
Output type	High-side switching
Type of load	Inductive, resistive loads and lamps
Max. switching frequency	1 kHz
Output current (max.)	0.5 A, short-circuit protected
Max. current consumption (internal)	20 mA
Current consumption typ. (field side)	15 mA
Voltage via power jumper contacts	24 VDC
under laboratory conditions +15 °C ... +35 °C	18 V ... 31.2 V (17.4 V ... 31.2 V)[1)]
for -40 °C ... +55 °C	18 V ... 28.8 V (17.4 V ... 28.8 V)[1)]
for +55 °C ... +70 °C	18 V ... 26.4 V (17.4 V ... 26.4 V)[1)]
	[1)] including residual ripple of 15 %
Current via power jumper contacts (max.)	10 A
Rated surge voltage	1 kV
Bit width	8 bits
Vibration resistance	acc. to IEC 60068-2-6 (acceleration: 5g), EN 60870-2-2, IEC 60721-3-1, -3, EN 61131-2
Shock resistance	acc. to IEC 60068-2-27
EMC immunity of interference	acc. to EN 61000-6-1, -2, EN 61131-2, marine applications, EN 50121-3-2, -4, -5, EN 60255-26, EN 60870-2-1, EN 61850-3, IEC 61000-6-5, IEEE 1613, VDEW: 1994
EMC emission of interference	acc. to EN 61000-6-3, -4, EN 61131-2, EN 60255-26, marine applications, EN 60870-2-1, EN 61850-3, EN 50121-3-2, -4, -5

2-Channel Relay Output Module 230 VAC, 1.0 A

for eXTReme environmental conditions, potential-free, 2 changeover contacts

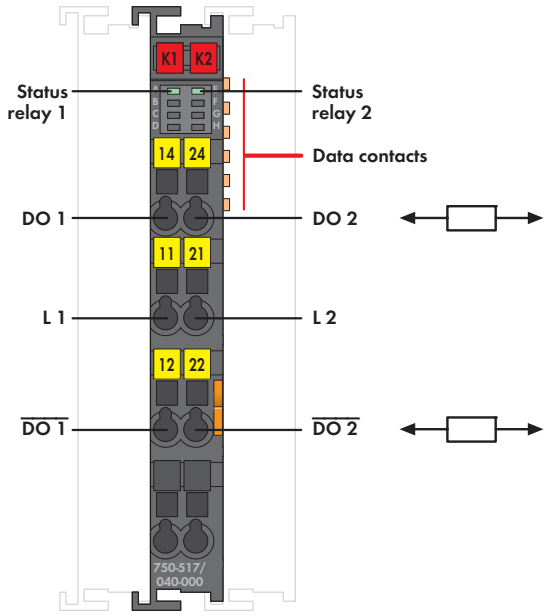

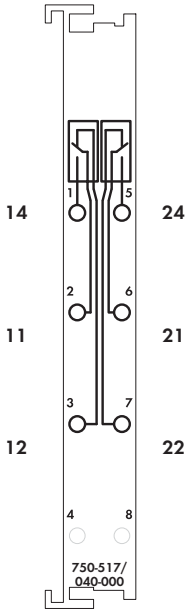

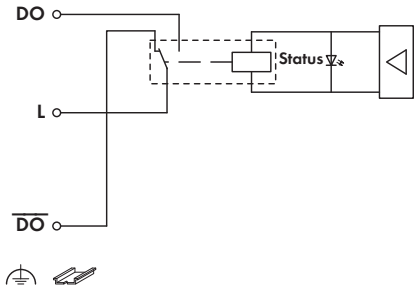

This digital output module transmits control signals from the automation device to the connected actuators.
The internal system voltage triggers the relay.
The NO contacts are electrically isolated.
The switched status of the relay is shown by a LED.

The module is ideally suited for operation in harsh environmental conditions:
- strongly extended temperature range
- higher dielectric strength and EMC resistance
- higher vibration and shock resistance

Description	Item No.	Pack. Unit
2DO 230VAC 1.0A/ Relay 2CO/ potential-free /XTR	**750-517/040-000**	1

Accessories		Item No.	Pack. Unit
Miniature WSB Quick marking system			
	plain	**248-501**	5
	with marking	see Section 11	

Approvals

Conformity marking	CE
Korea Certification	KC
Marine applications	GL
cULus UL 508	
cULus ANSI/ISA 12.12.01	Class I, Div. 2, Grp. ABCD, T4

Technical Data

Wire connection	CAGE CLAMP®
Cross sections	0.25 mm² ... 2.5 mm² / AWG 24 ... 14
Strip lengths	8 ... 9 mm / 0.33 in
Dimensions (mm) W x H x L	12 x 62 x 100
	Height from upper-edge of DIN 35 rail
Weight	52.5 g
Operating temperature	-40 °C ... +70 °C
Storage temperature	-40 °C ... +85 °C
Relative humidity	95 %, short-term condensation acc. to class
	3K7 / IEC EN 60721-3-3 (except wind-driven precipitation, water and ice formation)
Operating altitude	without temperature derating: 0 m ... 2000 m; with temperature derating: 2000 m ... 5000 m (0.5 K/100 m); max.: 5000 m

Technical Data

No. of outputs	2 changeover contacts
Max. switching frequency	6/min (at nominal load)
Pull-in time (max.)	8 ms
Drop-out time (max.)	4 ms
Contact material	Silver alloy
Mechanical life (min.)	5 x 10^6 (180 switching cycles/min.)
Electrical life (min.)	1 x 10^6 (1 A AC/250 V) (resistive load)
Max. switching voltage	250 VAC / 300 VDC
Min. switching current	100 mA / 12 VDC
Max. switching current	1A AC; 1 A at 40 VDC; 0.15 A at 300 VDC
Max. current consumption (internal)	90 mA
Rated surge voltage	5.0 kV (EN 60870-2-1 / Class VW3); 6.0 kV (UL 508); 6.0 kV (EN 60664-1 / up to 4,000 m above sea level); 4.0 kV (EN 60664-1 / > 4,000 m up to 5,000 m above sea level)
Overvoltage category	Nominal voltage 230 V: IV (EN 60664-1 / up to 4,000 m above sea level); III (EN 60664-1 / > 4,000 m up to 5,000 m above sea level)
Degree of pollution	2 (EN 60664-1)
Internal bit width	2-bit output
Vibration resistance	acc. to IEC 60068-2-6 (acceleration: 5g), EN 60870-2-2, IEC 60721-3-1, -3, EN 61131-2
Shock resistance	acc. to IEC 60068-2-27
EMC immunity of interference	acc. to EN 61000-6-1, -2, EN 61131-2, marine applications, EN 50121-3-2, -4, -5, EN 60255-26, EN 60870-2-1, EN 61850-3, IEC 61000-6-5, IEEE 1613, VDEW: 1994
EMC emission of interference	acc. to EN 61000-6-3, -4, EN 61131-2, EN 60255-26, marine applications, EN 60870-2-1, EN 61850-3, EN 50121-3-2, -4, -5

4-Channel Analog Input Module 0/4-20 mA

for eXTReme environmental conditions; single-ended

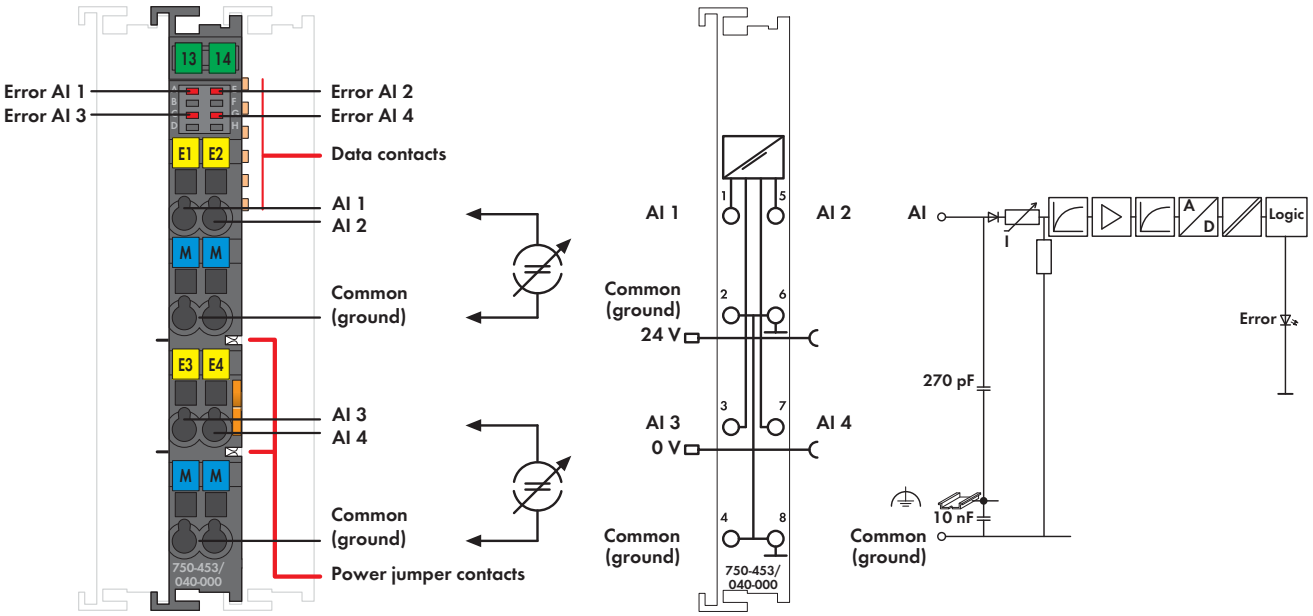

The analog input module processes standard 0/4–20 mA signals.
The input signal is electrically isolated and transmitted with a resolution of 12 bits.
The internal system supply powers the module.
The input channels of the module have a common ground potential.

The module is ideally suited for operation in harsh environmental conditions:
- strongly extended temperature range
- higher dielectric strength and EMC resistance
- higher vibration resistance

Description	Item No.	Pack. Unit
4AI 0-20mA S.E. /XTR	**750-453/040-000**	1
4AI 4-20mA S.E. /XTR	**750-455/040-000**	1

Accessories		Item No.	Pack. Unit
Miniature WSB Quick marking system			
	plain	**248-501**	5
	with marking	see Section 11	

Approvals

Conformity marking	CE
Korea Certification	
Marine applications	GL
UL 508	
ANSI/ISA 12.12.01	Class I, Div. 2, Grp. ABCD, T4

Technical Data

Wire connection	CAGE CLAMP®
Cross sections	0.25 mm² ... 2.5 mm² / AWG 24 ... 14
Strip lengths	8 ... 9 mm / 0.33 in
Dimensions (mm) W x H x L	12 x 62 x 100
	Height from upper-edge of DIN 35 rail
Weight	51 g
Operating temperature	-40 °C ... +70 °C
Storage temperature	-40 °C ... +85 °C
Relative humidity	95 %, short-term condensation acc. to class 3K7 / IEC EN 60721-3-3 (except wind-driven precipitation, water and ice formation)
Operating altitude	without temperature derating: 0 m ... 2000 m; with temperature derating: 2000 m ... 5000 m (0.5 K/100 m); max.: 5000 m

Technical Data

Number of inputs	4
Signal characteristic	Single ended
Signal current	0 mA ... 20 mA (750-453/040-000)
	4 mA ... 20 mA (750-455/040-000)
Input voltage (max.)	32 V
Input resistance	< 100 Ω/ 20 mA
Conversion time (typ.)	10 ms
Resolution	12 bits
Measuring error (25 °C)	< ± 0.1 % of the full scale value
Temperature coefficient	< ± 0.01 % / K of the full scale value
Current consumption (internal)	65 mA
Voltage via power jumper contacts	24 VDC
under laboratory conditions +15 °C ... +35 °C	18 V ... 31.2 V (17.4 V ... 31.2 V)[1]
for -40 °C ... +55 °C	18 V ... 28.8 V (17.4 V ... 28.8 V)[1]
for +55 °C ... +70 °C	18 V ... 26.4 V (17.4 V ... 26.4 V)[1]
	[1] including residual ripple of 15 %
Current via power jumper contacts (max.)	10 A
Rated surge voltage	1 kV
Bit width	4 x 16 bits data
	4 x 8 bits control/status (optional)
EMC immunity of interference	acc. to EN 61000-6-1, -2, EN 61131-2, marine applications, EN 50121-3-2, -4, -5, EN 60255-26, EN 60870-2-1, EN 61850-3, IEC 61000-6-5, IEEE 1613, VDEW: 1994
EMC emission of interference	acc. to EN 61000-6-3, -4, EN 61131-2, EN 60255-26, marine applications, EN 60870-2-1, EN 61850-3, EN 50121-3-2, -4, -5
Vibration resistance	acc. to IEC 60068-2-6 (acceleration: 5g), EN 60870-2-2, IEC 60721-3-1, -3, EN 61131-2
Shock resistance	acc. to IEC 60068-2-27

4-Channel Analog Input Module 0-10 V

for eXTReme environmental conditions; single-ended

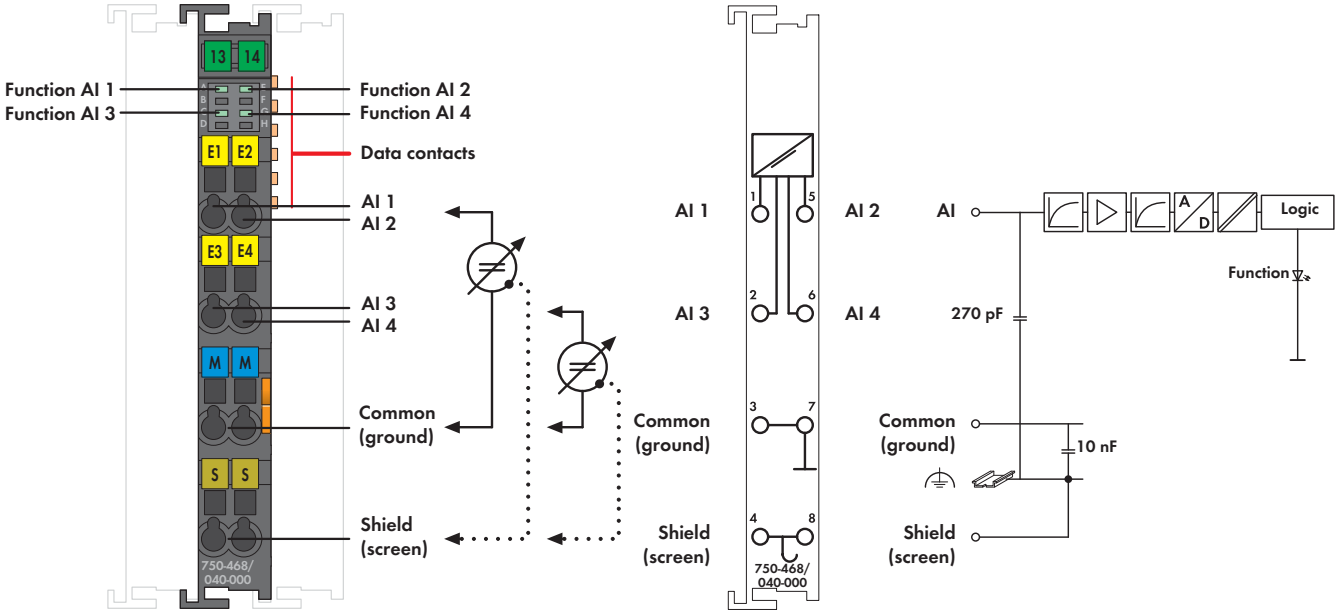

The analog input module processes standard 0–10 V signals.
The input signal is electrically isolated and transmitted with a resolution of 12 bits.
The internal system supply powers the module.
The input channels of the module have a common ground potential.
The shield (screen) is directly connected to the DIN rail.

The module is ideally suited for operation in harsh environmental conditions:
- strongly extended temperature range
- higher dielectric strength and EMC resistance
- higher vibration and shock resistance

Description	Item No.	Pack. Unit
4AI 0-10V DC S.E. /XTR	**750-468/040-000**	1

Accessories		Item No.	Pack. Unit
Miniature WSB Quick marking system			
	plain	**248-501**	5
	with marking	see Section 11	

Approvals

Conformity marking	CE
Korea Certification	
Marine applications	GL
cULus UL 508	
cULus ANSI/ISA 12.12.01	Class I, Div. 2, Grp. ABCD, T4

Technical Data

Wire connection	CAGE CLAMP®
Cross sections	0.25 mm² ... 2.5 mm² / AWG 24 ... 14
Strip lengths	8 ... 9 mm / 0.33 in
Dimensions (mm) W x H x L	12 x 62 x 100
	Height from upper-edge of DIN 35 rail
Weight	52.5 g
Operating temperature	-40 °C ... +70 °C
Storage temperature	-40 °C ... +85 °C
Relative humidity	95 %, short-term condensation acc. to class 3K7 / IEC EN 60721-3-3 (except wind-driven precipitation, water and ice formation)
Operating altitude	without temperature derating: 0 m ... 2000 m; with temperature derating: 2000 m ... 5000 m (0.5 K/100 m); max.: 5000 m

Technical Data

Number of inputs	4
Signal characteristic	Single ended
Signal voltage	0 V ... 10 V
Input voltage (max.)	35 V
Internal resistance	133 kΩ
Conversion time (typ.)	4 ms
Resolution	12 bits
Measuring error (25 °C)	< ± 0.2 % of the full scale value
Temperature coefficient	< ± 0.01 % / K of the full scale value
Current consumption typ. (internal)	60 mA
Rated surge voltage	1 kV
Bit width	4 x 16 bits data
	4 x 8 bits control/status (optional)
EMC immunity of interference	acc. to EN 61000-6-1, -2, EN 61131-2, marine applications, EN 50121-3-2, -4, -5, EN 60255-26, EN 60870-2-1, EN 61850-3, IEC 61000-6-5, IEEE 1613, VDEW: 1994
EMC emission of interference	acc. to EN 61000-6-3, -4, EN 61131-2, EN 60255-26, marine applications, EN 60870-2-1, EN 61850-3, EN 50121-3-2, -4, -5
Vibration resistance	acc. to IEC 60068-2-6 (acceleration: 5g), EN 60870-2-2, IEC 60721-3-1, -3, EN 61131-2
Shock resistance	acc. to IEC 60068-2-27

4-Channel Analog Input Module ±10 V

for eXTReme environmental conditions; single-ended

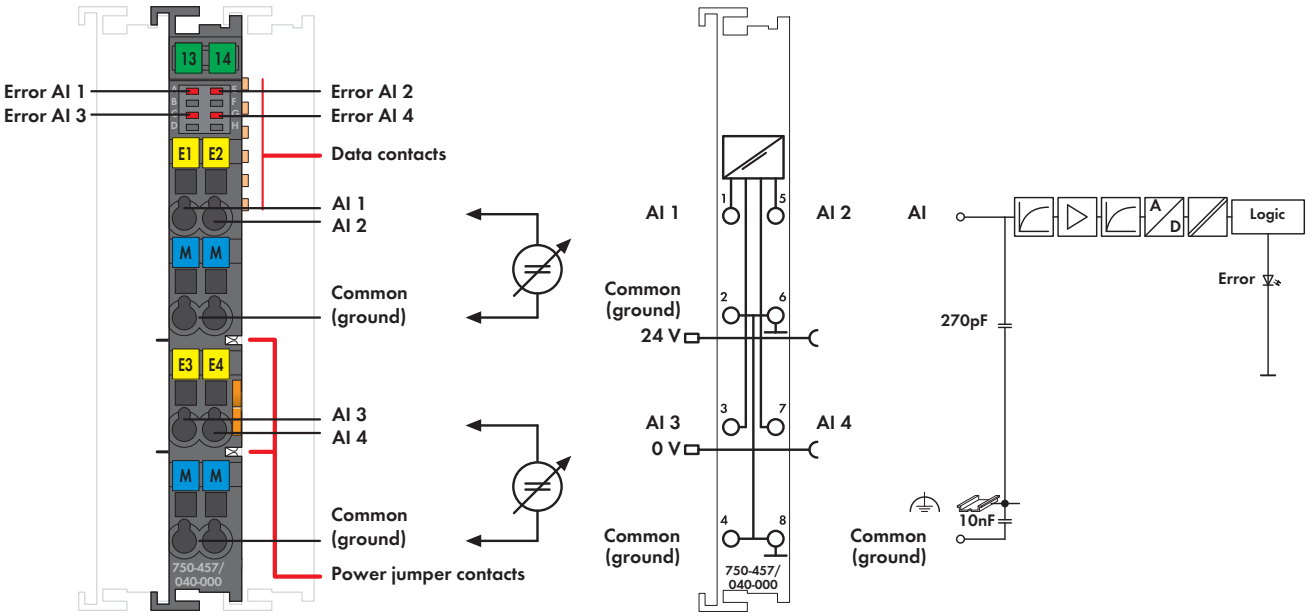

This analog input module processes standard ±10 V signals.
The input signal is electrically isolated and transmitted with a resolution of 12 bits.
The internal system supply powers the module.
The input channels of the module have a common ground potential.

The module is ideally suited for operation in harsh environmental conditions:
- strongly extended temperature range
- higher dielectric strength and EMC resistance
- higher vibration and shock resistance

Description	Item No.	Pack. Unit
4AI ±10VDC S.E. /XTR	**750-457/040-000**	1

Accessories		Item No.	Pack. Unit
Miniature WSB Quick marking system			
	plain	**248-501**	5
	with marking	see Section 11	

Approvals

Conformity marking	CE
Korea Certification	
Marine applications	GL
UL 508	
ANSI/ISA 12.12.01	Class I, Div. 2, Grp. ABCD, T4

Technical Data

Wire connection	CAGE CLAMP®
Cross sections	0.25 mm² ... 2.5 mm² / AWG 24 ... 14
Strip lengths	8 ... 9 mm / 0.33 in
Dimensions (mm) W x H x L	12 x 62 x 100
	Height from upper-edge of DIN 35 rail
Weight	50.5 g
Operating temperature	-40 °C ... +70 °C
Storage temperature	-40 °C ... +85 °C
Relative humidity	95 %, short-term condensation acc. to class 3K7 / IEC EN 60721-3-3 (except wind-driven precipitation, water and ice formation)
Operating altitude	without temperature derating: 0 m ... 2000 m; with temperature derating: 2000 m ... 5000 m (0.5 K/100 m); max.: 5000 m

Technical Data

Number of inputs	4
Signal characteristic	Single ended
Signal voltage	± 10 V
Input voltage (max.)	± 40 V
Input resistance	> 100 kΩ
Conversion time (typ.)	10 ms
Resolution	12 bits
Measuring error (25 °C)	< ± 0.1 % of the full scale value
Temperature coefficient	< ± 0.01 % / K of the full scale value
Current consumption (internal)	65 mA
Voltage via power jumper contacts	24 VDC
under laboratory conditions +15 °C ... +35 °C	18 V ... 31.2 V (17.4 V ... 31.2 V)[1]
for -40 °C ... +55 °C	18 V ... 28.8 V (17.4 V ... 28.8 V)[1]
for +55 °C ... +70 °C	18 V ... 26.4 V (17.4 V ... 26.4 V)[1]
	[1] including residual ripple of 15 %
Current via power jumper contacts (max.)	10 A
Rated surge voltage	1 kV
Bit width	4 x 16 bits data
	4 x 8 bits control/status (optional)
EMC immunity of interference	acc. to EN 61000-6-1, -2, EN 61131-2, marine applications, EN 50121-3-2, -4, -5, EN 60255-26, EN 60870-2-1, EN 61850-3, IEC 61000-6-5, IEEE 1613, VDEW: 1994
EMC emission of interference	acc. to EN 61000-6-3, -4, EN 61131-2, EN 60255-26, marine applications, EN 60870-2-1, EN 61850-3, EN 50121-3-2, -4, -5
Vibration resistance	acc. to IEC 60068-2-6 (acceleration: 5g), EN 60870-2-2, IEC 60721-3-1, -3, EN 61131-2
Shock resistance	acc. to IEC 60068-2-27

2-/4-Channel Analog Input Module for RTDs

for eXTReme environmental conditions

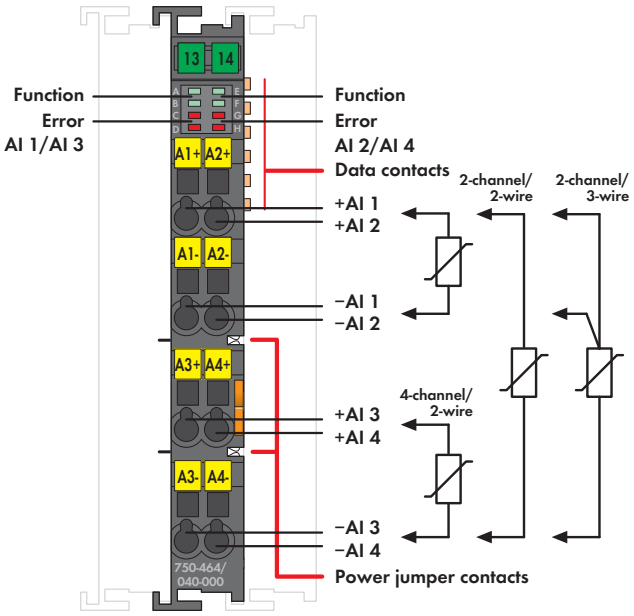

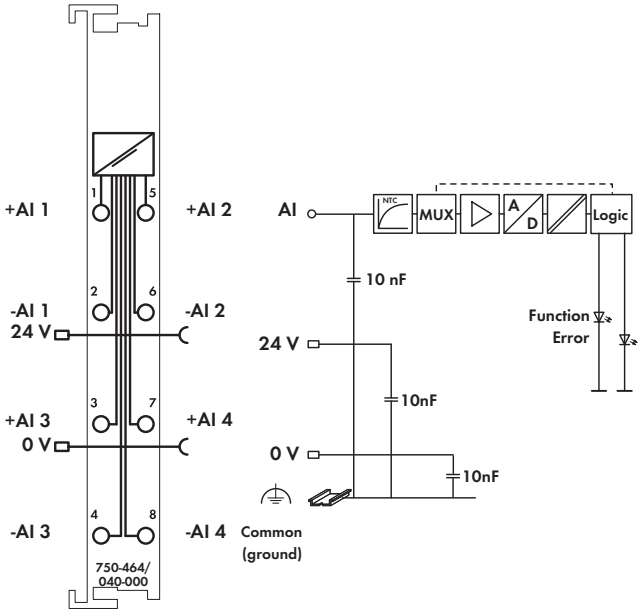

The input module directly connects to Pt or Ni resistance sensors and potentiometers.
It can be operated as a 2-channel (2- and 3-wire technology) or 4-channel (2-wire technology) module.
The bus module linearizes the entire temperature range. A sensor error (short circuit, line break or measuring range overflow) is indicated by a red LED.
The module can be configured via WAGO-I/O-CHECK or GSD files.
The module features multiple setting options and high accuracy.

The module is ideally suited for operation in harsh environmental conditions:
- strongly extended temperature range
- higher dielectric strength and EMC resistance
- higher vibration and shock resistance

Description	Item No.	Pack. Unit
2/4 AI RTD configurable /XTR	**750-464/040-000**	1

Accessories	Item No.	Pack. Unit
Miniature WSB Quick marking system		
plain	**248-501**	5
with marking see Section 11		

Approvals

Conformity marking	CE
Korea Certification	KC
Marine applications	GL
cULus UL 508	
cULus ANSI/ISA 12.12.01	Class I, Div. 2, Grp. ABCD, T4

Technical Data

Wire connection	CAGE CLAMP®
Cross sections	0.25 mm² ... 2.5 mm² / AWG 24 ... 14
Strip lengths	8 ... 9 mm / 0.33 in
Dimensions (mm) W x H x L	12 x 62 x 100
Weight	47.3 g
Operating temperature	-40 °C ... +70 °C
Storage temperature	-40 °C ... +85 °C
Relative humidity	95 %, short-term condensation acc. to class 3K7 / IEC EN 60721-3-3 (except wind-driven precipitation, water and ice formation)
Operating altitude	without temperature derating: 0 m ... 2000 m; with temperature derating: 2000 m ... 5000 m (0.5 K/100 m); max.: 5000 m
EMC immunity of interference	acc. to EN 61000-6-1, -2, EN 61131-2, marine applications, EN 50121-3-2, -4, -5, EN 60255-26, EN 60870-2-1, EN 61850-3, IEC 61000-6-5, IEEE 1613, VDEW: 1994
EMC emission of interference	acc. to EN 61000-6-3, -4, EN 61131-2, EN 60255-26, marine applications, EN 60870-2-1, EN 61850-3, EN 50121-3-2, -4, -5

Technical Data

Number of inputs	2 / 4 (default setting)
Sensor types	Pt100 (default), Pt200, Pt500, Pt1000 (IEC 751), Ni100, Ni1000 (DIN 43760), Ni120 (Minco), Ni1000 (TK 5000), 2-channel operation: potentiometer, resistance measurement 10 Ω ... 5000 Ω, 10 Ω ... 1200 Ω
Sensor connection	2-conductor (default setting), 3-conductor (2-channel operation)
Measuring current (typ.)	≤ 350 µA per measurement circuit
Measurement repetition rate (standard)	1.1 s
Measurement repetition rate (2-channel/2-conductor)	0.63 s
Response time (max.)	4 s
Resolution	16 bits (0.1 °C)
Conversion time	≤ 320 ms
Measuring error (25 °C)	≤ 1 K in the entire temp. range, ≤ 0.5 K in the restricted temp. range (-30 °C ... +120 °C)
Accuracy (+25 °C)	≤ ± 0.2% of full scale value; typ.: ≤ ± 0.1% of full scale value
Temperature coefficient	≤ 20 ppm/K; typ. ≤ 15 ppm/K
Current consumption typ. (internal)	50 mA
Voltage via power jumper contacts	24 VDC
under laboratory conditions +15 °C ... +35 °C	18 V ... 31.2 V (17.4 V ... 31.2 V)[1]
for -40 °C ... +55 °C	18 V ... 28.8 V (17.4 V ... 28.8 V)[1]
for +55 °C ... +70 °C	18 V ... 26.4 V (17.4 V ... 26.4 V)[1]
	[1] including residual ripple of 15 %
Current via power jumper contacts (max.)	10 A
Rated surge voltage	1 kV
Bit width	4 (2) x 16 bits data 4 (2) x 8 bits control/status (option)
Vibration resistance	acc. to IEC 60068-2-6 (acceleration: 5g), EN 60870-2-2, IEC 60721-3-1, -3, EN 61131-2
Shock resistance	acc. to IEC 60068-2-27

2-Channel Analog Input Module for Thermocouples

for eXTReme environmental conditions

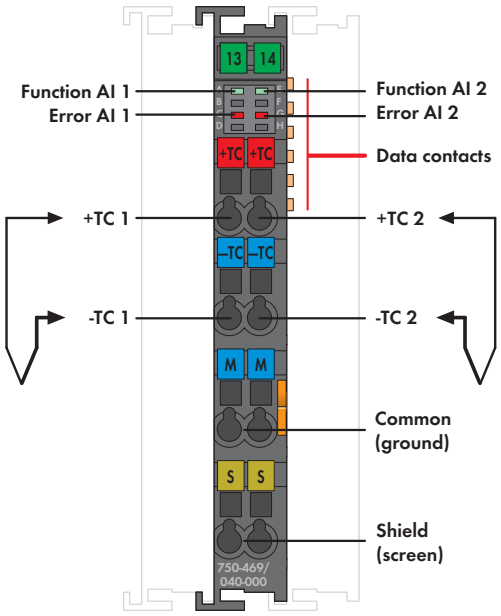

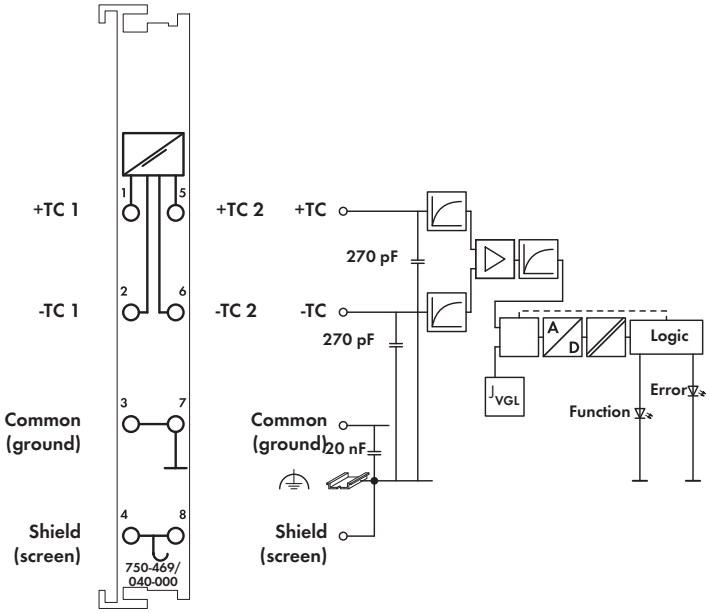

This input module directly connects to two thermocouples. Internal electrical isolation allows operation of grounded sensors.
The bus module linearizes the entire temperature range.
Cold junction compensation mitigates the clamping unit offset voltage over the 0–55 °C operating range.
A line break is indicated by a red LED. A green LED indicates readiness for operation and error-free communication with the bus coupler.
The shield (screen) is directly connected to the DIN rail.

The module is ideally suited for operation in harsh environmental conditions:
- strongly extended temperature range
- higher dielectric strength and EMC resistance
- higher vibration and shock resistance

Description	Item No.	Pack. Unit
2AI Thermocouple/configurable /XTR	**750-469/040-000**	1

Accessories	Item No.	Pack. Unit
Miniature WSB Quick marking system		
plain	**248-501**	5
with marking see Section 11		

Approvals

Conformity marking	CE
Korea Certification	
Marine applications	GL
UL 508	
ANSI/ISA 12.12.01	Class I, Div. 2, Grp. ABCD, T4

Technical Data

Wire connection	CAGE CLAMP®
Cross sections	0.25 mm² ... 2.5 mm² / AWG 24 ... 14
Strip lengths	8 ... 9 mm / 0.33 in
Dimensions (mm) W x H x L	12 x 62 x 100; Height from upper-edge of DIN 35 rail
Weight	38.2 g
Operating temperature	-40 °C ... +70 °C
Storage temperature	-40 °C ... +85 °C
Relative humidity	95 %, short-term condensation acc. to class 3K7 / IEC EN 60721-3-3 (except wind-driven precipitation, water and ice formation)
Operating altitude	without temperature derating: 0 m ... 2000 m; with temperature derating: 2000 m ... 5000 m (0.5 K/100 m); max.: 5000 m
EMC immunity of interference	acc. to EN 61000-6-1, -2, EN 61131-2, marine applications, EN 50121-3-2, -4, -5, EN 60255-26, EN 60870-2-1, EN 61850-3, IEC 61000-6-5, IEEE 1613, VDEW: 1994
EMC emission of interference	acc. to EN 61000-6-3, -4, EN 61131-2, EN 60255-26, marine applications, EN 60870-2-1, EN 61850-3, EN 50121-3-2, -4, -5

Technical Data

Number of inputs	2
Sensor types	Type L: -100 °C ... +900 °C;
	Type K: -100 °C ... +1370 °C;
	Type J: -100 °C ... +1200 °C;
	Type E: -100 °C ... +1000 °C;
	Type T: -100 °C ... +400 °C;
	Type N: -100 °C ... +1300 °C;
	Type U: -25 °C ... +600 °C;
	Type B: +600 °C ... +1800 °C;
	Type R: 0 °C ... +1700 °C;
	Type S: -50 °C ... +1700 °C;
	-30 mV ... +30 mV;
	-60 mV ... +60 mV;
	-120 mV ... +120 mV
Internal resistance	1 MΩ
Cold junction compensation	at each pair of terminal blocks
Resolution (over entire range)	0.1 °C
Conversion time	320 ms (each channel)
Measuring error (25 °C)	< ± 6 K (volt. input < ± 2 K, cold junct. < ± 4 K)
Temperature coefficient	< ± 0.2 K/K
Max. admissible current between the ground contacts 3 and 7: 100 mA	
Max. current consumption (internal)	65 mA
Rated surge voltage	1 kV
Bit width	2 x 16 bits data
	2 x 8 bits control/status (optional)
Vibration resistance	acc. to IEC 60068-2-6 (acceleration: 5g), EN 60870-2-2, IEC 60721-3-1, -3, EN 61131-2
Shock resistance	acc. to IEC 60068-2-27

2-Channel Analog Output Module, 0/4 ... 20 mA / 6 ... 18 VDC

for eXTReme environmental conditions; 16-bit, configurable

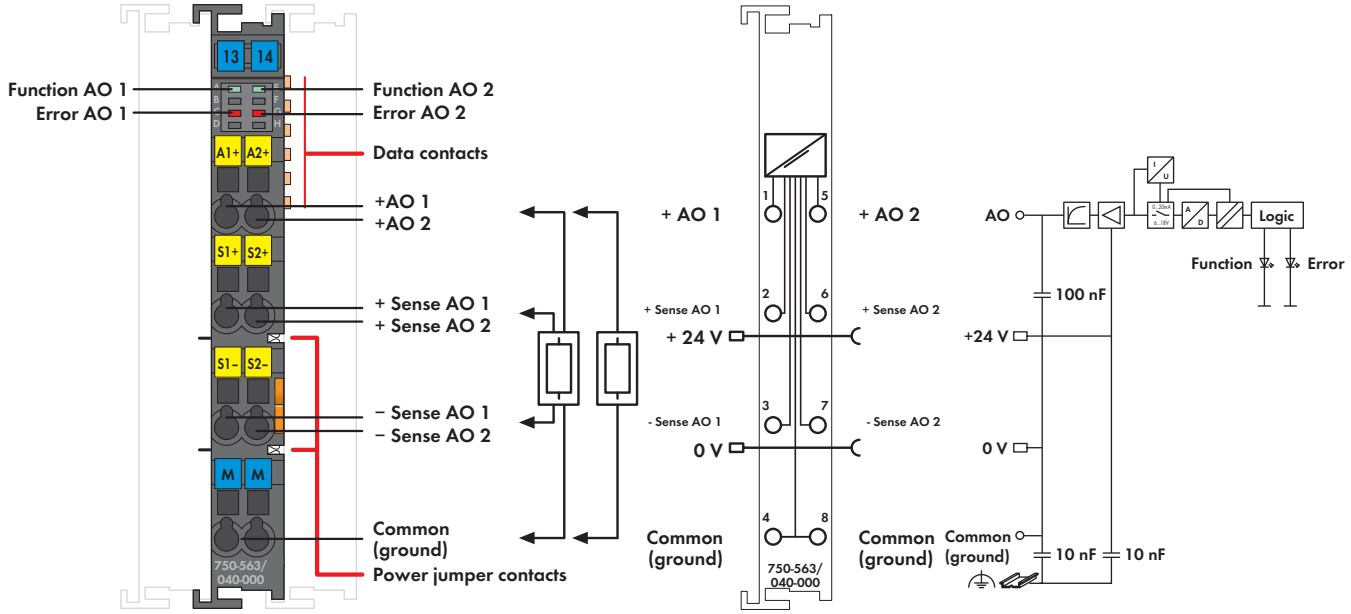

This analog output module generates 0/4–20 mA output currents or 6–18 V output voltages for the field.
Output ranges can be configured via WAGO-I/O-CHECK or GSD files.
The module has two short-circuit-proof output channels and enables direct connection of two 2-wire actuators to AO 1 and ground or AO2 and ground.
Signals are output via AO 1 or AO 2. In addition, the sense lines from 4-wire actuators can be connected to -Sense AO1 and +Sense AO1 or -Sense AO2 and +Sense AO2.
Both output channels have a common ground potential.

The output signal is electrically isolated and transmitted with a resolution of 16 bits. Both internal system and field side supply power the module.

The module is ideally suited for operation in harsh environmental conditions:
- strongly extended temperature range
- higher dielectric strength and EMC resistance
- higher vibration and shock resistance

Description	Item No.	Pack. Unit
2 AO 0/4-20mA / 6-18VDC configurable / XTR	**750-563/040-000**	1

Accessories		Item No.	Pack. Unit
Miniature WSB Quick marking system			
	plain	**248-501**	5
	with marking	see Section 11	

Approvals

Conformity marking	CE
Korea Certification	KC
Marine applications	GL
cULus UL 508	
cULus ANSI/ISA 12.12.01	Class I, Div. 2, Grp. ABCD, T4

Technical Data

Wire connection	CAGE CLAMP®
Cross sections	0.25 mm² ... 2.5 mm² / AWG 24 ... 14
Strip lengths	8 ... 9 mm / 0.33 in
Dimensions (mm) W x H x L	12 x 62 x 100
	Height from upper-edge of DIN 35 rail
Weight	53.5 g
Operating temperature	-40 °C ... +70 °C
Storage temperature	-40 °C ... +85 °C
Relative humidity	95 %, short-term condensation acc. to class
	3K7 / IEC EN 60721-3-3 (except wind-driven
	precipitation, water and ice formation)
Operating altitude	without temperature derating: 0 m ... 2000 m;
	with temperature derating: 2000 m ... 5000 m
	(0.5 K/100 m); max.: 5000 m
Vibration resistance	acc. to IEC 60068-2-6 (acceleration: 5g),
	EN 60870-2-2, IEC 60721-3-1, -3, EN 61131-2
Shock resistance	acc. to IEC 60068-2-27

Technical Data

No. of outputs	2
Operation modes	configurable:
	0 mA ... 20 mA;
	4 mA ... 20 mA;
	6 V ... 18 V
Load impedance	> 1.8 kΩ (voltage output)
	< 500 Ω (current output)
Resolution	16 bits
Conversion time (typ.)	5 ms
Recovery time (typ.)	< 300µs
Measuring error (25 °C)	< ± 0.05 % of the scale end value
Temperature coefficient	< ± 100 ppm
Current consumption (internal)	80 mA ... 110 mA
Voltage via power jumper contacts	24 VDC
under laboratory conditions +15 °C ... +35 °C	min. ... 31.2 V[1)]
for -40 °C ... +55 °C	min. ... 28.8 V[1)]
for +55 °C ... +70 °C	min. ... 26.4 V[1)]
	min. voltage range: 21.6 V (24 V - 10 %);
	min. current range: 20.4 V (24 V - 15 %);
	[1)] including residual ripple of 15 %
Current via power jumper contacts (max.)	10 A
Rated surge voltage	1 kV
Bit width	2 x 16 bits data
	2 x 8 bits control/status (optional)
EMC immunity of interference	acc. to EN 61000-6-1, -2, EN 61131-2,
	marine applications, EN 50121-3-2, -4, -5,
	EN 60255-26, EN 60870-2-1, EN 61850-3,
	IEC 61000-6-5, IEEE 1613, VDEW: 1994
EMC emission of interference	acc. to EN 61000-6-3, -4, EN 61131-2, EN
	60255-26, marine applications, EN 60870-2-1,
	EN 61850-3, EN 50121-3-2, -4, -5

4-Channel Analog Output Module ±10 V/0-10 V

for eXTReme environmental conditions

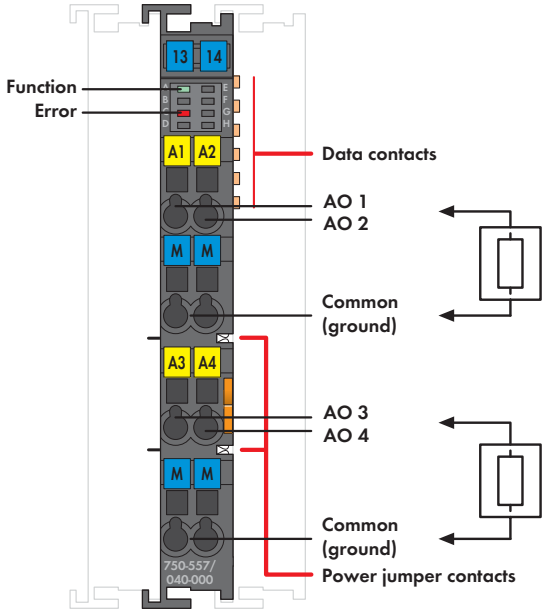

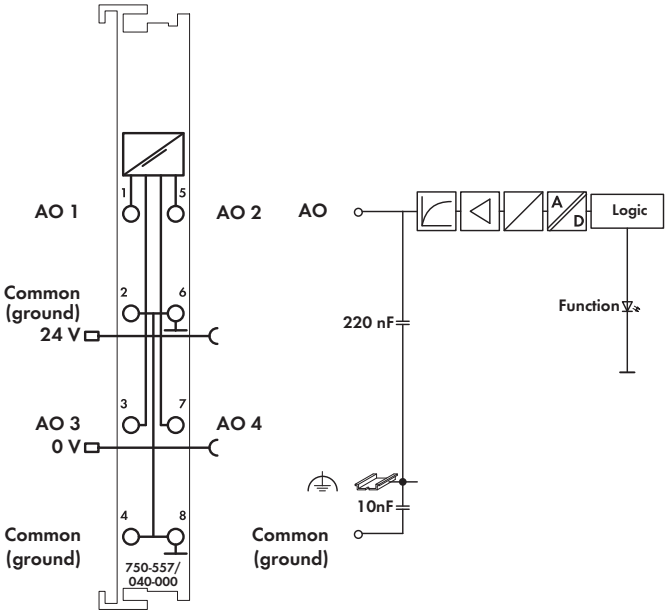

This analog output module generates standard ±10 V or 0–10 V signals.
The output signal is electrically isolated and transmitted with a resolution of 12 bits.
The internal system supply powers the module.
The output channels of the module have a common ground potential.

The module is ideally suited for operation in harsh environmental conditions:
- strongly extended temperature range
- higher dielectric strength and EMC resistance
- higher vibration and shock resistance

Description	Item No.	Pack. Unit
4AO ± 10VDC /XTR	**750-557/040-000**	1
4AO 0-10VDC /XTR	**750-559/040-000**	1

Accessories		Item No.	Pack. Unit
Miniature WSB Quick marking system			
	plain	**248-501**	5
	with marking	see Section 11	

Approvals

Conformity marking	CE
Korea Certification	KC
Marine applications	GL
cULus UL 508	
cULus ANSI/ISA 12.12.01	Class I, Div. 2, Grp. ABCD, T4

Technical Data

Wire connection	CAGE CLAMP®
Cross sections	0.25 mm² ... 2.5 mm² / AWG 24 ... 14
Strip lengths	8 ... 9 mm / 0.33 in
Dimensions (mm) W x H x L	12 x 62 x 100
	Height from upper-edge of DIN 35 rail
Weight	53.5 g
Operating temperature	-40 °C ... +70 °C
Storage temperature	-40 °C ... +85 °C
Relative humidity	95 %, short-term condensation acc. to class 3K7 / IEC EN 60721-3-3 (except wind-driven precipitation, water and ice formation)
Operating altitude	without temperature derating: 0 m ... 2000 m; with temperature derating: 2000 m ... 5000 m (0.5 K/100 m); max.: 5000 m

Technical Data

No. of outputs	4
Signal voltage	±10 V (750-557/040-000)
	0 V ... 10 V (750-559/040-000)
Load impedance	> 5 kΩ
Resolution	12 bits
Conversion time (typ.)	10 ms
Recovery time (typ.)	100ms
Measuring error (25 °C)	< ± 0.1 % of the full scale value
Temperature coefficient	< ± 0.01 % / K of the full scale value
Max. current consumption (internal)	125 mA
Voltage via power jumper contacts	24 V DC
under laboratory conditions +15 °C ... +35 °C	18 V ... 31.2 V (17.4 V ... 31.2 V)[1]
for -40 °C ... +55 °C	18 V ... 28.8 V (17.4 V ... 28.8 V)[1]
for +55 °C ... +70 °C	18 V ... 26.4 V (17.4 V ... 26.4 V)[1]
	[1] including residual ripple of 15 %
Current via power jumper contacts (max.)	10 A
Rated surge voltage	1 kV
Bit width	4 x 16 bits data
	4 x 8 bits control/status (optional)
Vibration resistance	acc. to IEC 60068-2-6 (acceleration: 5g), EN 60870-2-2, IEC 60721-3-1, -3, EN 61131-2
Shock resistance	acc. to IEC 60068-2-27
EMC immunity of interference	acc. to EN 61000-6-1, -2, EN 61131-2, marine applications, EN 50121-3-2, -4, -5, EN 60255-26, EN 60870-2-1, EN 61850-3, IEC 61000-6-5, IEEE 1613, VDEW: 1994
EMC emission of interference	acc. to EN 61000-6-3, -4, EN 61131-2, EN 60255-26, marine applications, EN 60870-2-1, EN 61850-3, EN 50121-3-2, -4, -5

Serial Interface RS-232 / RS-485

for eXTReme environmental conditions; freely configurable

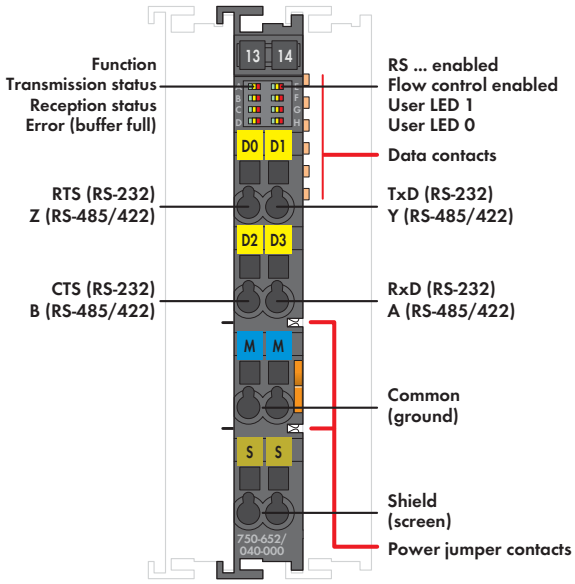

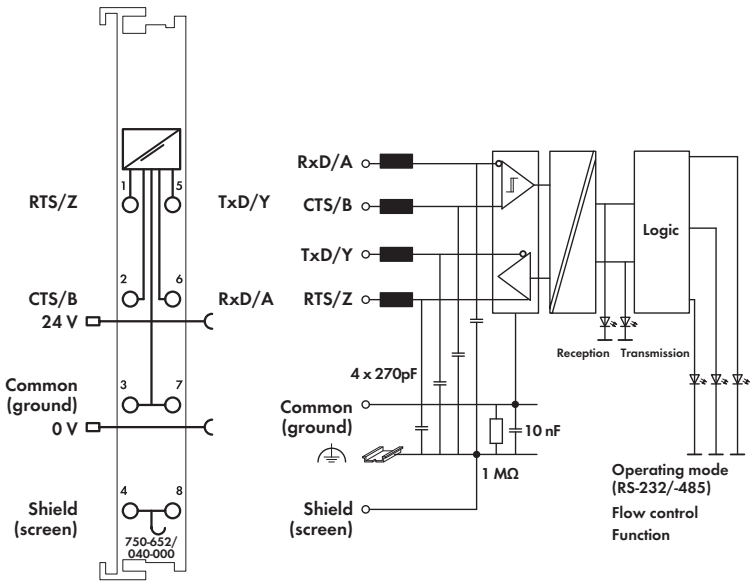

This serial interface module connects RS-485, RS-422 or RS-232 interface devices to the WAGO-I/O-SYSTEM 750. It also provides gateways between the serial interface and the fieldbus systems supported by the WAGO-I/O-SYSTEM 750. No higher protocol level is required by the module. Communication is completely transparent to the fieldbus master, which provides a wide range of applications for the serial interface module. If required, communication protocols can be configured via fieldbus master.
The 2560-byte input buffer provides for high data baud rates. At lower baud rates, the data received in lower priority tasks is evaluated without data loss.
The 512-byte output buffer provides fast transmission of larger data strings.
The module can be configured via WAGO-I/O-CHECK or GSD files. Flexible baud rate and data width selection provides perfect adaptation to the respective application

The module is ideally suited for operation in harsh environmental conditions:
- strongly extended temperature range
- higher dielectric strength and EMC resistance
- higher vibration and shock resistance

Description	Item No.	Pack. Unit
RS-232/RS-485 freely configurable /XTR	**750-652/040-000**	1

Accessories		Item No.	Pack. Unit
Miniature WSB Quick marking system			
	plain	**248-501**	5
	with marking	see Section 11	

Approvals

Conformity marking	CE
Korea Certification	
Marine applications	GL
UL 508	
ANSI/ISA 12.12.01	Class I, Div. 2, Grp. ABCD, T4

Technical Data

Wire connection	CAGE CLAMP®
Cross sections	0.25 mm² ... 2.5 mm² / AWG 24 ... 14
Strip lengths	8 ... 9 mm / 0.33 in
Dimensions (mm) W x H x L	12 x 62 x 100
	Height from upper-edge of DIN 35 rail
Weight	51 g
Operating temperature	-40 °C ... +70 °C
Storage temperature	-40 °C ... +85 °C
Relative humidity	95 %, short-term condensation acc. to class 3K7 / IEC EN 60721-3-3 (except wind-driven precipitation, water and ice formation)
Operating altitude	without temperature derating: 0 m ... 2000 m; with temperature derating: 2000 m ... 5000 m (0.5 K/100 m); max.: 5000 m

Technical Data

Transmission channels	1 TxD / 1 RxD, full duplex, half duplex 7 or 8 bit data, 1 or 2 stop bit
Baud rate	9,600 baud (default setting) 300 baud ... 115,200 baud
Bit transfer	RS-485/-422: ISO 8482 / DIN 66259 - 4; RS-232: EIA/TIA-232-F
Line length	RS-485/-422: max. approx. 1000 m, RS-232: max. 40 m, data exchange mode/ DMX: max. 100 m twisted-pair cable
Buffer	2560 bytes for reception / 512 bytes for transmission
Internal bit width	8, 24 or 48 bytes (parametrizable)
Current consumption (internal)	85 mA
Voltage via power jumper contacts	24 VDC
under laboratory conditions +15 °C ... +35 °C	18 V ... 31.2 V (17.4 V ... 31.2 V)[1]
for -40 °C ... +55 °C	18 V ... 28.8 V (17.4 V ... 28.8 V)[1]
for +55 °C ... +70 °C	18 V ... 26.4 V (17.4 V ... 26.4 V)[1]
	[1] including residual ripple of 15 %
Current via power jumper contacts (max.)	10 A
Rated surge voltage	1 kV
EMC immunity of interference	acc. to EN 61000-6-1, -2, EN 61131-2, marine applications, EN 50121-3-2, -4, -5, EN 60255-26, EN 60870-2-1, EN 61850-3, IEC 61000-6-5, IEEE 1613, VDEW: 1994
EMC emission of interference	acc. to EN 61000-6-3, -4, EN 61131-2, EN 60255-26, marine applications, EN 60870-2-1, EN 61850-3, EN 50121-3-2, -4, -5
Vibration resistance	acc. to IEC 60068-2-6 (acceleration: 5g), EN 60870-2-2, IEC 60721-3-1, -3, EN 61131-2
Shock resistance	acc. to IEC 60068-2-27

Supply Module 24 VDC

for eXTReme environmental conditions; passive

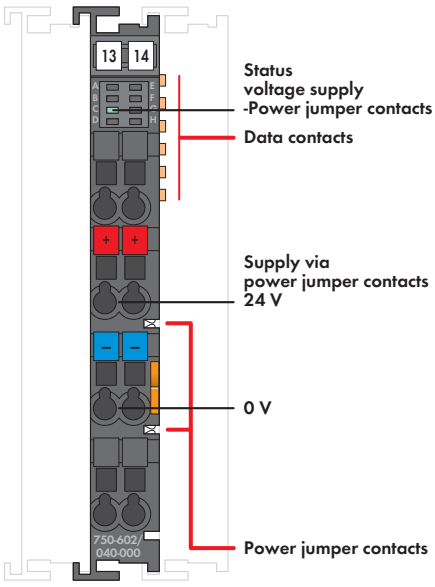

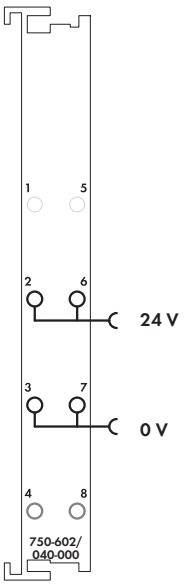

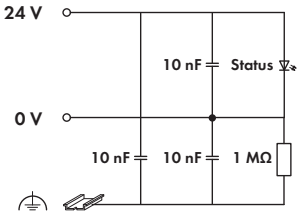

This supply module provides the I/O modules with the corresponding supply potential.
Maximum available supply current to all connected modules is 10 A. When configuring the system, it must be ensured that this total current is not exceeded. Should higher currents be necessary, an intermediate supply module must be added to the assembly.

The module is ideally suited for operation in harsh environmental conditions:
- strongly extended temperature range
- higher dielectric strength and EMC resistance
- higher vibration and shock resistance

Description	Item No.	Pack. Unit
24VDC Power Supply /XTR	**750-602/040-000**	1

Accessories		Item No.	Pack. Unit
Miniature WSB Quick marking system			
	plain	**248-501**	5
	with marking	see Section 11	

Approvals

Conformity marking	CE
Korea Certification	
Marine applications	GL
UL 508	
ANSI/ISA 12.12.01	Class I, Div. 2, Grp. ABCD, T4

Technical Data

Wire connection	CAGE CLAMP®
Cross sections	0.25 mm² ... 2.5 mm² / AWG 24 ... 14
Strip lengths	8 ... 9 mm / 0.33 in
Dimensions (mm) W x H x L	12 x 62 x 100
	Height from upper-edge of DIN 35 rail
Weight	44.1 g
Operating temperature	-40 °C ... +70 °C
Storage temperature	-40 °C ... +85 °C
Relative humidity	95 %, short-term condensation acc. to class 3K7 / IEC EN 60721-3-3 (except wind-driven precipitation, water and ice formation)
Operating altitude	without temperature derating: 0 m ... 2000 m; with temperature derating: 2000 m ... 5000 m (0.5 K/100 m); max.: 5000 m

Technical Data

Power supply	via CAGE CLAMP® connections, 24 VDC
under laboratory conditions +15 °C ... +35 °C	18 V ... 31.2 V (17.4 V ... 31.2 V)[1]
for -40 °C ... +55 °C	18 V ... 28.8 V (17.4 V ... 28.8 V)[1]
for +55 °C ... +70 °C	18 V ... 26.4 V (17.4 V ... 26.4 V)[1]
	[1] including residual ripple of 15 %
Voltage via power jumper contacts	24 V DC
Current via power jumper contacts (max.)	10 A
Rated surge voltage	1 kV
Vibration resistance	acc. to IEC 60068-2-6 (acceleration: 5g), EN 60870-2-2, IEC 60721-3-1, -3, EN 61131-2
Shock resistance	acc. to IEC 60068-2-27
EMC immunity of interference	acc. to EN 61000-6-1, -2, EN 61131-2, marine applications, EN 50121-3-2, -4, -5, EN 60255-26, EN 60870-2-1, EN 61850-3, IEC 61000-6-5, IEEE 1613, VDEW: 1994
EMC emission of interference	acc. to EN 61000-6-3, -4, EN 61131-2, EN 60255-26, marine applications, EN 60870-2-1, EN 61850-3, EN 50121-3-2, -4, -5

Supply Module 230 V AC/DC

for eXTReme environmental conditions; passive

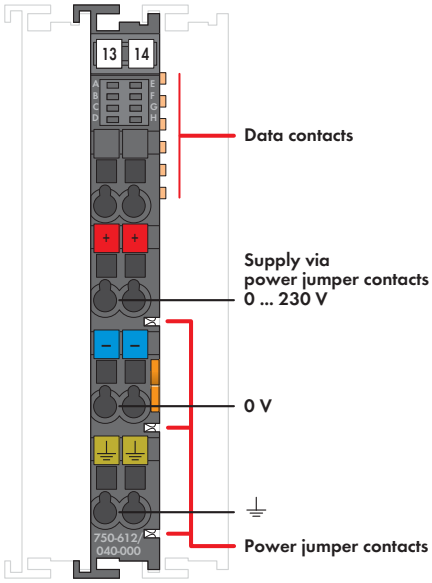

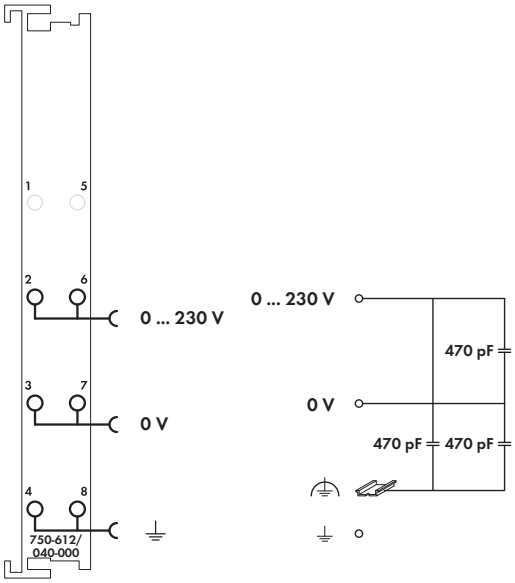

This supply module provides the I/O modules with the corresponding supply potential.
Maximum available supply current to all connected modules is 10 A. When configuring the system, it must be ensured that this total current is not exceeded. Should higher currents be necessary, an intermediate supply module must be added to the assembly.

The module is ideally suited for operation in harsh environmental conditions:
- strongly extended temperature range
- higher dielectric strength and EMC resistance
- higher vibration and shock resistance

Description	Item No.	Pack. Unit
0-230V AC/DC Power Supply /XTR	**750-612/040-000**	1

Accessories		Item No.	Pack. Unit
Miniature WSB Quick marking system			
	plain	**248-501**	5
	with marking	see Section 11	

Approvals

Conformity marking	CE
Korea Certification	
Marine applications	GL
cULus UL 508	
cULus ANSI/ISA 12.12.01	Class I, Div. 2, Grp. ABCD, T4

Technical Data

Wire connection	CAGE CLAMP®
Cross sections	0.25 mm² ... 2.5 mm² / AWG 24 ... 14
Strip lengths	8 ... 9 mm / 0.33 in
Dimensions (mm) W x H x L	12 x 62 x 100
	Height from upper-edge of DIN 35 rail
Weight	51.5 g
Operating temperature	-40 °C ... +70 °C
Storage temperature	-40 °C ... +85 °C
Relative humidity	95 %, short-term condensation acc. to class 3K7 / IEC EN 60721-3-3 (except wind-driven precipitation, water and ice formation)
Operating altitude	without temperature derating: 0 m ... 2000 m; with temperature derating: 2000 m ... 5000 m (0.5 K/100 m); max.: 5000 m

Technical Data

Voltage via power jumper contacts	0 V ... 230 V AC/DC (-20 % ... +25 %)
Current via power jumper contacts (max.)	10 A DC
Rated surge voltage	5.0 kV (EN 60870-2-1 / Class VW3); 6.0 kV (UL 508); 6.0 kV (EN 60664-1 / up to 4,000 m above sea level); 4.0 kV (EN 60664-1 / > 4,000 m up to 5,000 m above sea level)
Overvoltage category	Nominal voltage 230 V: IV (EN 60664-1 / up to 4,000 m above sea level); III (EN 60664-1 / > 4,000 m up to 5,000 m above sea level)
Degree of pollution	2 (EN 60664-1)
Vibration resistance	acc. to IEC 60068-2-6 (acceleration: 5g), EN 60870-2-2, IEC 60721-3-1, -3, EN 61131-2
Shock resistance	acc. to IEC 60068-2-27
EMC immunity of interference	acc. to EN 61000-6-1, -2, EN 61131-2, marine applications, EN 50121-3-2, -4, -5, EN 60255-26, EN 60870-2-1, EN 61850-3, IEC 61000-6-5, IEEE 1613, VDEW: 1994
EMC emission of interference	acc. to EN 61000-6-3, -4, EN 61131-2, EN 60255-26, marine applications, EN 60870-2-1, EN 61850-3, EN 50121-3-2, -4, -5

Internal System Supply Module 24 VDC

for eXTReme environmental conditions

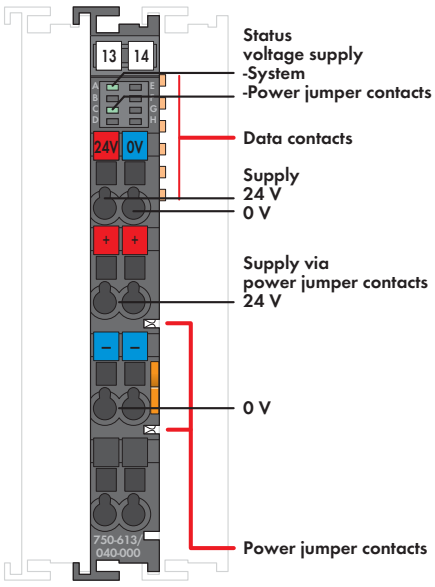

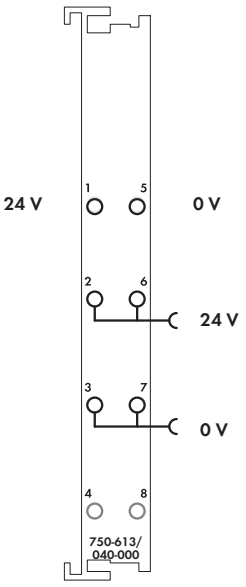

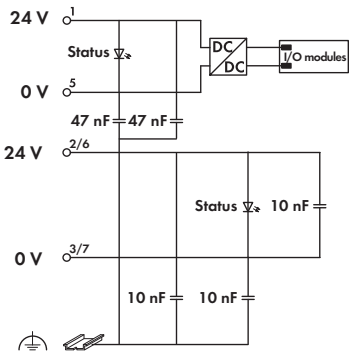

This internal system supply module increases the current supply for the internal system by 2 A.
If the internal current consumption of all modules is higher than 2 A, an additional supply module must be added.
The module also supplies field side power to the adjoining modules via the power jumper contacts.

The module is ideally suited for operation in harsh environmental conditions:
- strongly extended temperature range
- higher dielectric strength and EMC resistance
- higher vibration and shock resistance

Description	Item No.	Pack. Unit
24VDC Bus Power Supply /XTR	**750-613/040-000**	1

Accessories		Item No.	Pack. Unit
Miniature WSB Quick marking system			
	plain	**248-501**	5
	with marking	see Section 11	

Approvals

Conformity marking	CE
Korea Certification	
Marine applications	GL
UL 508	
ANSI/ISA 12.12.01	Class I, Div. 2, Grp. ABCD, T4

Technical Data

Wire connection	CAGE CLAMP®
Cross sections	0.25 mm² ... 2.5 mm² / AWG 24 ... 14
Strip lengths	8 ... 9 mm / 0.33 in
Dimensions (mm) W x H x L	12 x 62 x 100
	Height from upper-edge of DIN 35 rail
Weight	58.5 g
Operating temperature	-40 °C ... +70 °C
Storage temperature	-40 °C ... +85 °C
Relative humidity	95 %, short-term condensation acc. to class 3K7 / IEC EN 60721-3-3 (except wind-driven precipitation, water and ice formation)
Operating altitude	without temperature derating: 0 m ... 2000 m; with temperature derating: 2000 m ... 5000 m (0.5 K/100 m); max.: 5000 m

Technical Data

Power supply	via CAGE CLAMP® connections, 24 VDC
under laboratory conditions +15 °C ... +35 °C	18 V ... 31.2 V (17.4 V ... 31.2 V)[1]
for -40 °C ... +55 °C	18 V ... 28.8 V (17.4 V ... 28.8 V)[1]
for +55 °C ... +70 °C	18 V ... 26.4 V (17.4 V ... 26.4 V)[1]
	[1] including residual ripple of 15 %
Input current max.	500 mA
Efficiency of the power supply (typ.) at	
nominal load (24 V)	90 %
Total current for I/O modules	2000 mA
Voltage via power jumper contacts	24 V DC
Current via power jumper contacts (max.)	10 A
Rated surge voltage	1 kV
Vibration resistance	acc. to IEC 60068-2-6 (acceleration: 5g), EN 60870-2-2, IEC 60721-3-1, -3, EN 61131-2
Shock resistance	acc. to IEC 60068-2-27
EMC immunity of interference	acc. to EN 61000-6-1, -2, EN 61131-2, marine applications, EN 50121-3-2, -4, -5, EN 60255-26, EN 60870-2-1, EN 61850-3, IEC 61000-6-5, IEEE 1613, VDEW: 1994
EMC emission of interference	acc. to EN 61000-6-3, -4, EN 61131-2, EN 60255-26, marine applications, EN 60870-2-1, EN 61850-3, EN 50121-3-2, -4, -5

Field-Side Power Supply Filter

for eXTReme environmental conditions; for field-side power supply

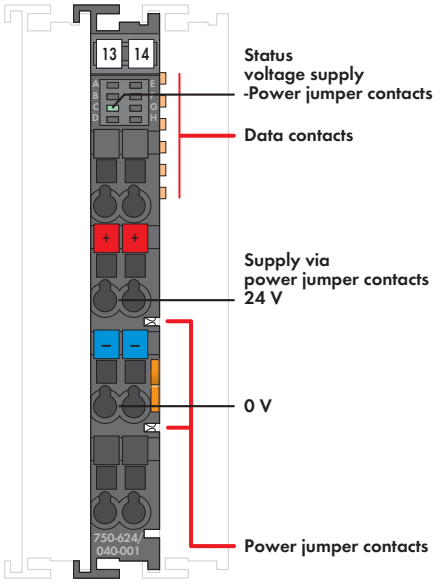

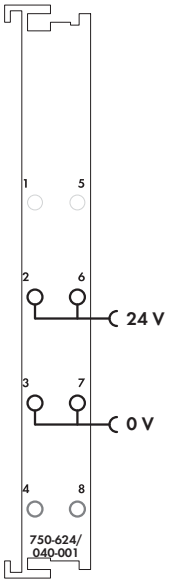

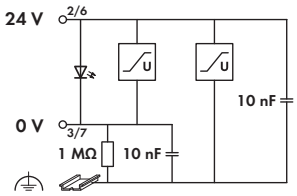

The WAGO-I/O-SYSTEM 750 XTR can also be used in shipbuilding applications and onshore/offshore installations (e.g., platforms, loading facilities). This is possible via certification under the standards of leading agencies such as Germanischer Lloyd and Lloyds Register. Proper system operation is ensured (certified) by using this overvoltage protection module. This also applies to XTR I/O modules used in substations and/or telecontrol systems. The following modules are required for power supply: 750-626/040-000 Power Supply Filter (system and field supply) or 750-624/040-001 Field-Side Power Supply Filter (only field supply). WAGO's 750-624/040-001 Field-Side Power Supply Filter is equipped with surge suppression and can also be used as a power supply module.

The module is ideally suited for operation in harsh environmental conditions:
- strongly extended temperature range
- higher dielectric strength and EMC resistance
- higher vibration and shock resistance

Description	Item No.	Pack. Unit
24VDC Field-Side Power Supply Filter with Overvoltage (Surge) Protection /XTR	**750-624/040-001**	1

Accessories		Item No.	Pack. Unit
Miniature WSB Quick marking system			
	plain	**248-501**	5
	with marking	see Section 11	

Approvals

Conformity marking	CE
Korea Certification	KC
Marine applications	GL
cULus UL 508	
cULus ANSI/ISA 12.12.01	Class I, Div. 2, Grp. ABCD, T4

Technical Data

Wire connection	CAGE CLAMP®
Cross sections	0.25 mm² ... 2.5 mm² / AWG 24 ... 14
Strip lengths	8 ... 9 mm / 0.33 in
Dimensions (mm) W x H x L	12 x 62 x 100
	Height from upper-edge of DIN 35 rail
Weight	51 g
Operating temperature	-40 °C ... +70 °C
Storage temperature	-40 °C ... +85 °C
Relative humidity	95 %, short-term condensation acc. to class 3K7 / IEC EN 60721-3-3 (except wind-driven precipitation, water and ice formation)
Operating altitude	without temperature derating: 0 m ... 2000 m; with temperature derating: 2000 m ... 5000 m (0.5 K/100 m); max.: 5000 m

Technical Data

Power supply	via CAGE CLAMP® connections, 24 VDC
under laboratory conditions +15 °C ... +35 °C	18 V ... 31.2 V (17.4 V ... 31.2 V)[1]
for -40 °C ... +55 °C	18 V ... 28.8 V (17.4 V ... 28.8 V)[1]
for +55 °C ... +70 °C	18 V ... 26.4 V (17.4 V ... 26.4 V)[1]
	[1] including residual ripple of 15 %
Voltage via power jumper contacts	24 V DC
Current via power jumper contacts (max.)	10 A
Rated surge voltage	1 kV
Vibration resistance	acc. to IEC 60068-2-6 (acceleration: 5g), EN 60870-2-2, IEC 60721-3-1, -3, EN 61131-2
Shock resistance	acc. to IEC 60068-2-27
EMC immunity of interference	acc. to EN 61000-6-1, -2, EN 61131-2, marine applications, EN 50121-3-2, -4, -5, EN 60255-26, EN 60870-2-1, EN 61850-3, IEC 61000-6-5, IEEE 1613, VDEW: 1994
EMC emission of interference	acc. to EN 61000-6-3, -4, EN 61131-2, EN 60255-26, marine applications, EN 60870-2-1, EN 61850-3, EN 50121-3-2, -4, -5

Power Supply Filter

for eXTReme environmental conditions; for system and field-side power supply

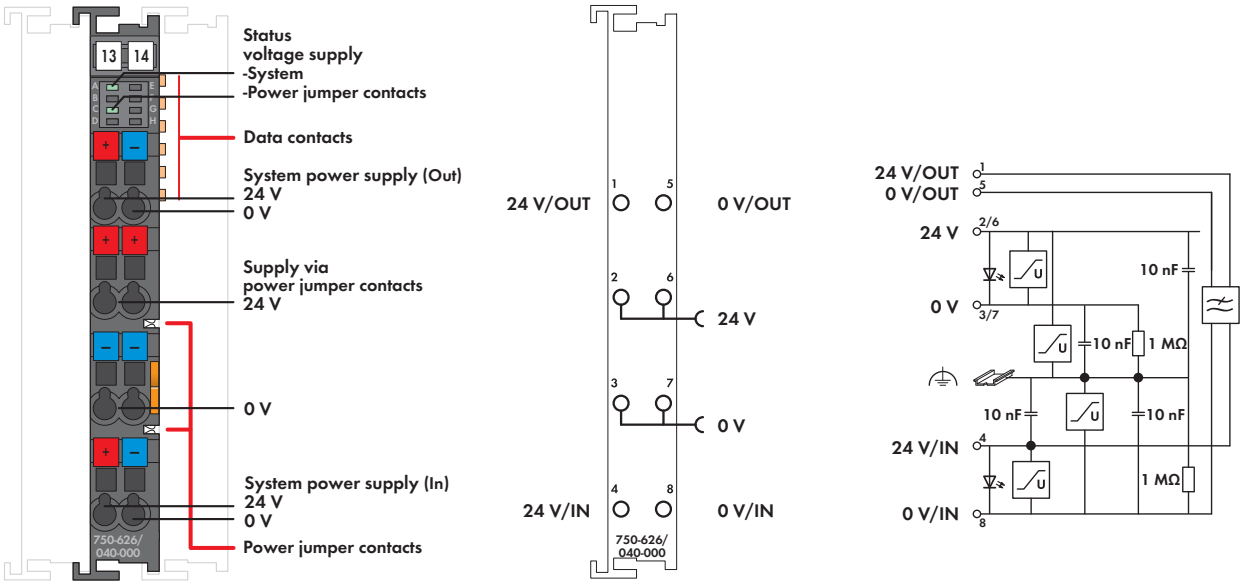

The WAGO-I/O-SYSTEM 750 XTR can also be used in shipbuilding applications and onshore/offshore installations (e.g., platforms, loading facilities). This is possible via certification under the standards of leading agencies such as Germanischer Lloyd and Lloyds Register. Proper system operation is ensured (certified) by using this overvoltage protection module. This also applies to XTR I/O modules used in substations and/or telecontrol systems. The following modules are required for power supply: 750-626/040-000 Power Supply Filter (system and field supply) or 750-624/040-001 Field-Side Power Supply Filter (only field supply). WAGO's 750-626/040-000 Power Supply Filter filters the 24 V system power supply and is equipped with surge suppression. The power supply filter can also be used as a power supply module.

The module is ideally suited for operation in harsh environmental conditions:
- strongly extended temperature range
- higher dielectric strength and EMC resistance
- higher vibration and shock resistance

Description	Item No.	Pack. Unit
24VDC Power Supply Filter with Overvoltage (Surge) Protection /XTR	**750-626/040-000**	1

Accessories		Item No.	Pack. Unit
Miniature WSB Quick marking system			
	plain	**248-501**	5
	with marking	see Section 11	

Approvals

Conformity marking	CE
Korea Certification	KC
Marine applications	GL
UL 508	
ANSI/ISA 12.12.01	Class I, Div. 2, Grp. ABCD, T4

Technical Data

Wire connection	CAGE CLAMP®
Cross sections	0.25 mm² ... 2.5 mm² / AWG 24 ... 14
Strip lengths	8 ... 9 mm / 0.33 in
Dimensions (mm) W x H x L	12 x 62 x 100
	Height from upper-edge of DIN 35 rail
Weight	51 g
Operating temperature	-40 °C ... +70 °C
Storage temperature	-40 °C ... +85 °C
Relative humidity	95 %, short-term condensation acc. to class 3K7 / IEC EN 60721-3-3 (except wind-driven precipitation, water and ice formation)
Operating altitude	without temperature derating: 0 m ... 2000 m; with temperature derating: 2000 m ... 5000 m (0.5 K/100 m); max.: 5000 m

Technical Data

Power supply	via CAGE CLAMP® connections, 24 VDC
under laboratory conditions +15 °C ... +35 °C	18 V ... 31.2 V (17.4 V ... 31.2 V)[1)]
for -40 °C ... +55 °C	18 V ... 28.8 V (17.4 V ... 28.8 V)[1)]
for +55 °C ... +70 °C	18 V ... 26.4 V (17.4 V ... 26.4 V)[1)]
	[1)] including residual ripple of 15 %
Current via system voltage (max.)	1.5 A
Voltage via power jumper contacts	24 V DC
Current via power jumper contacts (max.)	10 A
Rated surge voltage	1 kV
Vibration resistance	acc. to IEC 60068-2-6 (acceleration: 5g), EN 60870-2-2, IEC 60721-3-1, -3, EN 61131-2
Shock resistance	acc. to IEC 60068-2-27
EMC immunity of interference	acc. to EN 61000-6-1, -2, EN 61131-2, marine applications, EN 50121-3-2, -4, -5, EN 60255-26, EN 60870-2-1, EN 61850-3, IEC 61000-6-5, IEEE 1613, VDEW: 1994
EMC emission of interference	acc. to EN 61000-6-3, -4, EN 61131-2, EN 60255-26, marine applications, EN 60870-2-1, EN 61850-3, EN 50121-3-2, -4, -5

Field-Side Connection Module 16+

for eXTReme environmental conditions; 24 VDC

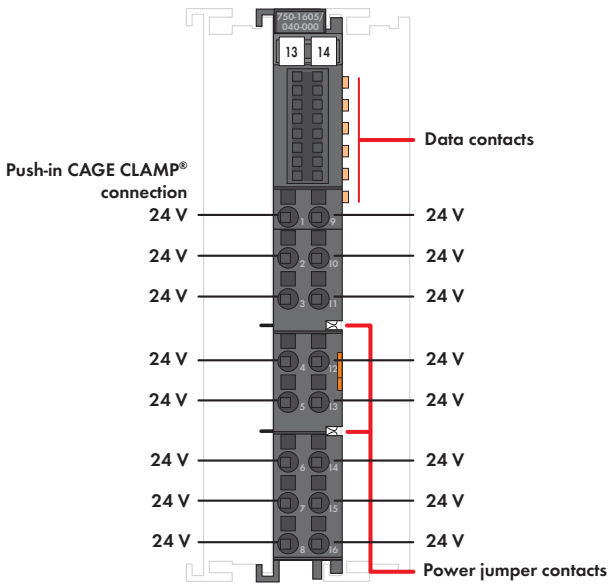

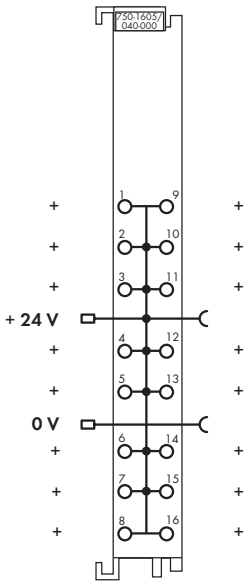

The field side connection module provides 24 V power for the inputs of the 16-channel input module 750-1405/040-000, for example.
This eliminates the need for additional terminal blocks.
The 24 V supply and 0 V potential are derived from the internal power jumper contacts of an adjacent upstream I/O module. A connection of the potentials to the downstream I/O modules is made automatically via the power jumper contacts when snapping the I/O modules together. The 24 V power is provided to all 16 field-side Push-in CAGE CLAMP® connections and the 0 V potential passed through without being used by the module.
An operating tool with a 2.5 mm blade (210-719) is required to open the Push-in CAGE CLAMP® connections.

The module is ideally suited for operation in harsh environmental conditions:
- strongly extended temperature range
- higher dielectric strength and EMC resistance
- higher vibration and shock resistance

Description	Item No.	Pack. Unit
Field-Side Connection Module 16+ /XTR	**750-1605/040-000**	1

Accessories		Item No.	Pack. Unit
Miniature WSB Quick marking system			
	plain	**248-501**	5
	with marking	see Section 11	
Operating tool, with partially insulated shaft, type 1, blade (2.5 x 0.4) mm		**210-719**	50

Approvals	
Conformity marking	CE
Marine applications	GL
cULus UL 508	
cULus ANSI/ISA 12.12.01	Class I, Div. 2, Grp. ABCD, T4

Technical Data	
Wire connection	Push-in CAGE CLAMP®
Cross sections	0.25 mm² ... 1.5 mm² / AWG 24 ... 16
Strip lengths	8 ... 9 mm / 0.33 in
Dimensions (mm) W x H x L	12 x 62 x 100
	Height from upper-edge of DIN 35 rail
Weight	40.2 g
Operating temperature	-40 °C ... +70 °C
Storage temperature	-40 °C ... +85 °C
Relative humidity	95 %, short-term condensation acc. to class 3K7 / IEC EN 60721-3-3 (except wind-driven precipitation, water and ice formation)
Operating altitude	without temperature derating: 0 m ... 2000 m; with temperature derating: 2000 m ... 5000 m (0.5 K/100 m); max.: 5000 m

Technical Data	
Voltage via power jumper contacts	24 VDC
under laboratory conditions +15 °C ... +35 °C	18 V ... 31.2 V (17.4 V ... 31.2 V)[1]
for -40 °C ... +55 °C	18 V ... 28.8 V (17.4 V ... 28.8 V)[1]
for +55 °C ... +70 °C	18 V ... 26.4 V (17.4 V ... 26.4 V)[1]
	[1] including residual ripple of 15 %
Current via power jumper contacts (max.)	10 A
Rated surge voltage	1 kV
Vibration resistance	acc. to IEC 60068-2-6 (acceleration: 5g), EN 60870-2-2, IEC 60721-3-1, -3, EN 61131-2
Shock resistance	acc. to IEC 60068-2-27
EMC immunity of interference	acc. to EN 61000-6-1, -2, EN 61131-2, marine applications, EN 50121-3-2, -4, -5, EN 60255-26, EN 60870-2-1, EN 61850-3, IEC 61000-6-5, IEEE 1613, VDEW: 1994
EMC emission of interference	acc. to EN 61000-6-3, -4, EN 61131-2, EN 60255-26, marine applications, EN 60870-2-1, EN 61850-3, EN 50121-3-2, -4, -5

Field-Side Connection Module 16-

for eXTReme environmental conditions; 0 VDC

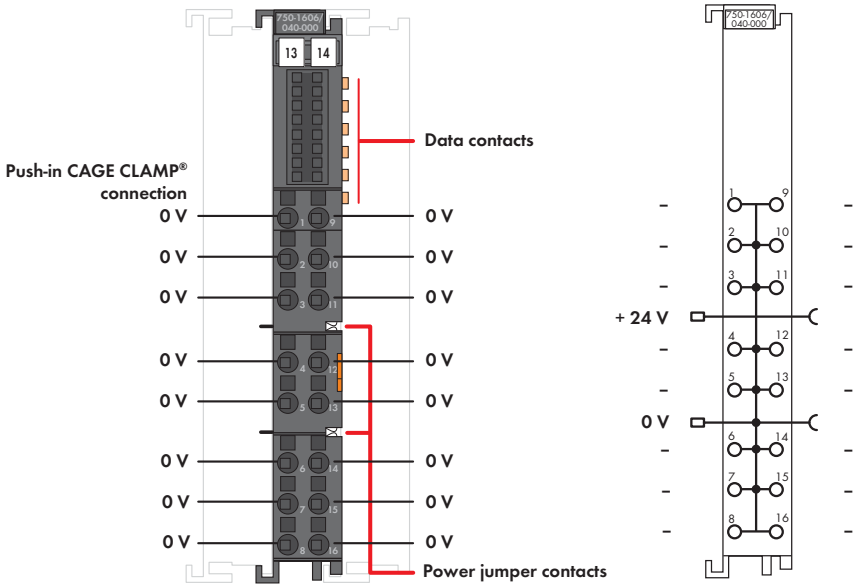

The field side connection module provides 0 V power.
This eliminates the need for additional terminal blocks.
The 24 V supply and 0 V potential are derived from the internal power jumper contacts of an adjacent upstream I/O module. A connection of the potentials to the downstream I/O modules is made automatically via the power jumper contacts when snapping the I/O modules together. The 0 V power is provided to all 16 field-side Push-in CAGE CLAMP® connections and the 24 V potential passed through without being used by the module.
An operating tool with a 2.5 mm blade (210-719) is required to open the Push-in CAGE CLAMP® connections.

The module is ideally suited for operation in harsh environmental conditions:
- strongly extended temperature range
- higher dielectric strength and EMC resistance
- higher vibration and shock resistance

Description	Item No.	Pack. Unit
Field-Side Connection Module 16- /XTR	**750-1606/040-000**	1

Accessories		Item No.	Pack. Unit
Miniature WSB Quick marking system			
	plain	**248-501**	5
	with marking	see Section 11	
Operating tool, with partially insulated shaft, type 1, blade (2.5 x 0.4) mm		**210-719**	50

Approvals

Conformity marking	CE
Marine applications	GL
cULus UL 508	
cULus ANSI/ISA 12.12.01	Class I, Div. 2, Grp. ABCD, T4

Technical Data

Wire connection	Push-in CAGE CLAMP®
Cross sections	0.25 mm² ... 1.5 mm² / AWG 24 ... 16
Strip lengths	8 ... 9 mm / 0.33 in
Dimensions (mm) W x H x L	12 x 62 x 100
	Height from upper-edge of DIN 35 rail
Weight	42.1 g
Operating temperature	-40 °C ... +70 °C
Storage temperature	-40 °C ... +85 °C
Relative humidity	95 %, short-term condensation acc. to class 3K7 / IEC EN 60721-3-3 (except wind-driven precipitation, water and ice formation)
Operating altitude	without temperature derating: 0 m ... 2000 m; with temperature derating: 2000 m ... 5000 m (0.5 K/100 m); max.: 5000 m

Technical Data

Voltage via power jumper contacts	24 VDC
under laboratory conditions +15 °C ... +35 °C	18 V ... 31.2 V (17.4 V ... 31.2 V)[1)]
for -40 °C ... +55 °C	18 V ... 28.8 V (17.4 V ... 28.8 V)[1)]
for +55 °C ... +70 °C	18 V ... 26.4 V (17.4 V ... 26.4 V)[1)]
	[1)] including residual ripple of 15 %
Current via power jumper contacts (max.)	10 A
Rated surge voltage	1 kV
Vibration resistance	acc. to IEC 60068-2-6 (acceleration: 5g), EN 60870-2-2, IEC 60721-3-1, -3, EN 61131-2
Shock resistance	acc. to IEC 60068-2-27
EMC immunity of interference	acc. to EN 61000-6-1, -2, EN 61131-2, marine applications, EN 50121-3-2, -4, -5, EN 60255-26, EN 60870-2-1, EN 61850-3, IEC 61000-6-5, IEEE 1613, VDEW: 1994
EMC emission of interference	acc. to EN 61000-6-3, -4, EN 61131-2, EN 60255-26, marine applications, EN 60870-2-1, EN 61850-3, EN 50121-3-2, -4, -5

End Module

for eXTReme environmental conditions

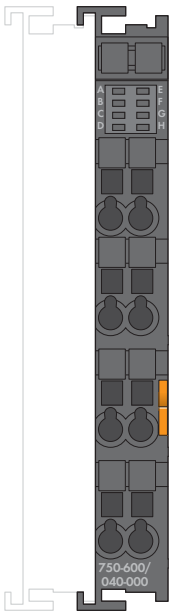

An end module must be snapped onto the assembly at the end of a fieldbus node.

The end module completes the internal data bus, while providing correct data transmission.

The module is ideally suited for operation in harsh environmental conditions:
- strongly extended temperature range
- higher dielectric strength and EMC resistance
- higher vibration and shock resistance

Description	Item No.	Pack. Unit
End Module /XTR	**750-600/040-000**	1

Accessories		Item No.	Pack. Unit
Miniature WSB Quick marking system			
	plain	**248-501**	5
	with marking	see Section 11	

Approvals

Conformity marking	CE
Korea Certification	KC
Marine applications	GL
cULus UL 508	
cULus ANSI/ISA 12.12.01	Class I, Div. 2, Grp. ABCD, T4

Technical Data

Dimensions (mm) W x H x L	12 x 62 x 100
	Height from upper-edge of DIN 35 rail
Weight	32.5 g
Operating temperature	-40 °C ... +70 °C
Storage temperature	-40 °C ... +85 °C
Relative humidity	95 %, short-term condensation acc. to class 3K7 / IEC EN 60721-3-3 (except wind-driven precipitation, water and ice formation)
Operating altitude	without temperature derating: 0 m ... 2000 m; with temperature derating: 2000 m ... 5000 m (0.5 K/100 m); max.: 5000 m
Vibration resistance	acc. to IEC 60068-2-6 (acceleration: 5g), EN 60870-2-2, IEC 60721-3-1, -3, EN 61131-2
Shock resistance	acc. to IEC 60068-2-27
EMC immunity of interference	acc. to EN 61000-6-1, -2, EN 61131-2, marine applications, EN 50121-3-2, -4, -5, EN 60255-26, EN 60870-2-1, EN 61850-3, IEC 61000-6-5, IEEE 1613, VDEW: 1994
EMC emission of interference	acc. to EN 61000-6-3, -4, EN 61131-2, EN 60255-26, marine applications, EN 60870-2-1, EN 61850-3, EN 50121-3-2, -4, -5

I/O-System – *SPEEDWAY*

◄◄ Section 4

I/O-System – 750 and 753 Series

- Highly versatile
- More than 500 modules available
- Functional Safety
- Ex i

◄ Section 5

I/O-System – 750 XTR Series

For demanding applications where the following are critical:

- Extreme temperature stability
- Immunity to interference and dielectric strength
- Vibration and shock resistance

I/O-System – *SPEEDWAY*

- Uncompromising protection, even in the harshest environments outside the control cabinet
- Degree of protection: IP67
- Fully encapsulated

		Page:
General Product Information		430
Item Number Keys		431
Interfaces and Configurations		432
Application and Installation Instructions		434
Standards and Rated Conditions		435

	Description	Item No.	/IF; Interference-free	
Fieldbus Couplers	FC PROFINET IO, 8 DI, 24 VDC	767-1201		436
	FC PROFIBUS DP, 8 DI, 24 VDC	767-1101		438
	FC ETHERNET, 8 DI, 24 VDC	767-1301		440
	FC sercos 8 DI, 24 VDC, HS	767-1311		442
	FC DeviceNet, 8 DI, 24 VDC	767-1401		444
	FC CANopen, 8 DI, 24 VDC	767-1501		446
Digital Input Modules (DI)	8 DI, 24 VDC (8 x M8)	767-3801		448
	8 DI, 24 VDC (4 x M12)	767-3802		450
	8 DI, 24 VDC LS SWITCH (8 x M8)	767-3803		452
	8 DI, 24 VDC LS SWITCH (4 x M12)	767-3804		454
	8 DI, 24 VDC (8 x M12)	767-3805		456
	8 DI, 24 VDC, HS (4 x M12)	767-3806		458
Digital Output Modules (DO)	8 DO, 24 VDC, 0.5 A (8 x M8)	767-4801	767-4801/000-800	460
	8 DO, 24 VDC, 0.5 A (4 x M12)	767-4802	767-4802/000-800	462
	8 DO, 24 VDC, 2.0 A (8 x M8)	767-4803	767-4803/000-800	464
	8 DO, 24 VDC, 2.0 A (4 x M12)	767-4804	767-4804/000-800	466
	8 DO, 24 VDC, 0.5 A LS SWITCH (8 x M8)	767-4805		468
	8 DO, 24 VDC, 0.5 A LS SWITCH (4 x M12)	767-4806		470
	8 DO, 24 VDC, 0.5 A (8 x M12)	767-4807	767-4807/000-800	472
	8 DO, 24 VDC, 0.1 A HS (4 x M12)	767-4808		474
Digital Input/Output Modules (DIO)	8 DIO, 24 VDC, 0.5 A (8 x M8)	767-5801	767-5801/000-800	476
	8 DIO, 24 VDC, 0.5 A (4 x M12)	767-5802	767-5802/000-800	478
	8 DIO, 24 VDC, 0.5 A (8 x M12)	767-5803	767-5803/000-800	480
	4 DIO, 24 VDC, 0.2 A HS (4 x M12)	767-5401		482
Analog Input Modules (AI)	4 AI U/I (4 x M12)	767-6401		484
	4 AI RTD (4 x M12)	767-6402		486
	4 AI TC (4 x M12)	767-6403		488
Analog Output Modules (AO)	4 AO U/I (4 x M12)	767-7401		490
Function and Technology Modules	TTL Incremental Encoder/SSI Encoder (4 x M12)	767-5201		492
	HTL Incremental Encoder/Counter (4 x M12)	767-5202		494
Communication Modules	Serial Interface RS-232, RS-422/-485 (4 x M12)	767-5203		496
	MOVILINK® Interface (RS-232, RS-485) (4 x M12)	767-5204		498
Supply Modules	Power Divider (1 x M23 + 6 x M12)	767-9101		500

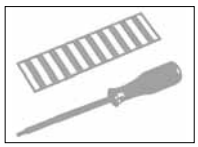

Accessories

S-BUS, Power Supply, PROFIBUS, ETHERNET, sercos, CANopen and DeviceNet Cables 502
Configurable Connectors and General Accessories 514
Marking and Mounting Accessories 520

I/O-System – *SPEEDWAY*
General Product Information

For Cabinet-Free Data Acquisition
Where previously discrete wiring was once required, fieldbuses now provide communication between the control and field levels. Depending on the application, cabinet-free automation systems help minimize costs for planning, start-up and maintenance.

In addition to requiring a high degree of protection, a robust design and standardized connection technology, there is an increasing demand for advanced IP67 features that were once reserved only for IP20 systems, including:

- Real-time capability for isochronous data acquisition/output
- Parameterizable
- Diagnostic capable
- Upgradable

From the cabinet directly to the field level without sacrificing functionality – *SPEEDWAY* for perfectly tailoring machines to meet specific, decentralized needs. Configuration is both easy and flexible, with changes being made safely and quickly (plug & play).

Uncompromising Protection, Even in the Harshest Environments
Every module utilizes IP67-grade protection and robust construction. These fully encapsulated modules safeguard system operation, even when subjected to temperature extremes and prolonged periods of vibration. When combined, these robust design elements ensure long-term electronic circuit protection. Additionally, moisture cannot penetrate the units to cause damage (e.g., hairline cracks).
Electromagnetic shielding consisting of a metallized housing and shield plating guarantees optimal electromagnetic compatibility within the housing. Potential on-machine interferences are directly deflected via the modules' brackets or system's mounting rail. Even in sub-zero temperatures, the WAGO *SPEEDWAY* I/O-System performs reliably.

Modular Design
WAGO *SPEEDWAY 767* is a fieldbus-independent modular IP67 I/O system. It is linked via a fieldbus coupler with a higher-level controller. The fieldbus coupler already has digital inputs. An integrated system bus interface connects to other I/O modules. Fieldbus couplers and I/O modules can be extensively parameterized, allowing direct field-side acquisition and transmission of signals depending on the application needs.

Up to:
- 64 I/O modules per station
- 8 channels per module
- 520 channels per station
- 50 m between two modules
- 500 m total extension per station

Ergonomic Design
Standardized M8, M12 and M23 connections (metal design) ensure easy and safe wiring. The fieldbus, system bus, power supply and sensors/actuators are connected via several coded connectors. This streamlined approach prevents wiring errors.
To accommodate custom marking, the modules have marking strips and a WMB plate. Both the LEDs and marking field are uniquely assigned to the connection.

Flexible Assembly
The modules can be directly mounted on machines. Extensive engineering ensures compliance with standardized specifications from CNOMO guidelines regarding the spacing of assembly drill holes that are often used in passive distributor or sensor/actuator boxes. Adapters for both rails and machine-mount brackets are also available.

Exceptional Degrees of Freedom
Featuring **update capability**, the *SPEEDWAY* I/O-System makes it easy to update fieldbus couplers and I/O module firmware to incorporate new functions.
Integrated **system parameter handling** stores and loads parameter settings and checks that the replacement module is correct when installed.
With **option handling**, variable I/O station configurations, which can occur when tools are changed in a machining center, can be implemented without engineering via PROFIBUS.

- Fully encapsulated for harsh environmental conditions
- Fieldbus-independent – compatible with all standard fieldbus protocols & ETHERNET standards
- Real-time capability up to isochronous mode for selected ETHERNET-based fieldbuses
- Exclusive use of standard pluggable connectors
- Flexible mounting options

Explanation of the components for the item number key

Series

Item No. : 767-yyxx

1yxx: Fieldbus Coupler (FC)
- 1xx: PROFIBUS
- 2xx: PROFINET
- 3xx: ETHERNET, sercos
- 4xx: DeviceNet
- 5xx: CANopen
  - xx: Consec. number

3yxx: Digital Input Modules (DI)
- 8xx: 8 channels
  - 01: Connector 8 x M8, high-side switching
  - 02: Connector 4 x M12, high-side switching
  - 03: Connector 8 x M8, low-side switching
  - 04: Connector 4 x M12, low-side switching
  - 05: Connector 8 x M12, high-side switching
  - 06: Connector 4 x M12, high speed

4yxx: Digital Output Modules (DO)
- 8xx: 8 channels
  - 01: Connector 8 x M8, 0.5 A, high-side switching
  - 02: Connector 4 x M12, 0.5 A, high-side switching
  - 03: Connector 8 x M8, 2 A, high-side switching
  - 04: Connector 4 x M12, 2 A, high-side switching
  - 05: Connector 8 x M8, 0.5 A, low-side switching
  - 06: Connector 4 x M12, 0.5 A, low-side switching
  - 07: Connector 8 x M12, 0.5 A, low-side switching
  - 08: Connector 4 x M12, 0.1 A, high speed

5yxx: Digital Input/Output Modules (DIO) DI/DO
- 4xx: 4 channels
  - 01: Connector 4xM12, 0.2 A, high speed
- 8xx: 8 channels
  - 01: Connector 8 x M8, 0.5 A, high-side switching
  - 02: Connector 4 x M12, 0.5 A, high-side switching
  - 03: Connector 8 x M12, 0.5 A, low-side switching

5yxx: Function and Technology Modules
- 2xx: 2 channels + 4 DIO
  - 01: TTL Incremental Encoder/SSI Encoder
  - 02: HTL Incremental Encoder/Counter

5yxx: Communication Modules
- 2xx: 2 channels + 4 DIO
  - 03: Serial Interface RS-232, RS-422/-485
  - 04: MOVILINK® Interface RS-232, RS-485

6yxx: Analog Input Modules (AI)
- 4xx: 4 channels
  - 01: Voltage/Current (U/I)
  - 02: Resistance Measurement (RTD)
  - 03: Thermocouple (TC)

7yxx: Analog Output Modules (AO)
- 4xx: 4 channels
  - 01: Voltage/Current (U/I)

9yxx: Supply Module
- 1xx: M23 Connector
  - 01: Power Divider

.../0000-0800: Modules with interference-free outputs

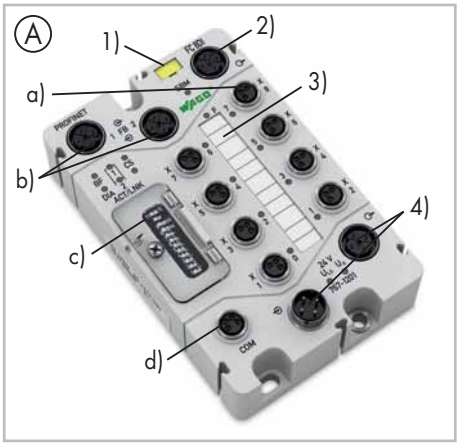

(1) Module marking WMB
(2) System bus connection M12
(3) Sensor/actuator marking
(4) Supply connections M12

Housing design fieldbus coupler (A)
- Sensor/actuator connections M8 (a)
- Fieldbus connections M12 (b)
- Control panel (c)
- Service connection M8 (d)
- W x H x L (mm) 75 x 35.7 x 117

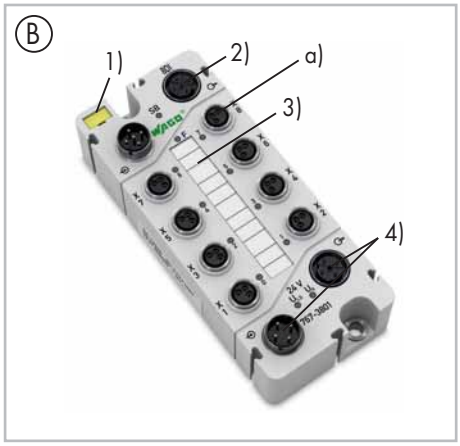

Housing design I/O module 8 x M8 (B)
- Sensor/actuator connections M8 (a)
- W x H x L (mm) 50 x 35.7 x 117

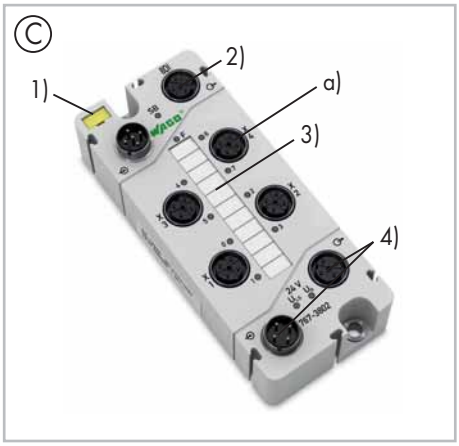

Housing design I/O module 4 x M12 (C)
- Sensor/actuator connections M12 (a)
- W x H x L (mm) 50 x 35.7 x 117

Housing design I/O module 8 x M12 (D)
- Sensor/actuator connections M12 (a)
- W x H x L (mm) 50 x 35.7 x 170

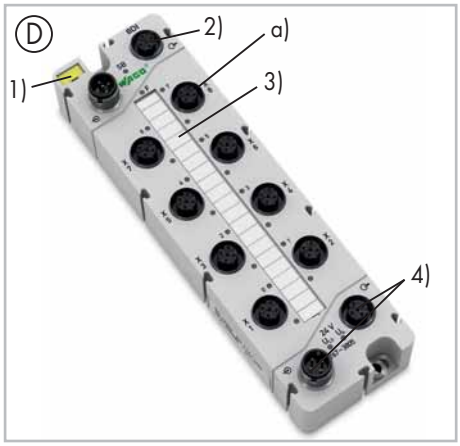

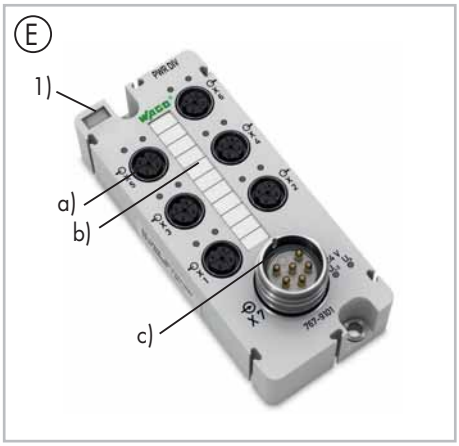

Power divider housing design (E)
- Supply outputs M12 (a)
- Supply output marking (b)
- Supply input M23 (c)

W x H x L (mm) 50 x 35.7 x 117

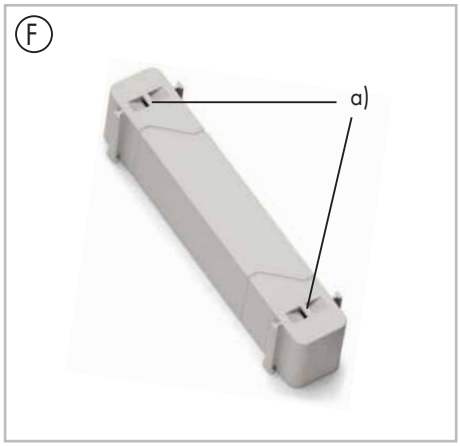

Spacer module (F)
- Cable tie mounts (a)
- W x H x L (mm) 20 x 25 x 117

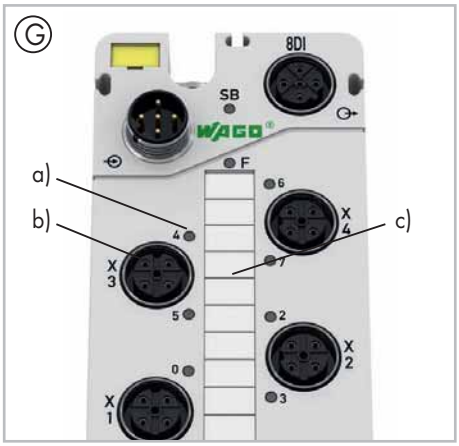

Signaling (G)
- Per channel 1–2 LEDs (a)
- Unique assignment to the connector (b)
- Unique assignment to the marking (c)

Degree of protection (H)
- All modules are fully encapsulated
- Degree of protection: IP67
- Printing on back of unit details pin assignment

Fieldbus coupler

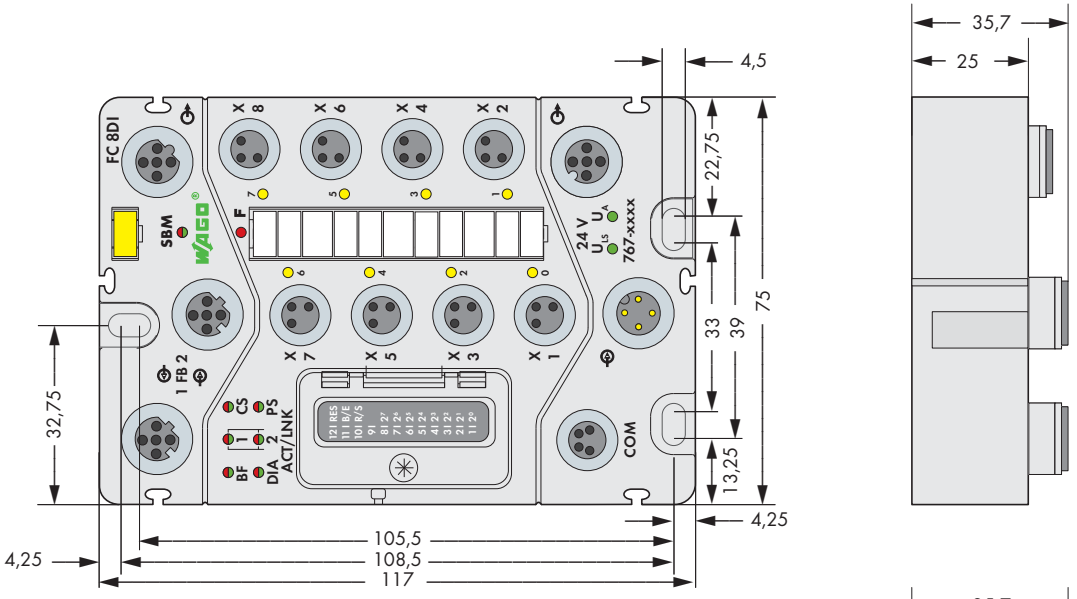

I/O module

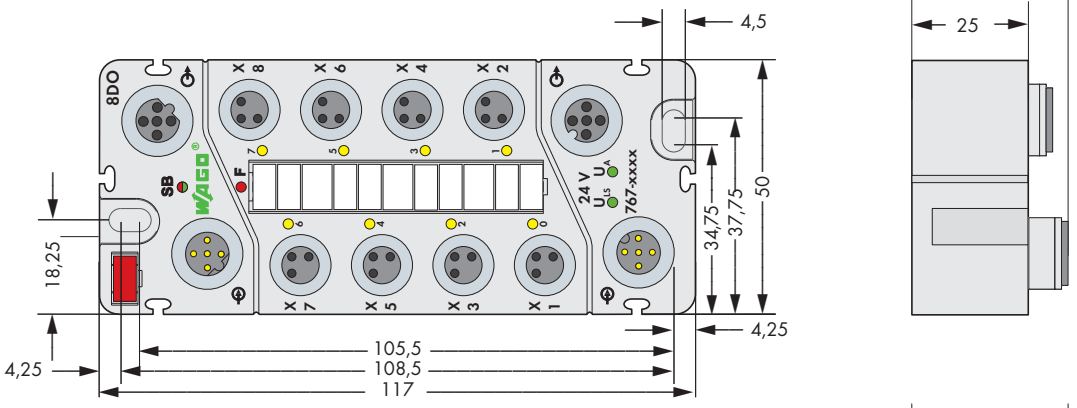

I/O module

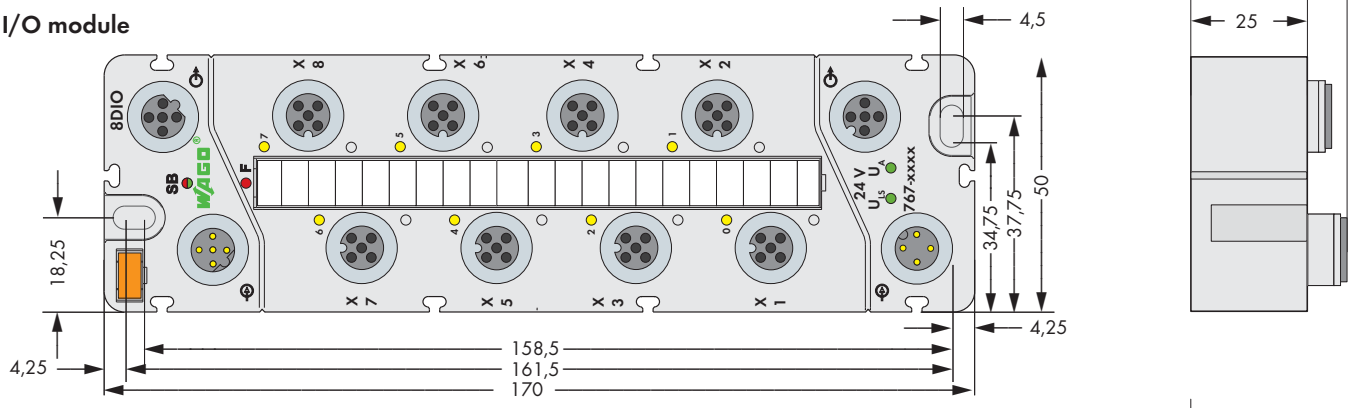

Power divider

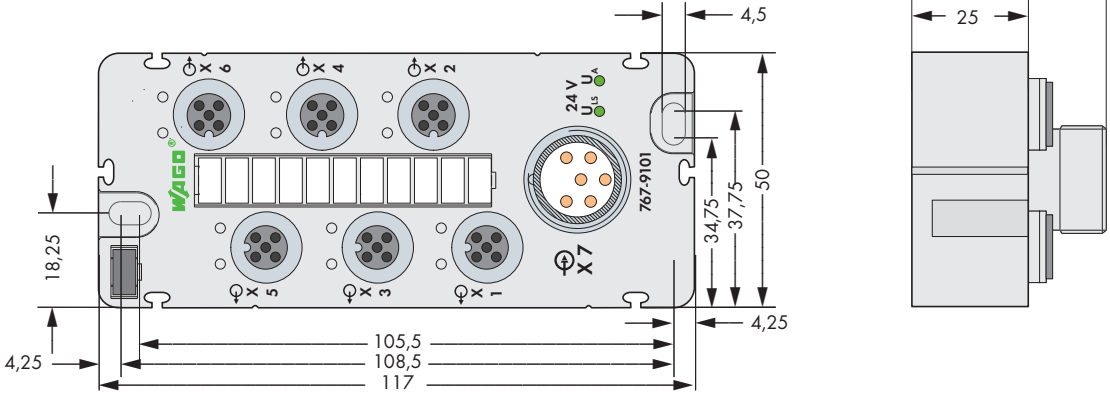

Power supply

The modular structure permits both individual supply of I/O modules and aggregation to supply groups (e.g., for implementing emergency stop groups). Thus, each supply group and each individual supply can be operated using different power supplies at the same potential. Two supply lines are routed within the supply lines (gray). U_{LS} for logic and sensor supply is always electrically isolated from U_A for the actuator supply.

You can connect additional I/O modules until the highest permissible current load of 4 A for one supply line (U_{LS} and/or U_A) is reached. To connect other *SPEEDWAY* modules, you have to reconnect the power supply. An exception are the 2 A output modules which cannot route the power supply due to an increased power demand.

By using a power divider, it is possible to distribute the U_{LS} and U_A power supplies over six M12 connectors. The combination of point-to-point power distribution and linear power distribution/routing offers the greatest flexibility to optimize the supply lines for the respective application and to supply power over large distances.

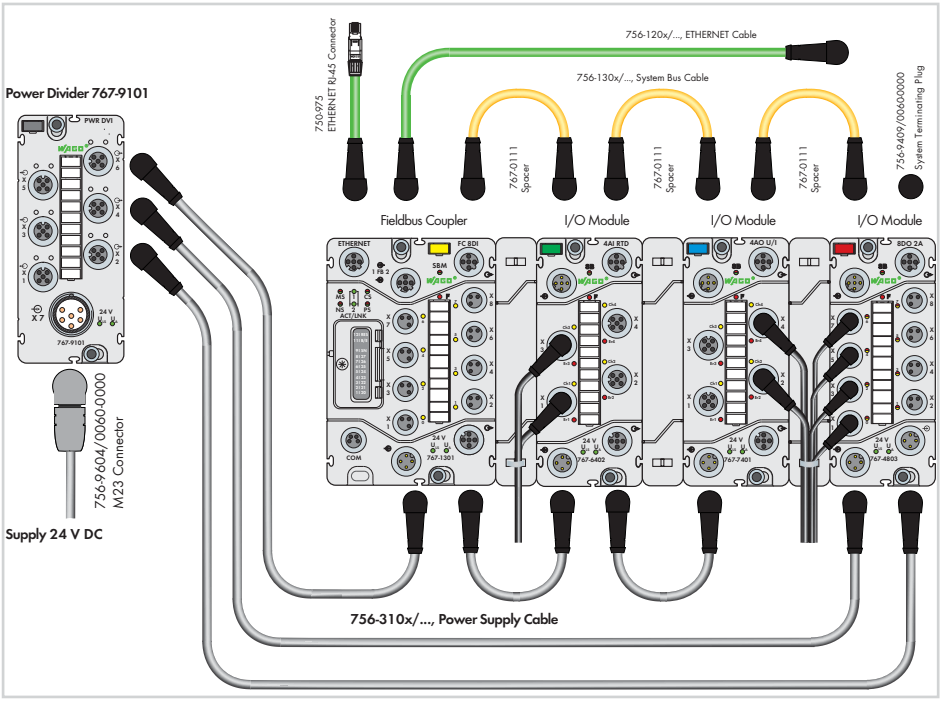

Interference-free in safety-related applications

To safely and easily perform cost-effective, centralized deactivation of complete actuator groups, the actuator's power supply can be switched off using a safety switching device. This can either be performed for each individual actuator or by turning off the power supply to a group of control outputs.
In the event of failure, ensure that no interference from other current or power circuits occurs – even when the control voltage is switched off – so the defined safety function properties (logic and time response) remain unchanged.

Some modules are designed to provide interference-free safety functionality. These modules comply with safety requirements up to Category 4 of DIN EN ISO 13849-1:2007. Safety category and performance level depend solely on the safety components and their wiring.

Attention!
Interference-free WAGO I/O modules have no active influence on the safety function, they are not an active part of the safety application and are not a substitute for the safety switching device! When using the components in safety functions, the corresponding notes must be observed in the corresponding manual.

Attention!
For interference-free operation, it is necessary to lay the power cables separately or to use shielded supplied lines. Please observe the notes in the manual!

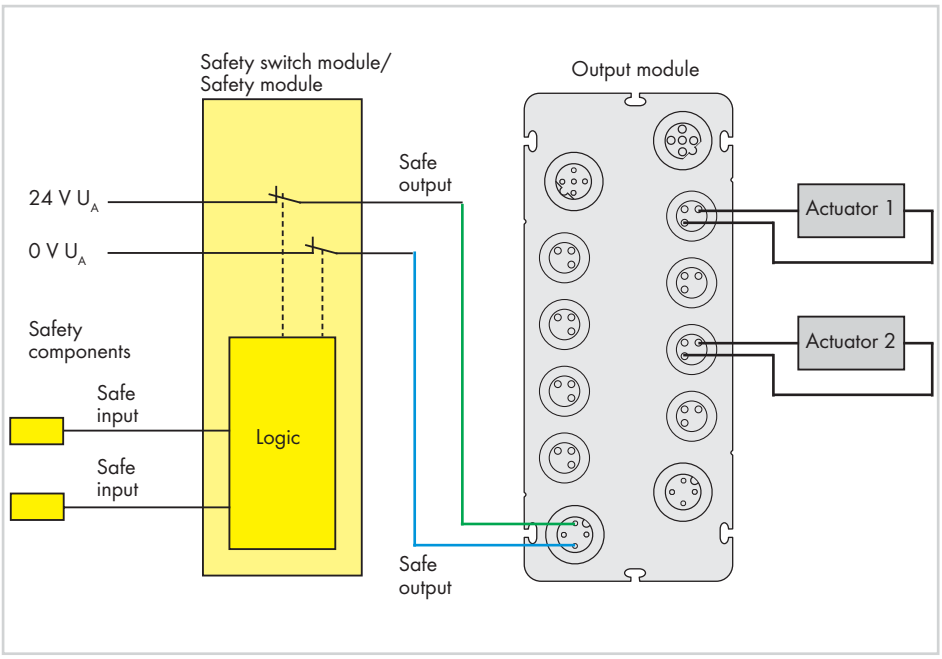

Example: Two-pin shutdown of the power supply of all digital outputs

(A) Carrier rail adapter

(B) Profile rail adapter

Available for fieldbus couplers and I/O modules as accessories

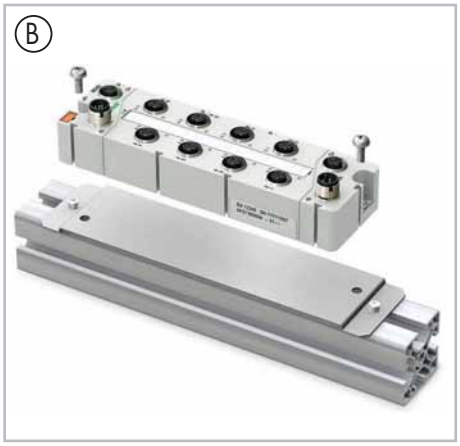

(C) Various versions of drag chain compatible, pre-assembled cables for power supply, system bus, fieldbus and separate pluggable connectors available as accessories

(D) Cable marking via marker sleeves in different lengths for various core diameters (211 Series)

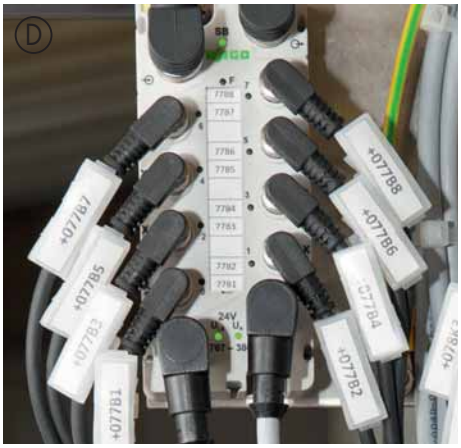

Standards and Rated Conditions

General Specifications	
Operating voltage	24 VDC (-25 % ... +30 %)
Operating temperature	-25 °C ... +60 °C; temperature change 3 K/s
Storage temperature	-40 °C ... +85 °C
Relative humidity (without condensation)	5 % ...95 %
Operating altitude	-1000 m ... 2000 m; air pressure 1080 ... 795 hPa
Altitude at storage/transport	-1000 m ... 3500 m; air pressure 1080 ... 660 hPa
Free fall	≤ 1 m acc. to EN 61131-2
Degree of contamination	3 acc. to IEC 60664 (IEC 61131)
Protection class	III acc. to IEC 60536 (VDE 0106, Part 1)
Vibration resistance	5g acc. to IEC 60068-2-6
Shock resistance	short-term: 50g/11 ms/half-sine acc. IEC 60068-2-27 long-term: 30g/6 ms/half-sine acc. IEC 60068-2-29
EMC immunity to interference	EN 61000-6-2
EMC emission of interference	EN 61000-6-4
Protection type	IP67 (NEMA 6&6P) acc. to DIN 40050 (EN 60529)
Mounting position	any
Housing material	Polyamide (PA), light gray (RAL7035); Makrolon (address switch cover), transparent; Flammability acc. to UL94-V0; halogen, silicon-free Potting: Polyurethane (PUR), halogen/silicon-free
UV resistance	1000 h UV continuous light acc. to DIN EN ISO 4892-2B
Maximum contaminant concentration	SO2 < 0.5 ppm; H2S < 0.1 ppm
Current carrying capacity of supply connections	max. 8 A (U_S: 4 A; U_A: 4 A)

PROFINET IO Fieldbus Coupler

incl. 8 digital inputs (8 x M8)

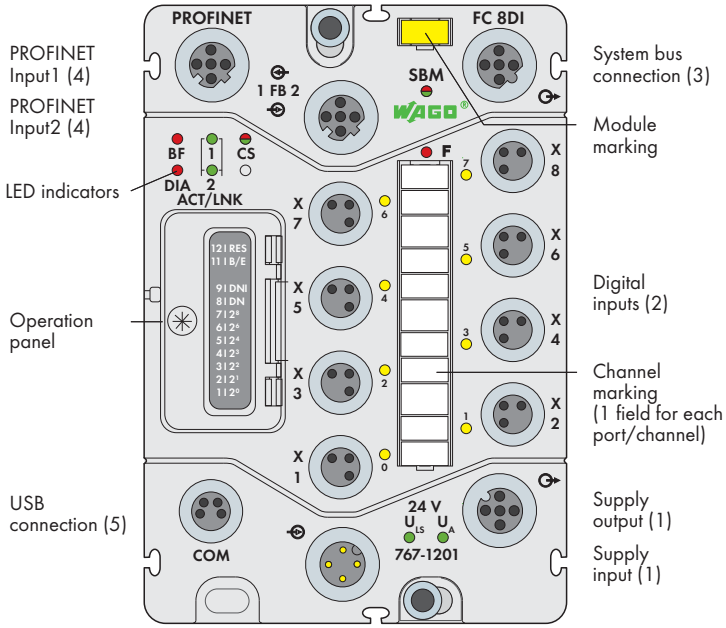

Short description:
PROFINET IO is the ETHERNET-based, manufacturer-independent and open fieldbus standard from PROFIBUS & PROFINET International (PI). This standard offers solutions for manufacturing/process automation and safety applications in addition to covering an entire range of needs from drive technology to synchronous motion control applications.
The fieldbus coupler links the WAGO SPEEDWAY 767 I/O modules to PROFINET IO. The fieldbus coupler creates a process image of all inputs and outputs depending on the station's module structure and the configuration data transmitted by the IO controller. In addition, the coupler provides the connected I/O modules with the parametrization data provided by the device description (GSDML file) and transferred by the IO controller. The device signals existing module and channel errors as diagnostic alarms.

Characteristics:
- Integrated switch
- 8 digital 24VDC inputs included
- Modular and extendable up to 64 I/O modules (via system bus connection)
- USB interface for servicing purposes
- Parametrization via GSDML or FDT/ DTM (incl. diagnostics and simulation)
- Enclosed operation panel (operating mode and address switch)

Included:
- Module WMB marker card, yellow (1 pcs)
- Channel marker strips (1 pcs)
- M8 protective caps (2 pcs)

Description	Item No.	Pack. Unit
FC PROFINET IO 8DI 24V DC	**767-1201**	1

Accessories	Item No.
PROFINET cable + accessories	see pages 510 + 517
System bus/power supply cable + accessories	see pages 502 ... 507 + 516
General accessories	see pages 520 ... 521
GSDML file	Download: www.wago.com
DTM (Device Type Manager)	Download: www.wago.com

Technical Data	
Fieldbus:	
Device type	PROFINET IO device
Connection type (4)	M12 connectors, D coded, 5 poles
Baud rate	100 Mbit/s, full duplex
Transmission medium	100Base-TX, twisted pair copper cables
Station name	Adjustable via operation panel or DCP
Protocols	PROFINET IO, DCP, LLDP, SNMP
Additional data	see PROFINET specification
Module supply:	
Connection type (1)	M12 connectors, A coded, 4 poles;
	Derating must be observed
Current carrying capacity of supply	
connections	Max. 8 A (U_{LS}: 4 A, U_A: 4 A)
Supply voltage	
Logic and sensor voltage U_{LS}	24 V DC (-25 % ... +30 %)
Actuator voltage U_A	24 V DC (-25 % ... +30 %);
	Also required for power supply transmission
Supply current	
Logic and sensor current I_{LS}	typ. 125 mA + sensors (max. 400 mA)
Actuator current I_A	5mA
Protection	Reverse voltage protection for U_{LS} + U_A;
	short circuit protection for sensor supply

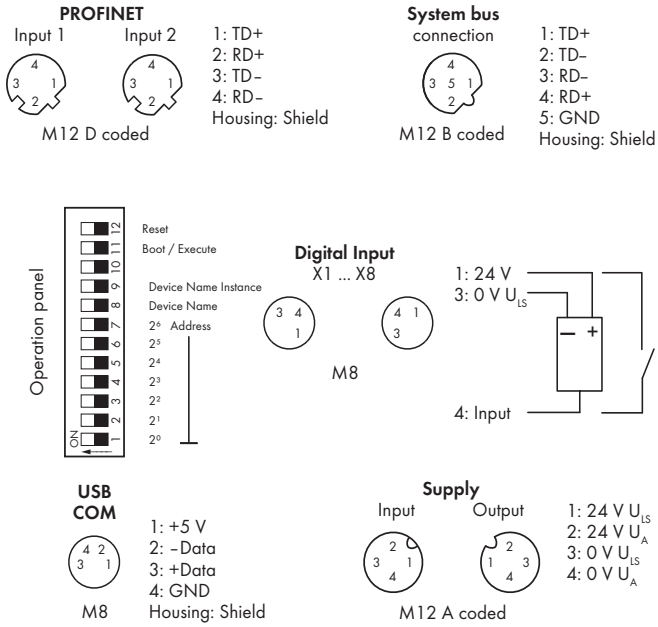

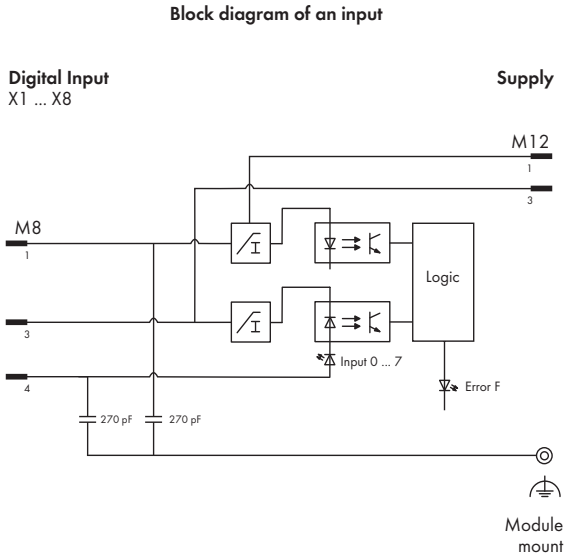

Technical Data

Digital inputs:	
Number of inputs	8
Connection type (2)	M8 connectors, 3 poles
Wire connection	2- or 3-wire
Input filter	parametrizable
Input characteristic	Type 1, acc. to IEC 61131-2
Signal voltage (0)	-3 V ... +5 V DC
Signal voltage (1)	+15 V ... +30 V DC
Input wiring	high-side switching
Input voltage	24 V DC (-30 V DC < U_{IN} < +30 V DC)
Input current (typ.)	2.8 mA
Cable length, unshielded	≤ 30 m
Wrong connection of inputs	No effect
System bus:	
Number of expendable modules	64
Connection type (3)	M12 connectors, B coded, 5 poles, shielded
Isolation:	
Channel – Channel	No
U_{LS}, U_A, system bus, fieldbus	500 V DC each
Service:	
Type	USB standard 1.1
Connection type (5)	M8 connectors, 4 poles
Standards and approvals:	
PROFINET	IEC 61158
Conformity marking	CE
Korea Certification	
UL 508	
BVS 15 ATEX E 098 X	II 3G Ex nA IIC T5 Gc, II 3D Ex tc IIIB T90°C Dc
IECEx BVS 15.0083X	Ex nA IIC T5 Gc, Ex tc IIIB T90°C Dc
Configurable functions:	
Fieldbus coupler	see manual
Digital Inputs	
Input filter (per channel)	0.1/ 0.5/ 3 /15 /20 ms/ filter off
Inversion (per channel)	On/off
Online simulation (per channel)	Lock/unlock, simulation value: 0/1
Online simulation (per module)	Diagnostics
I/O diagnostics:	
I/O diagnostics (per module)	Short circuit/overload of sensor supply Undervoltage (U_{LS} + U_A)

Technical Data

Process image:	
Input process image	1024 bytes
Output process image	1024 bytes
LED indicators:	
BF : PROFINET IO bus error	LED (red)
DIA : PROFINET IO diagnostics	LED (red)
ACT/LNK 1 : Network connection, fieldbus 1	LED (green)
ACT/LNK 2 : Network connection, fieldbus 2	LED (green)
CS : Fieldbus coupler status	LED (green/red)
SBM : System bus master status	LED (green/red)
F: Error status	LED (red)
0 ... 7: Input signal status	LED (yellow)
U_{LS} + U_A: Supply status	LED (green)
Indicators	Non-latching

General Specifications

Dimensions (mm) W x H x L	75 x 35.7 x 117
Weight	377.1 g

PROFIBUS DP-V1 Fieldbus Coupler

incl. 8 digital inputs (8 x M8)

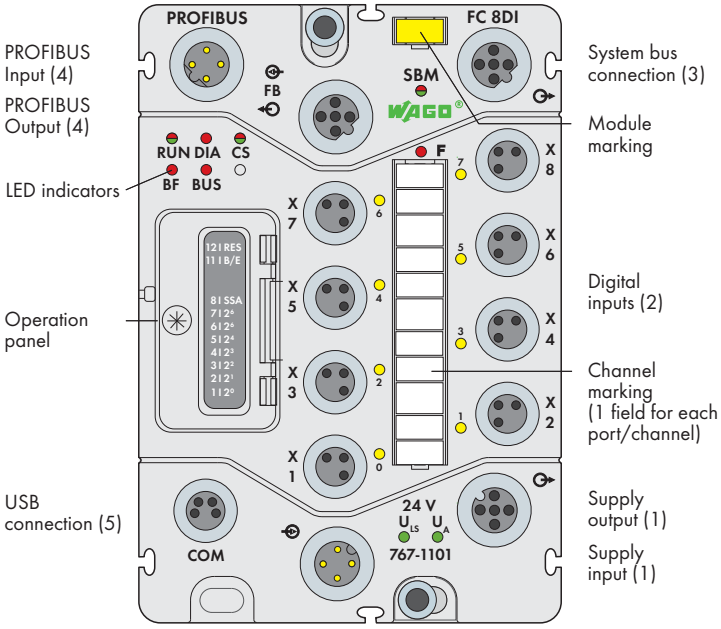

Short description:
PROFIBUS DP is the manufacturer-independent and open fieldbus standard from PROFIBUS & PROFINET International (PI). This standard offers solutions for manufacturing/process automation and safety applications in addition to covering an entire range of needs from drive technology to synchronous motion control applications.
The fieldbus coupler links the WAGO SPEEDWAY 767 I/O modules to PROFIBUS DP. The coupler creates a process image of all inputs and outputs depending on the station's module structure and the configuration data transmitted by the DP master. In addition, the coupler provides the connected I/O modules with the parametrization data provided by the device description (GSD file) and transferred by the DP master, if required. In DP-V0 operation mode, the device provides device, identification and channel related diagnostics as well as module status. In DP-V1 operation mode, status messages and optional diagnostic alarms are provided instead of identification and channel based diagnostics.

Characteristics:
- 8 digital 24VDC inputs included
- Modular and extendable up to 63 I/O modules (via system bus connection)
- USB Interface for servicing purposes
- Parametrization via GSD or FDT/ DTM (incl. diagnostics and simulation)
- Enclosed operation panel (operating mode and address switch)

Included:
- Module WMB marker card, yellow (1 pcs)
- Channel marker strips (1 pcs)
- M8 protective caps (2 pcs)

Description	Item No.	Pack. Unit
FC PROFIBUS DP 8DI 24V DC	**767-1101**	1

Accessories	Item No.
PROFIBUS cable + accessories	see pages 508 ... 509
System bus/power supply cable + accessories	see pages 502 ... 507 + 516
General accessories	see pages 520 ... 521
GSD files	Download: www.wago.com
DTM (Device Type Manager)	Download: www.wago.com

Technical Data	
Fieldbus:	
Device type	PROFIBUS DP-V1 slave
Connection type (4)	M12 connectors, B coded, 4 poles
Baud rate	9.6 kBd ... 12 MBd (automatic recognition)
Transmission medium	RS-485 / 2-core copper cable acc. to IEC 61158 and EN50170
Station address	0 - 125 (adjustable via operation panel or PROFIBUS)
Protocols	PROFIBUS DP
Module supply:	
Connection type (1)	M12 connectors, A coded, 4 poles; Derating must be observed
Current carrying capacity of supply connections	Max. 8 A (U_{LS}: 4 A, U_A: 4 A)
Supply voltage	
Logic and sensor voltage U_{LS}	24 V DC (-25 % ... +30 %)
Actuator voltage U_A	24 V DC (-25 % ... +30 %); Also required for power supply transmission
Supply current	
Logic and sensor current I_{LS}	typ. 110 mA + sensors (max. 400 mA)
Actuator current I_A	5mA
Protection	Reverse voltage protection for U_{LS} + U_A; short circuit protection for sensor supply

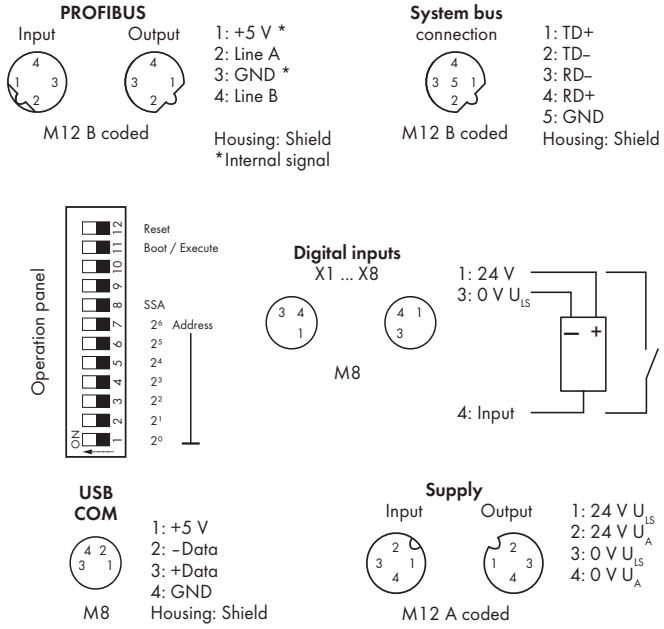

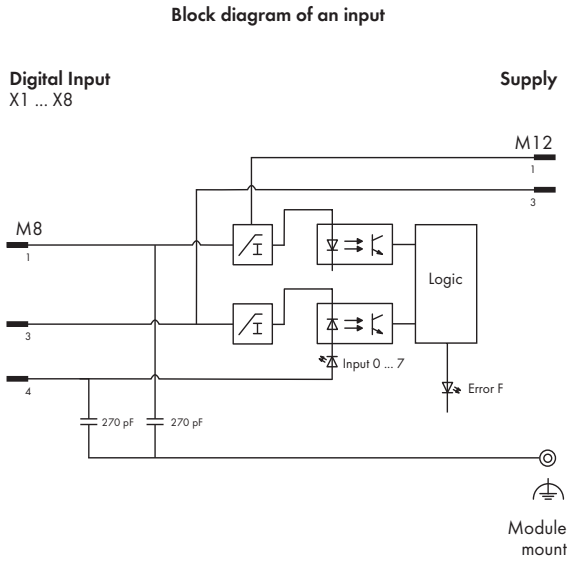

Technical Data

Digital inputs:	
Number of inputs	8
Connection type (2)	M8 connectors, 3 poles
Wire connection	2- or 3-wire
Input filter	parametrizable
Input characteristic	Type 1, acc. to IEC 61131-2
Signal voltage (0)	-3 V ... +5 V DC
Signal voltage (1)	+15 V ... +30 V DC
Input wiring	high-side switching
Input voltage	24 V DC (-30 V DC < U_{IN} < +30 V DC)
Input current (typ.)	2.8 mA
Cable length, unshielded	≤ 30 m
Wrong connection of inputs	No effect
System bus:	
Number of expendable modules	63
Connection type (3)	M12 connectors, B coded, 5 poles, shielded
Isolation:	
Channel – Channel	No
U_{LS}, U_A, system bus, fieldbus	500 V DC each
Service:	
Type	USB standard 1.1
Connection type (5)	M8 connectors, 4 poles
Standards and approvals:	
PROFIBUS	IEC 61158
Conformity marking	CE
Korea Certification	
UL 508	
BVS 15 ATEX E 098 X	II 3G Ex nA IIC T5 Gc, II 3D Ex tc IIIB T90°C Dc
IECEx BVS 15.0083X	Ex nA IIC T5 Gc, Ex tc IIIB T90°C Dc
Configurable functions:	
Fieldbus coupler	see manual
Digital Inputs	
Input filter (per channel)	0.1/ 0.5/ 3 /15 /20 ms/ filter off
Inversion (per channel)	On/off
Online simulation (per channel)	Lock/unlock, simulation value: 0/1
Online simulation (per module)	Diagnostics
I/O diagnostics:	
I/O diagnostics (per module)	Short circuit/overload of sensor supply Undervoltage (U_{LS} + U_A)

Technical Data

Process image:	
Input process image	244 bytes
Output process image	244 bytes
LED indicators:	
RUN : Fieldbus coupler initialization	LED (green/red)
BF : PROFIBUS DP bus error	LED (red)
DIA : PROFIBUS DP diagnostics	LED (red)
BUS : PROFIBUS DP projecting error	LED (red)
CS : Fieldbus coupler status	LED (green/red)
SBM : System bus master status	LED (green/red)
F: Error status	LED (red)
0 ... 7: Input signal status	LED (yellow)
U_{LS} + U_A: Supply status	LED (green)
Indicators	Non-latching

General Specifications

Dimensions (mm) W x H x L	75 x 35.7 x 117
Weight	405 g

ETHERNET Fieldbus Coupler

incl. 8 digital inputs (8 x M8)

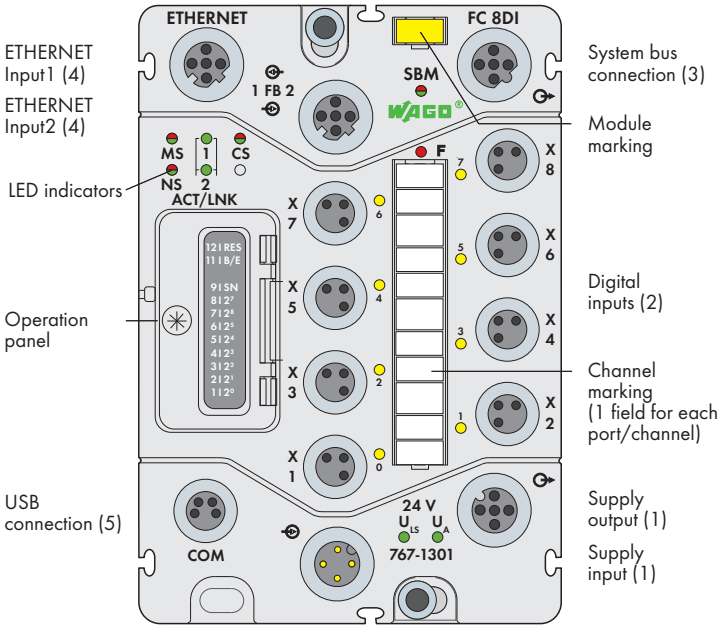

Short description:
In addition to MODBUS/TCP, the ETHERNET/IP protocol has proven itself as an industrial communication standard over ETHERNET.
The fieldbus coupler links the WAGO SPEEDWAY 767 system to ETHERNET. When initializing, the buscoupler determines the station's module structure and creates a process image of all inputs and outputs. The application protocols MODBUS/TCP and ETHERNET/IP are available for process data and the protocol services Http, BootP, DHCP, DNS, SNTP, FTP and SNMP (on request) for the system administration and diagnostics.

Characteristics:
- Integrated switch
- 8 digital 24VDC inputs included
- Modular and extendable up to 64 I/O modules (via system bus connection)
- USB interface for servicing purposes
- Parametrization via FDT/DTM (incl. diagnostics and simulation)
- Enclosed operation panel (operating mode and address switch)

Included:
- Module WMB marker card, yellow (1 pcs)
- Channel marker strips (1 pcs)
- M8 protective caps (2 pcs)

Description	Item No.	Pack. Unit
FC ETHERNET 8DI 24V DC	**767-1301**	1

Accessories	Item No.
ETHERNET cable + accessories	see pages 510 + 517
System bus/power supply cable + accessories	see pages 502 ... 507 + 516
General accessories	see pages 520 ... 521
DTM (Device Type Manager)	Download: www.wago.com

Technical Data	
Fieldbus:	
Device type	ETHERNET device
Connection type (4)	M12 connectors, D coded, 4 poles
Baud rate	10/100 Mbit/s
Transmission medium	Copper cable
Station address	1-255 (last byte of IP address adjustable via operation panel)
Protocols	MODBUS/TCP (UDP), EtherNet/IP
Additional data	see manual
Module supply:	
Connection type (1)	M12 connectors, A coded, 4 poles; Derating must be observed
Current carrying capacity of supply connections	Max. 8 A (U_{LS}: 4 A, U_A: 4 A)
Supply voltage	
Logic and sensor voltage U_{LS}	24 V DC (-25 % ... +30 %)
Actuator voltage U_A	24 V DC (-25 % ... +30 %); Also required for power supply transmission
Supply current	
Logic and sensor current I_{LS}	typ. 125 mA + sensors (max. 400 mA)
Actuator current I_A	5mA
Protection	Reverse voltage protection for U_{LS} + U_A; short circuit protection for sensor supply

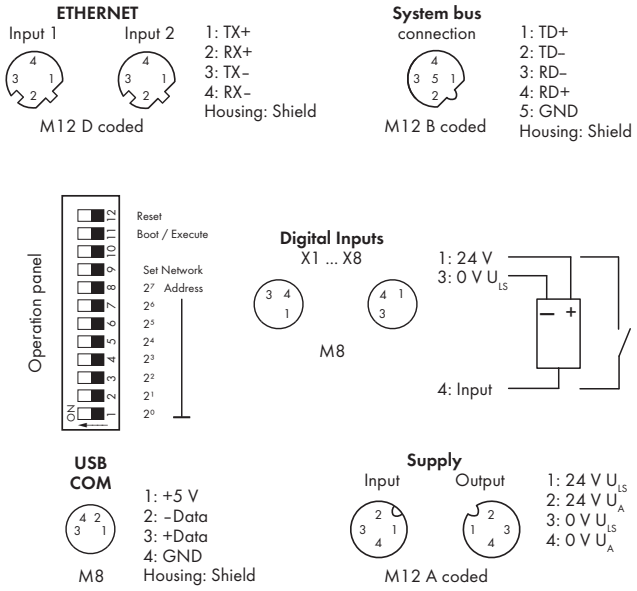

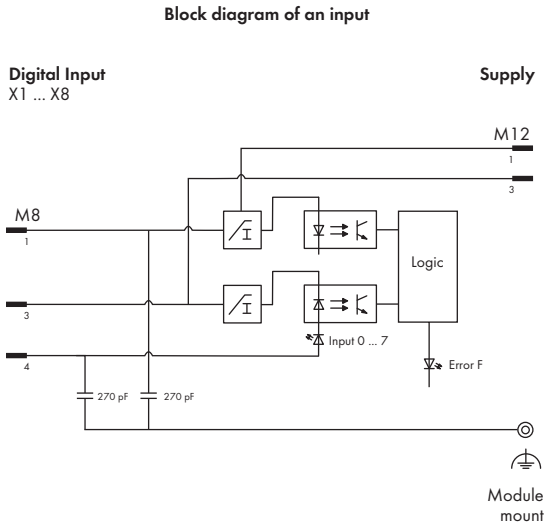

Technical Data

Digital inputs:	
Number of inputs	8
Connection type (2)	M8 connectors, 3 poles
Wire connection	2- or 3-wire
Input filter	parametrizable
Input characteristic	Type 1, acc. to IEC 61131-2
Signal voltage (0)	-3 V ... +5 V DC
Signal voltage (1)	+15 V ... +30 V DC
Input wiring	high-side switching
Input voltage	24 V DC (-30 V DC < U_{IN} < +30 V DC)
Input current (typ.)	2.8 mA
Cable length, unshielded	≤ 30 m
Wrong connection of inputs	No effect
System bus:	
Number of expendable modules	64
Connection type (3)	M12 connectors, B coded, 5 poles, shielded
Isolation:	
Channel – Channel	No
U_{LS}, U_A, system bus, fieldbus	500 V DC each
Service:	
Type	USB standard 1.1
Connection type (5)	M8 connectors, 4 poles
Standards and approvals:	
Conformity marking	CE
Korea Certification	
UL 508	
BVS 15 ATEX E 098 X	II 3G Ex nA IIC T5 Gc, II 3D Ex tc IIIB T90°C Dc
IECEx BVS 15.0083X	Ex nA IIC T5 Gc, Ex tc IIIB T90°C Dc
Configurable functions:	
Fieldbus coupler	see manual
Digital Inputs	
Input filter (per channel)	0.1/ 0.5/ 3 /15 /20 ms/ filter off
Inversion (per channel)	On/off
Online simulation (per channel)	Lock/unlock, simulation value: 0/1
Online simulation (per module)	Diagnostics
I/O diagnostics:	
I/O diagnostics (per module)	Short circuit/overload of sensor supply Undervoltage (U_{LS} + U_A)

Technical Data

Process image:	
Input process image	2048 bytes
Output process image	2048 bytes
LED indicators:	
MS : ETHERNET module status	LED (green/red)
NS : ETHERNET network status	LED (green/red)
ACT/LNK 1 : ETHERNET data exchange/network connection	LED (green)
ACT/LNK 2 : ETHERNET data exchange/network connection	LED (green)
CS : Fieldbus coupler status	LED (green/red)
SBM : System bus master status	LED (green/red)
F: Error status	LED (red)
0 ... 7: Input signal status	LED (yellow)
U_{LS} + U_A: Supply status	LED (green)
Indicators	Non-latching

General Specifications

Dimensions (mm) W x H x L	75 x 35.7 x 117
Weight	400 g

sercos Fieldbus Coupler

incl. 8 digital high-speed inputs (8 x M8)

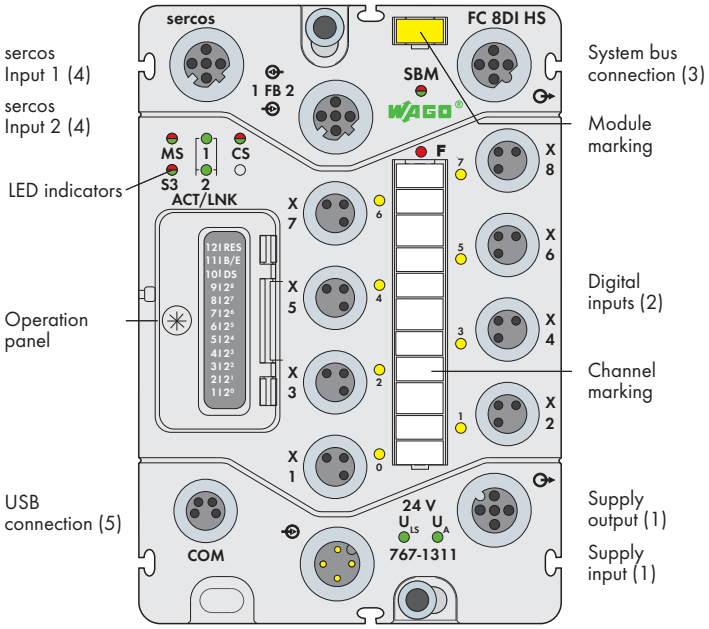

Short description:
This fieldbus coupler links the WAGO SPEEDWAY 767 system to the sercos network. It determines the structure of the station and generates the required process images of the configured inputs and outputs. Setting up the station can involve a mixed arrangement of analog, digital or complex I/O modules. The fieldbus coupler application allows access to the device as a sercos I/O device on the network. The sercos service channel (SVC), real-time channel (RTC) and IP channel (NRT) are supported for standard TCP/IP communication.
Two integrated ETHERNET ports allow easy creation of a line and ring structure without requiring additional components. Each port supports Auto MDI/MDI-X and automatically detects the direction of transmission, allowing both patch and crossover cables to be used. Assigning the sercos address can be performed via switch 10, either using the operation panel (switches) or software (retentive memory). In addition, the fieldbus coupler has 8 digital inputs to capture binary signals from switches and sensors.

Characteristics:
- 8 digital high-speed inputs, type 1 (IEC 61131)
- Hardware delay: 10 µs
- Modular and extendable by up to 64 I/O modules (via system port)
- USB interface for service purposes
- Configuration and parameter setting via SDDML device description file
- Parameter setting via FDT/DTM (incl. diagnostics and simulation)
- Sealable operation panel (operating mode and address switches)

Included:
- 1 x WMB marker, yellow
- 1 x channel marking strip
- 2 x M8 protective cap

Description	Item No.	Pack. Unit
FC sercos 8DI 24V DC HS	**767-1311**	1

Accessories	Item No.
ETHERNET cable + accessories	see pages 510 + 517
System bus/power supply cable + accessories	see pages 502 ... 507 + 516
General accessories	see pages 520 ... 521
DTM (Device Type Manager)	Download: www.wago.com
SDDML files	Download: www.wago.com

Technical Data	
Fieldbus:	
Device type	sercos I/O device
Connection type (4)	M12 connectors, D coded, 4 poles
Baud rate	100 Mbit/s, full duplex
Transmission medium	Copper cable (Cat. 5e, Class D)
Station address	0 – 511 (adjustable via operation panel or software)
Protocols	sercos v1.1.2, TCP/IP, FTP, HTTP
sercos services	SVC, RTC, CC, IP
sercos profiles	GDP_Basic, SCP_VarCfg, SCP_Sync, SCP_Diag, SCP_WD, SCP_NRT, FSP_IO
Module supply:	
Connection type (1)	M12 connectors, A coded, 4 poles
Current carrying capacity of supply connections	Max. 8 A (U_{LS}: 4 A, U_A: 4 A)
Supply voltage	
Logic and sensor voltage U_{LS}	24 VDC (-25 % ... +30 %)
Actuator voltage U_A	24 V DC (-25 % ... +30 %); Also required for power supply transmission
Supply current	
Logic and sensor current I_{LS}	typ. 140 mA + sensors (max. 400 mA)
Actuator current I_A	5mA
Protection	Reverse voltage protection for U_{LS} + U_A; short circuit protection for sensor supply

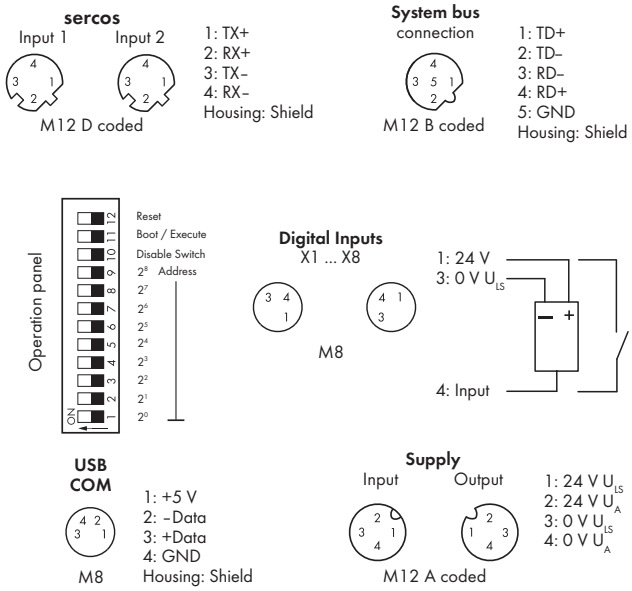

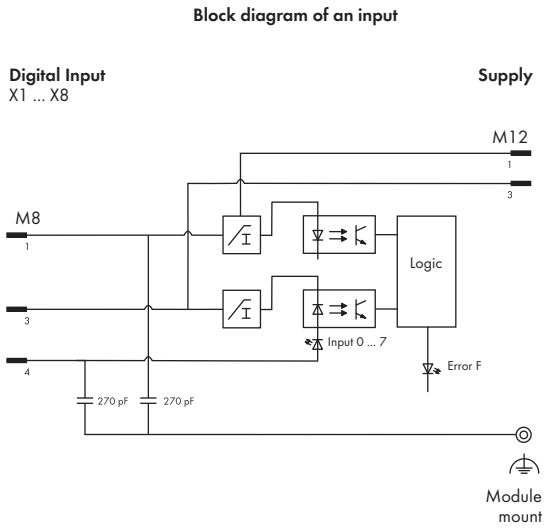

Technical Data

Digital inputs:	
Number of inputs	8
Connection type (2)	M8 connectors, 3 poles
Wire connection	2- or 3-wire
Input filter	Hardware: ≤ 10 µs, software parametrizable
	depending on operating mode
Hardware delay up to fieldbus	10 µs (direct mode)
Input characteristic	Type 1, acc. to IEC 61131-2
Signal voltage (0)	-3 VDC ... +5 VDC
Signal voltage (1)	+15 V ... +30 V DC
Input wiring	high-side switching
Input voltage	24 VDC (-30 VDC < U_{IN} < +30 VDC)
Input current (typ.)	2.8 mA
Cable length, unshielded	≤ 30 m
Wrong connection of inputs	No effect
System bus:	
Cycle time	min. 250 µs
Number of expendable modules	64
Connection type (3)	M12 connectors, B coded, 5 poles,
	shielded
Distance between two modules	20 m
Total extension per station	200 m
Isolation:	
Channel – Channel	No
U_{LS}, U_A, system bus, fieldbus	500 VDC each
Service:	
Type	USB standard 1.1
Connection type (5)	M8 connectors, 4 poles
Standards and approvals:	
Conformity marking	CE
UL 508	
BVS 15 ATEX E 098 X	II 3G Ex nA IIC T5 Gc,
	II 3D Ex tc IIIB T90°C Dc
IECEx BVS 15.0083X	Ex nA IIC T5 Gc,
	Ex tc IIIB T90°C Dc
Configurable functions:	
Fieldbus coupler	see manual
Digital Inputs	
Input filter (per channel)	depending on operating mode
	0.1/ 0.5/ 3 /15 /20 ms/ filter off
Inversion (per channel)	On/off
Online simulation (per channel)	Lock/unlock, simulation value: 0/1

Technical Data

I/O diagnostics:	
I/O diagnostics (per module)	Short circuit/overload of sensor supply
	Undervoltage (U_{LS} + U_A)
Process image:	
Input process image	2048 bytes
Output process image	2048 bytes
LED indicators:	
MS: Module status	LED (green/red)
S3: sercos status	LED (green/red)
ACT/LNK 1 : ETHERNET data	
exchange/network connection	LED (green)
ACT/LNK 2 : ETHERNET data	
exchange/network connection	LED (green)
CS : Fieldbus coupler status	LED (green/red)
SBM : System bus master status	LED (green/red)
F: Error status	LED (red)
0 ... 7: Input signal status	LED (yellow)
U_{LS} + U_A: Supply status	LED (green)
Indicators	Non-latching
Advanced features:	
Operating hours counter	Values in [h]
High-speed inputs	parametrizable, depending on operating
	mode (see manual)

General Specifications

Dimensions (mm) W x H x L	75 x 35.7 x 117
Weight	400 g

DeviceNet Fieldbus Coupler

incl. 8 digital inputs (8 x M8)

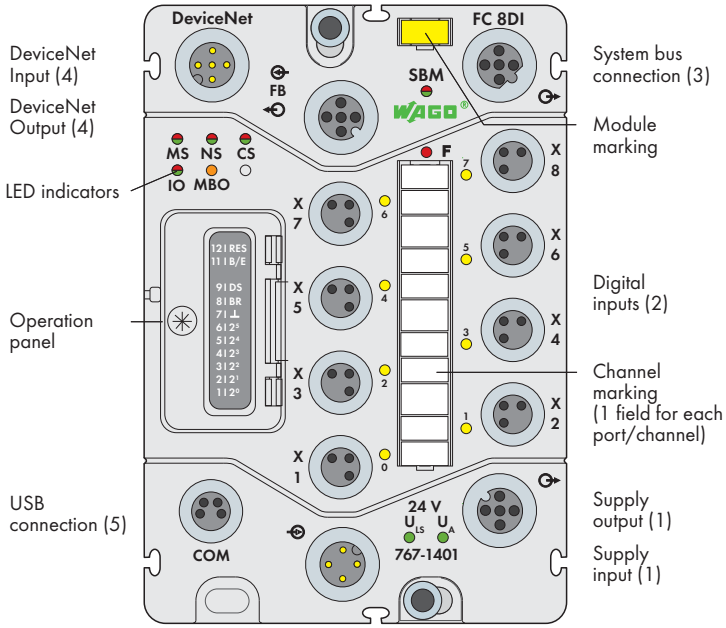

Short description:
DeviceNet is a manufacturer-independent, open CAN-based fieldbus protocol typically used for networking sensors and actuators with higher-level automation devices. It operates in both master-slave and multi-master modes, while active participants communicate via a point-to-point or a multipoint connection.
As a slave, the fieldbus coupler links the WAGO SPEEDWAY 767 system to DeviceNet. When initializing, the buscoupler determines the station's module structure and creates a process image of all inputs and outputs.

Characteristics:
- 8 digital 24VDC inputs included
- Modular and extendable up to 64 I/O modules (via system bus connection)
- USB interface for servicing purposes
- Parametrization via FDT/DTM (incl. diagnostics and simulation)
- Enclosed operation panel (operating mode and address switch)

Included:
- Module WMB marker card, yellow (1 pcs)
- Channel marker strips (1 pcs)
- M8 protective caps (2 pcs)

Description	Item No.	Pack. Unit
FC DeviceNet 8DI 24V DC	**767-1401**	1

Accessories	Item No.
DeviceNet cable + accessories	see pages 500 ... 501
System bus/power supply cable + accessories	see pages 502 ... 507 + 516
General accessories	see pages 520 ... 521
EDS files	Download: www.wago.com
DTM (Device Type Manager)	Download: www.wago.com

Technical Data	
Fieldbus:	
Device type	DevieNet Slave
Connection type (4)	M12 connectors, A coded, 5 poles
Baud rate	125/ 250/ 500 Kbit/s
Transmission medium	Copper cable
Station address	0-63 (adjustable via operation panel)
Additional data	see manual
Module supply:	
Connection type (1)	M12 connectors, A coded, 4 poles;
	Derating must be observed
Current carrying capacity of supply	
connections	Max. 8 A (U_{LS}: 4 A, U_A: 4 A)
Supply voltage	
Logic and sensor voltage U_{LS}	24 V DC (-25 % ... +30 %)
Actuator voltage U_A	24 V DC (-25 % ... +30 %);
	Also required for power supply transmission
Supply current	
Logic and sensor current I_{LS}	typ. 80 mA + sensors (max. 400 mA)
Actuator current I_A	5mA
Protection	Reverse voltage protection for U_{LS} + U_A;
	short circuit protection for sensor supply

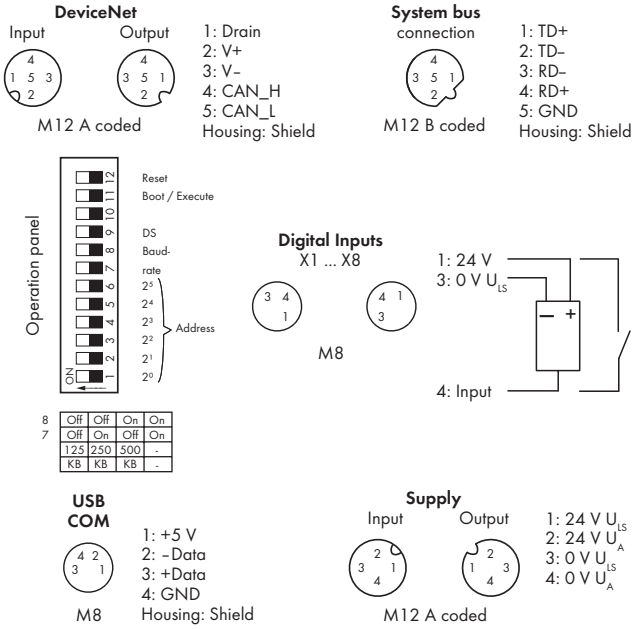

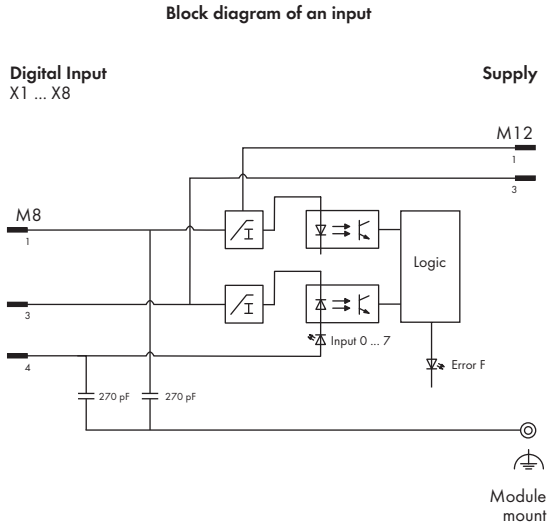

Technical Data

Digital inputs:	
Number of inputs	8
Connection type (2)	M8 connectors, 3 poles
Wire connection	2- or 3-wire
Input filter	parametrizable
Input characteristic	Type 1, acc. to IEC 61131-2
Signal voltage (0)	-3 V ... +5 V DC
Signal voltage (1)	+15 V ... +30 V DC
Input wiring	high-side switching
Input voltage	24 V DC (-30 V DC < U_{IN} < +30 V DC)
Input current (typ.)	2.8 mA
Cable length, unshielded	≤ 30 m
Wrong connection of inputs	No effect
System bus:	
Number of expendable modules	64
Connection type (3)	M12 connectors, B coded, 5 poles, shielded
Isolation:	
Channel – Channel	No
U_{LS}, U_A, system bus, fieldbus	500 V DC each
Service:	
Type	USB standard 1.1
Connection type (5)	M8 connectors, 4 poles
Standards and approvals:	
DeviceNet	IEC62026-3, EN50325-2
Conformity marking	CE
Korea Certification	
UL 508	
BVS 15 ATEX E 098 X	II 3G Ex nA IIC T5 Gc, II 3D Ex tc IIIB T90°C Dc
IECEx BVS 15.0083X	Ex nA IIC T5 Gc, Ex tc IIIB T90°C Dc
Configurable functions:	
Fieldbus coupler	see manual
Digital Inputs	
Input filter (per channel)	0.1/ 0.5/ 3 /15 /20 ms/ filter off
Inversion (per channel)	On/off
Online simulation (per channel)	Lock/unlock, simulation value: 0/1
Online simulation (per module)	Diagnostics
I/O diagnostics:	
I/O diagnostics (per module)	Short circuit/overload of sensor supply Undervoltage (U_{LS} + U_A)

Technical Data

Process image:	
Input process image	2048 bytes
Output process image	2048 bytes
LED indicators:	
MS: DeviceNet module status	LED (green/red)
IO: IO status	LED (green/red)
NS: DeviceNet network status	LED (green/red)
MBO: MAC-ID/Baud rate overwritten	LED (orange)
CS : Fieldbus coupler status	LED (green/red)
SBM : System bus master status	LED (green/red)
F: Error status	LED (red)
0 ... 7: Input signal status	LED (yellow)
U_{LS} + U_A: Supply status	LED (green)
Indicators	Non-latching

General Specifications

Dimensions (mm) W x H x L	75 x 35.7 x 117
Weight	388 g

CANopen Fieldbus Coupler

incl. 8 digital inputs (8 x M8)

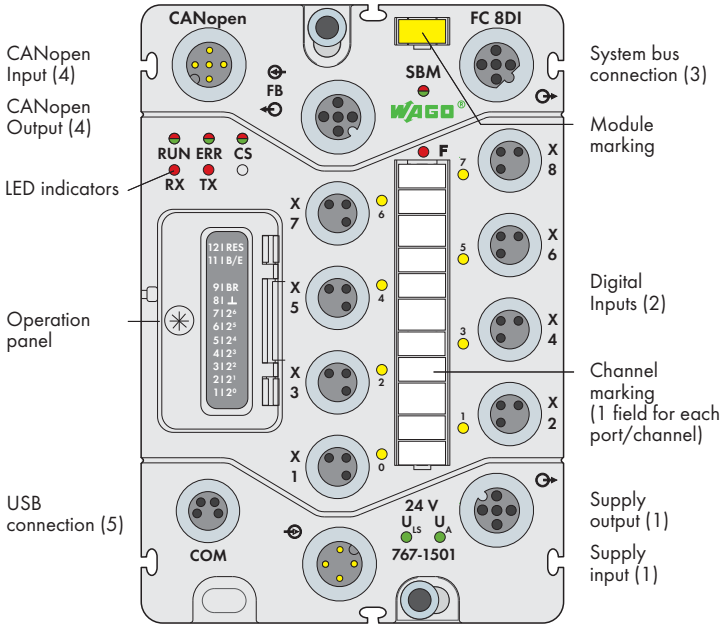

Short description:
CANopen is an industrial fieldbus protocol based on the Controller Area Network (CAN) system. CANopen links the WAGO SPEEDWAY 767 system as a slave to the master.
Data is transmitted using PDOs and SDOs. When initializing, the buscoupler determines the station's module structure and creates a process image of all inputs and outputs.
The process image is divided into two data zones containing: data received and data to be sent. Process data is available to the bus participants via object directory.

Characteristics:
- 8 digital 24VDC inputs included
- Modular and extendable up to 64 I/O modules (via system bus connection)
- USB interface for servicing purposes
- Parametrization via FDT/DTM (incl. diagnostics and simulation)
- Enclosed operation panel (operating mode and address switch)

Included:
- Module WMB marker card, yellow (1 pcs)
- Channel marker strips (1 pcs)
- M8 protective caps (2 pcs)

Description	Item No.	Pack. Unit
FC CANopen 8DI 24V DC	**767-1501**	1

Accessories	Item No.
CANopen cable + accessories	see pages 512 ... 513
System bus/power supply cable + accessories	see pages 502 ... 507 + 516
General accessories	see pages 520 ... 521
EDS files	Download: www.wago.com
DTM (Device Type Manager)	Download: www.wago.com

Technical Data	
Fieldbus:	
Device type	CANopen slave
Connection type (4)	M12 connectors, A coded, 5 poles
Baud rate	125/ 500/ 1000 Kbits
	Auto-baudrate detection
Transmission medium	Copper cable
Station address	1-127 (adjustable via operation panel)
Protocols	CANopen acc. to DS-301 V4.01
Additional data	acc. to device profile DS 401 V2.0
Module supply:	
Connection type (1)	M12 connectors, A coded, 4 poles;
	Derating must be observed
Current carrying capacity of supply	
connections	Max. 8 A (U_{LS}: 4 A, U_A: 4 A)
Supply voltage	
Logic and sensor voltage U_{LS}	24 V DC (-25 % ... +30 %)
Actuator voltage U_A	24 V DC (-25 % ... +30 %);
	Also required for power supply transmission
Supply current	
Logic and sensor current I_{LS}	typ. 85 mA + sensors (max. 400 mA)
Actuator current I_A	5mA
Protection	Reverse voltage protection for U_{LS} + U_A;
	short circuit protection for sensor supply

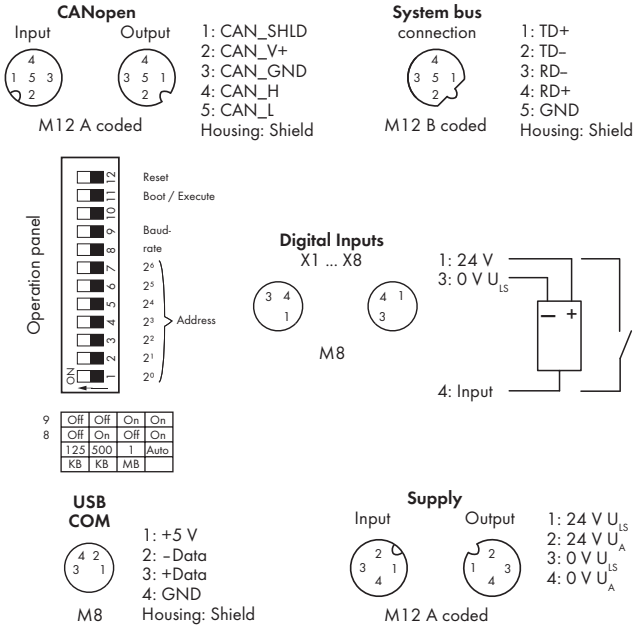

Off	Off	On	On	
Off	On	Off	On	
125	500	1	Auto	
KB	KB	MB		

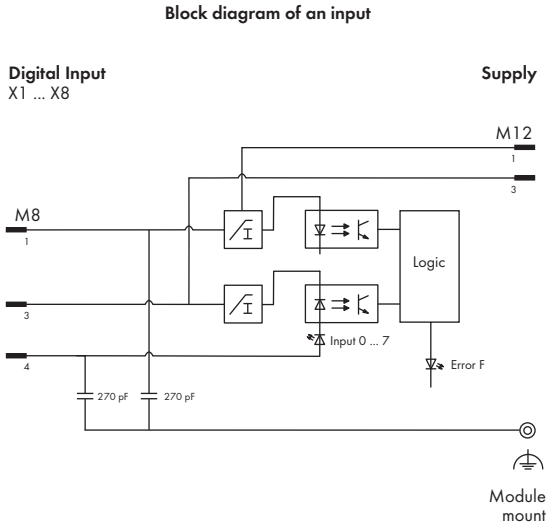

Technical Data

Digital inputs:	
Number of inputs	8
Connection type (2)	M8 connectors, 3 poles
Wire connection	2- or 3-wire
Input filter	parametrizable
Input characteristic	Type 1, acc. to IEC 61131-2
Signal voltage (0)	-3 V ... +5 V DC
Signal voltage (1)	+15 V ... +30 V DC
Input wiring	high-side switching
Input voltage	24 V DC (-30 V DC < U_{IN} < +30 V DC)
Input current (typ.)	2.8 mA
Cable length, unshielded	≤ 30 m
Wrong connection of inputs	No effect
System bus:	
Number of expendable modules	64
Connection type (3)	M12 connectors, B coded, 5 poles, shielded
Isolation:	
Channel – Channel	No
U_{LS}, U_A, system bus, fieldbus	500 V DC each
Service:	
Type	USB standard 1.1
Connection type (5)	M8 connectors, 4 poles
Standards and approvals:	
Conformity marking	CE
Korea Certification	
UL 508	
BVS 15 ATEX E 098 X	II 3G Ex nA IIC T5 Gc, II 3D Ex tc IIIB T90°C Dc
IECEx BVS 15.0083X	Ex nA IIC T5 Gc, Ex tc IIIB T90°C Dc
Configurable functions:	
Fieldbus coupler	see manual
Digital Inputs	
Input filter (per channel)	0.1/ 0.5/ 3 /15 /20 ms/ filter off
Inversion (per channel)	On/off
Online simulation (per channel)	Lock/unlock, simulation value: 0/1
Online simulation (per module)	Diagnostics
I/O diagnostics:	
I/O diagnostics (per module)	Short circuit/overload of sensor supply Undervoltage (U_{LS} + U_A)

Technical Data

Process image:	
Input process image	512 bytes
Output process image	512 bytes
LED indicators:	
RUN: CANopen status	LED (green)
RX: CANopen receiver buffer	LED (red)
ERR: CANopen bus error	LED (red)
TX: CANopen transmit buffer	LED (red)
CS : Fieldbus coupler status	LED (green/red)
SBM : System bus master status	LED (green/red)
F: Error status	LED (red)
0 ... 7: Input signal status	LED (yellow)
U_{LS} + U_A: Supply status	LED (green)
Indicators	Non-latching

General Specifications

Dimensions (mm) W x H x L	75 x 35.7 x 117
Weight	377 g

Digital Input Module 24 V DC

8 inputs (8 x M8)

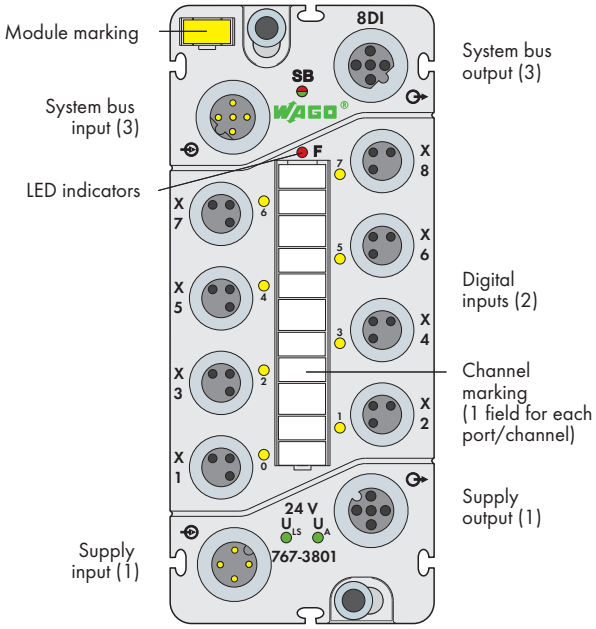

Short description:
This digital input module records binary signals from switches, sensors and proximity switches (BEROs).

Included:
- 1 x WMB marker, yellow
- 1 x marking strip
- 2 x M8 protective cap

Characteristics:
- 8 digital inputs, 24VDC
- Diagnostic capable (per module)
- Parametrizable (filter, inversion, online simulation and diagnostics)

Description	Item No.	Pack. Unit
8DI 24V DC (8xM8)	**767-3801**	1

Accessories	Item No.
Marking strips, marking pen, spacer module and protective caps	see pages 520 ... 521
IP67 cables and connectors	see pages 502 ... 517 + Section 11

Technical Data	
Module supply:	
Connection type (1)	M12 connectors, A coded, 4 poles;
	Derating must be observed
Current carrying capacity of supply	
connections	Max. 8 A (U_{LS}: 4 A, U_A: 4 A)
Supply voltage	
Logic and sensor voltage U_{LS}	24 V DC (-25 % ... +30 %)
Actuator voltage U_A	24 V DC (-25 % ... +30 %);
	Also required for power supply transmission
Supply current	
Logic and sensor current I_{LS}	typ. 40 mA + sensors (max. 400 mA)
Actuator current I_A	5 mA
Protection	Reverse voltage protection for U_{LS} + U_A;
	short circuit protection for sensor supply
Digital inputs:	
Number of inputs	8
Connection type (2)	M8 connectors, 3 poles
Wire connection	2- or 3-wire
Input filter	Hardware: ≤ 80 µs
	Software: parametrizable
Input characteristic	Type 2, acc. to IEC 61131-2
Signal voltage (0)	-3 V ... +5 V DC
Signal voltage (1)	+11 V ... +30 V DC
Input wiring	high-side switching
Input voltage	24 V DC (-30 V DC < U_{IN} < +30 V DC)
Input current (typ.)	7.3 mA
Connection of 2-wire BEROs	max. 1.5 mA admissible closed current
Cable length, unshielded	≤ 30 m
Wrong connection of inputs	No effect

System bus

M12 B coded

1: RD+/TD+
2: RD–/TD–
3: TD–/RD–
4: TD+/RD+
5: GND
Housing: Shield

Digital Inputs
X1 ... X8

M8

1: 24 V
3: 0 V U_{LS}

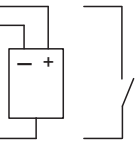

4: Input

Supply

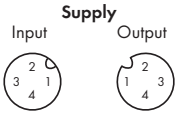

M12 A coded

1: 24 V U_{LS}
2: 24 V U_A
3: 0 V U_{LS}
4: 0 V U_A

Block diagram of an input

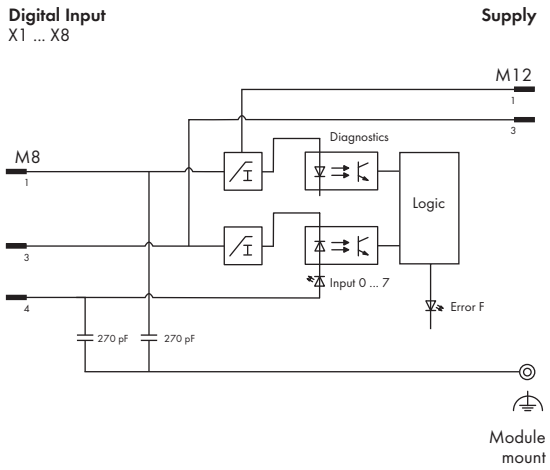

Technical Data

Input characteristic:	
Input voltage	Typical input current
-30 V DC < U_{IN} < 0 V DC	0
5 V	2.4 mA
11 V	6.4 mA
24 V	7.3 mA
30 V	7.4 mA
System bus:	
Connection type (3)	M12 connectors, B coded, 5 poles, shielded
Standards and approvals:	
Conformity marking	CE
Korea Certification	
UL 508	
BVS 15 ATEX E 098 X	II 3G Ex nA IIC T5 Gc, II 3D Ex tc IIIB T90°C Dc
IECEx BVS 15.0083X	Ex nA IIC T5 Gc, Ex tc IIIB T90°C Dc

Technical Data

Isolation:	
Channel – Channel	No
U_{LS}, U_A, system bus	500 V DC each
Configurable functions:	
Input filter (per channel)	0.1/ 0.5/ 3 /15 /20 ms/ filter off
Inversion (per channel)	On/off
Online simulation (per channel)	Lock/unlock, simulation value: 0/1
Online simulation (per module)	Diagnostics
I/O diagnostics:	
I/O diagnostics (per module)	Short circuit/overload of sensor supply
	Undervoltage (U_{LS} + U_A)
Process image:	
Process data width	1-byte data + status
LED indicators:	
SB: System bus status	LED (green/red/orange)
F: Error status	LED (red)
0 ... 7: Input signal status	LED (yellow)
U_{LS} + U_A: Supply status	LED (green)
Indicators	Non-latching

General Specifications

Dimensions (mm) W x H x L	50 x 35.7 x 117
Weight	270 g

Digital Input Module 24 V DC

8 inputs (4 x M12, two outputs per connector)

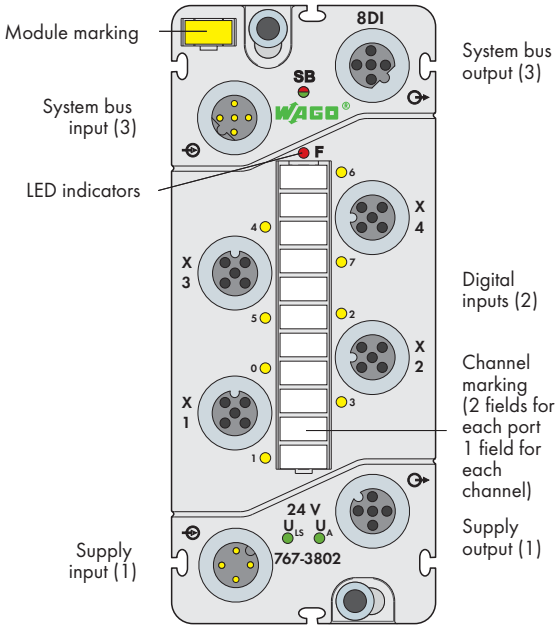

Short description:
Digital input module records binary signals from switches, sensors and proximity switches (BEROs).

Characteristics:
- 8 digital inputs DC 24 V
- Diagnostic capable (per module)
- Parametrizable (filter, inversion, online simulation and diagnostics)

Included:
- Module WMB marker card, yellow (1 pcs)
- Marker strips (1 pcs)
- M12 protective caps (2 pcs)

Description	Item No.	Pack. Unit
8DI 24V DC (4xM12)	**767-3802**	1

Accessories	Item No.
Marking strips, marking pen, spacer module and protective caps	see pages 520 ... 521
IP67 cables and connectors	see pages 502 ... 517 + Section 11

Technical Data	
Module supply:	
Connection type (1)	M12 connectors, A coded, 4 poles;
	Derating must be observed
Current carrying capacity of supply	
connections	Max. 8 A (U_{LS}: 4 A, U_A: 4 A)
Supply voltage	
Logic and sensor voltage U_{LS}	24 V DC (-25 % ... +30 %)
Actuator voltage U_A	24 V DC (-25 % ... +30 %);
	Also required for power supply transmission
Supply current	
Logic and sensor current I_{LS}	typ. 40 mA + sensors (max. 400 mA)
Actuator current I_A	5 mA
Protection	Reverse voltage protection for U_{LS} + U_A;
	short circuit protection for sensor supply
Digital inputs:	
Number of inputs	8
Connection type (2)	M12 connectors, A coded, 4 poles
Wire connection	2- or 3-wire
Input filter	Hardware: ≤ 80 µs
	Software: parametrizable
Input characteristic	Type 2, acc. to IEC 61131-2
Signal voltage (0)	-3 V ... +5 V DC
Signal voltage (1)	+11 V ... +30 V DC
Input wiring	high-side switching
Input voltage	24 V DC (-30 V DC < U_{IN} < +30 V DC)
Input current (typ.)	7.3 mA
Connection of 2-wire BEROs	max. 1.5 mA admissible closed current
Cable length, unshielded	≤ 30 m
Wrong connection of inputs	No effect

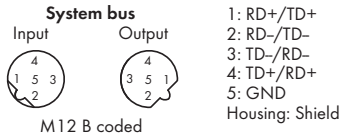

1: RD+/TD+
2: RD–/TD–
3: TD–/RD–
4: TD+/RD+
5: GND
Housing: Shield

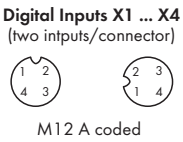

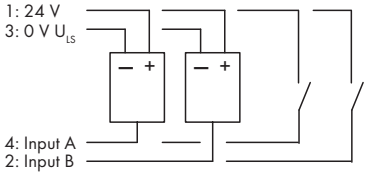

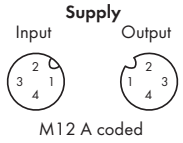

1: 24 V U_{LS}
2: 24 V U_A
3: 0 V U_{LS}
4: 0 V U_A

Block diagram of an input

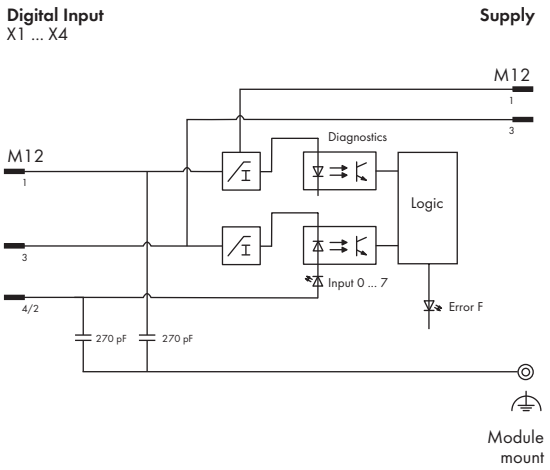

Technical Data

Input characteristic:	
Input voltage	Typical input current
-30 V DC < U_{IN} < 0 V DC	0
5 V	2.4 mA
11 V	6.4 mA
24 V	7.3 mA
30 V	7.4 mA
System bus:	
Connection type (3)	M12 connectors, B coded, 5 poles, shielded
Standards and approvals:	
Conformity marking	CE
Korea Certification	
UL 508	
BVS 15 ATEX E 098 X	II 3G Ex nA IIC T5 Gc, II 3D Ex tc IIIB T90°C Dc
IECEx BVS 15.0083X	Ex nA IIC T5 Gc, Ex tc IIIB T90°C Dc

Technical Data

Isolation:	
Channel – Channel	No
U_{LS}, U_A, system bus	500 V DC each
Configurable functions:	
Input filter (per channel)	0.1/ 0.5/ 3 /15 /20 ms/ filter off
Inversion (per channel)	On/off
Online simulation (per channel)	Lock/unlock, simulation value: 0/1
Online simulation (per module)	Diagnostics
I/O diagnostics:	
I/O diagnostics (per module)	Short circuit/overload of sensor supply
	Undervoltage (U_{LS} + U_A)
Process image:	
Process data width	1-byte data + status
LED indicators:	
SB: System bus status	LED (green/red/orange)
F: Error status	LED (red)
0 ... 7: Input signal status	LED (yellow)
U_{LS} + U_A: Supply status	LED (green)
Indicators	Non-latching

General Specifications

Dimensions (mm) W x H x L	50 x 35.7 x 117
Weight	282 g

Digital Input Module 24 V DC

8 inputs (8 x M8), low-side switching

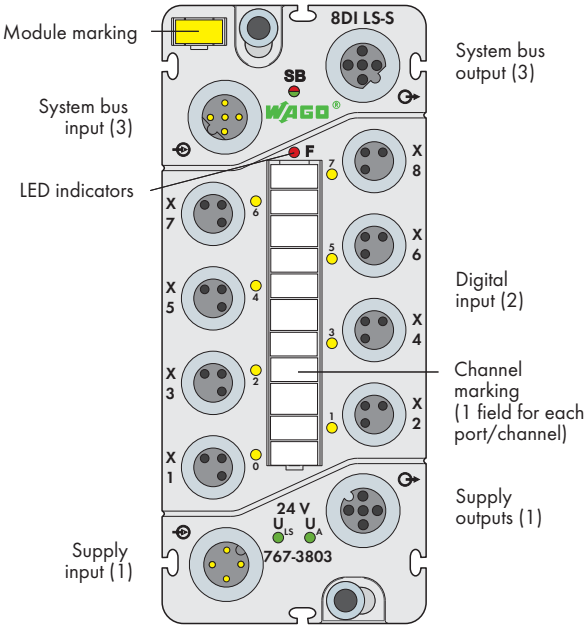

Short description:
This digital input module records binary signals from switches, sensors and proximity switches (BEROs).

Characteristics:
- 8 digital inputs DC 24 V, low-side switching
- Diagnostic capable (per module)
- Parametrizable (filter, inversion, online simulation and diagnostics)

Included:
- Module WMB marker card, yellow
- Marker strip
- M8 protective caps (2 pcs)

Description	Item No.	Pack. Unit
8DI 24V DC LS SWITCH (8xM8)	**767-3803**	1

Accessories	Item No.
Marking strips, marking pen, spacer module and protective caps	see pages 520 ... 521
IP67 cables and connectors	see pages 502 ... 517 + Section 11

Technical Data	
Module supply:	
Connection type (1)	M12 connectors, A coded, 4 poles;
	Derating must be observed
Current carrying capacity of supply	
connections	Max. 8 A (U_{LS}: 4 A, U_A: 4 A)
Supply voltage	
Logic and sensor voltage U_{LS}	24 V DC (-25 % ... +30 %)
Actuator voltage U_A	24 V DC (-25 % ... +30 %);
	Also required for power supply transmission
Supply current	
Logic and sensor current I_{LS}	Typ. 40 mA + sensors (max. 400 mA)
Actuator current I_A	5mA
Protection	Reverse voltage protection for U_{LS} + U_A;
	Short circuit protection for sensor supply
Digital inputs:	
Number of inputs	8
Connection type (2)	M8 connectors, 3 poles
Wire connection	2- or 3-wire
Input filter	HW: ≤ 80 µs
	SW: parametrizable
Signal voltage (0)	(U_{LS} - 5V) ... U_{LS}
Signal voltage (1)	- 3V ... (U_{LS} - 11V)
Input wiring	Low-side switching
Input voltage	24 V DC (-3 V DC < U_{IN} < +30 V DC)
Input current (typ.)	7mA
Connection of 2-wire BEROs	Permitted bias current: max. 1.5 mA
Cable length, unshielded	≤ 30 m
Wrong connection of inputs	No effect

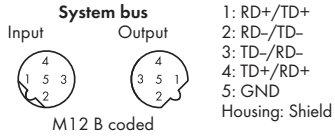

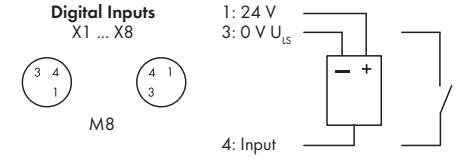

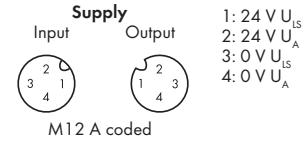

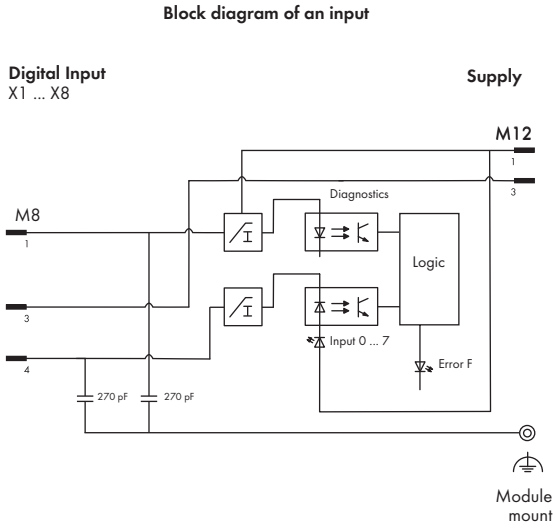

Technical Data

Input characteristic:	
Input voltage	Typical input current
U_{IN}	0mA
U_{IN} - 5V	2.2 mA
U_{IN} - 11V	6.1 mA ... 6.3 mA
-3 V < U_{IN} < 0 V	7mA
System bus:	
Connection type (3)	M12 connectors, B coded, 5 poles, shielded
Standards and approvals:	
Conformity marking	CE
Korea Certification	KC
UL 508	
BVS 15 ATEX E 098 X	II 3G Ex nA IIC T5 Gc, II 3D Ex tc IIIB T90°C Dc
IECEx BVS 15.0083X	Ex nA IIC T5 Gc, Ex tc IIIB T90°C Dc

Technical Data

Isolation:	
Channel – Channel	No
U_{LS}, U_A, system bus	500 V DC each
Configurable functions:	
Input filter (per channel)	0.1/ 0.5/ 3 /15 /20 ms/ filter off
Inversion (per channel)	On/off
Online simulation (per channel)	Lock/unlock, simulation value: 0/1
Online simulation (per module)	Diagnostics
I/O diagnostics:	
I/O diagnostics (per module)	Short circuit/overload of sensor supply
	Undervoltage (U_{LS} + U_A)
Process image:	
Process data width	1-byte data + status
LED indicators:	
SB: System bus status	LED (green/red/orange)
F: Error status	LED (red)
0 ... 7: Input signal status	LED (yellow)
U_{LS} + U_A: Supply status	LED (green)
Indicators	Non-latching

General Specifications

Dimensions (mm) W x H x L	50 x 35.7 x 117
Weight	270 g

Digital Input Module 24 V DC

8 inputs (4 x M12, two inputs per connector), low-side switching

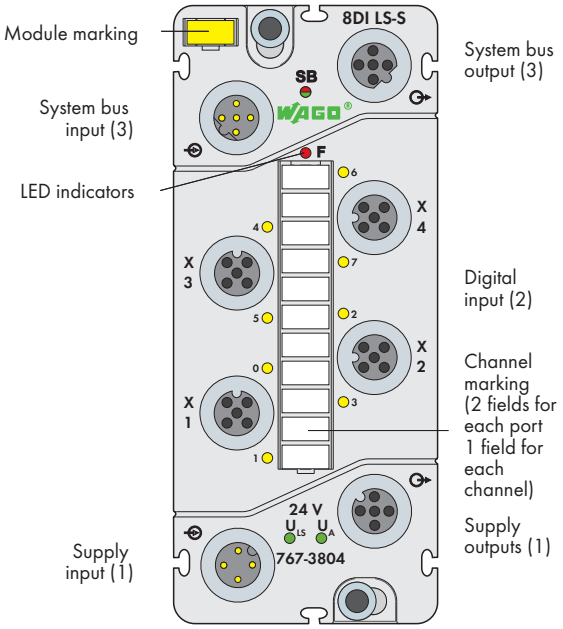

Short description:
This digital input module records binary signals from switches, sensors and proximity switches (BEROs).

Characteristics:
- 8 digital inputs DC 24 V, low-side switching
- Diagnostic capable (per module)
- Parametrizable (filter, inversion, online simulation and diagnostics)

Included:
- Module WMB marker card, yellow
- Marker strip
- M12 protective caps (2 pcs)

Description	Item No.	Pack. Unit
8DI 24V DC LS SWITCH (4xM12)	**767-3804**	1

Accessories	Item No.
Marking strips, marking pen, spacer module and protective caps	see pages 520 ... 521
IP67 cables and connectors	see pages 502 ... 517 + Section 11

Technical Data	
Module supply:	
Connection type (1)	M12 connectors, A coded, 4 poles;
	Derating must be observed
Current carrying capacity of supply	
connections	Max. 8 A (U_{LS}: 4 A, U_A: 4 A)
Supply voltage	
Logic and sensor voltage U_{LS}	24 V DC (-25 % ... +30 %)
Actuator voltage U_A	24 V DC (-25 % ... +30 %);
	Also required for power supply transmission
Supply current	
Logic and sensor current I_{LS}	Typ. 40 mA + sensors (max. 400 mA)
Actuator current I_A	5mA
Protection	Reverse voltage protection for U_{LS} + U_A;
	Short circuit protection for sensor supply
Digital inputs:	
Number of inputs	8
Connection type (2)	M12 connectors, A coded, 4 poles
Wire connection	2- or 3-wire
Input filter	HW: ≤ 80 µs
	SW: parametrizable
Signal voltage (0)	(U_{LS} - 5V) ... U_{LS}
Signal voltage (1)	- 3V ... (U_{LS} - 11V)
Input wiring	Low-side switching
Input voltage	24 V DC (-3 V DC < U_{IN} < +30 V DC)
Input current (typ.)	7mA
Connection of 2-wire BEROs	Permitted bias current: max. 1.5 mA
Cable length, unshielded	≤ 30 m
Wrong connection of inputs	No effect

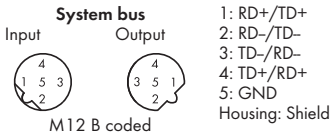

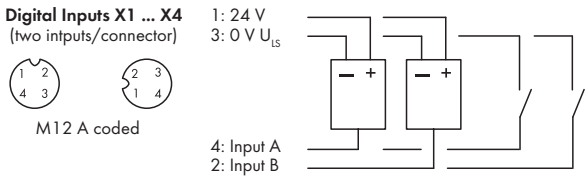

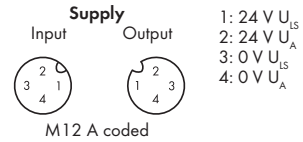

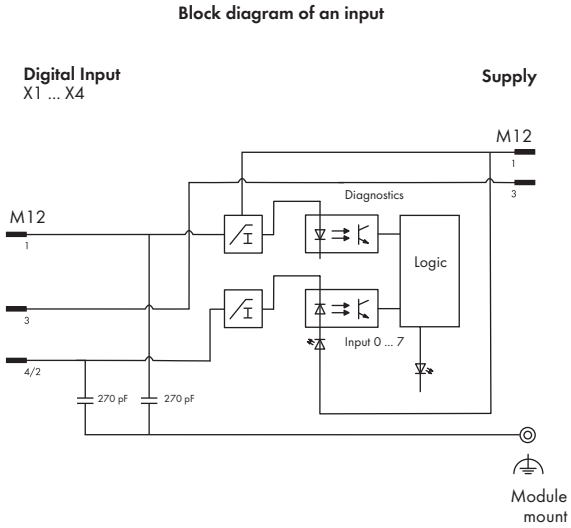

Technical Data

Input characteristic:	
Input voltage	Typical input current
U_{IN}	0mA
U_{IN} - 5V	2.2 mA
U_{IN} - 11V	6.1 mA ... 6.3 mA
-3 V < U_{IN} < 0 V	7mA
System bus:	
Connection type (3)	M12 connectors, B coded, 5 poles, shielded
Standards and approvals:	
Conformity marking	CE
Korea Certification	
UL 508	
BVS 15 ATEX E 098 X	II 3G Ex nA IIC T5 Gc, II 3D Ex tc IIIB T90°C Dc
IECEx BVS 15.0083X	Ex nA IIC T5 Gc, Ex tc IIIB T90°C Dc

Technical Data

Isolation:	
Channel – Channel	No
U_{LS}, U_A, system bus	500 V DC each
Configurable functions:	
Input filter (per channel)	0.1/ 0.5/ 3 /15 /20 ms/ filter off
Inversion (per channel)	On/off
Online simulation (per channel)	Lock/unlock, simulation value: 0/1
Online simulation (per module)	Diagnostics
I/O diagnostics:	
I/O diagnostics (per module)	Short circuit/overload of sensor supply
	Undervoltage (U_{LS} + U_A)
Process image:	
Process data width	1-byte data + status
LED indicators:	
SB: System bus status	LED (green/red/orange)
F: Error status	LED (red)
0 ... 7: Input signal status	LED (yellow)
U_{LS} + U_A: Supply status	LED (green)
Indicators	Non-latching

General Specifications

Dimensions (mm) W x H x L	50 x 35.7 x 117
Weight	270 g

Digital Input Module 24 V DC

8 inputs (8 x M12)

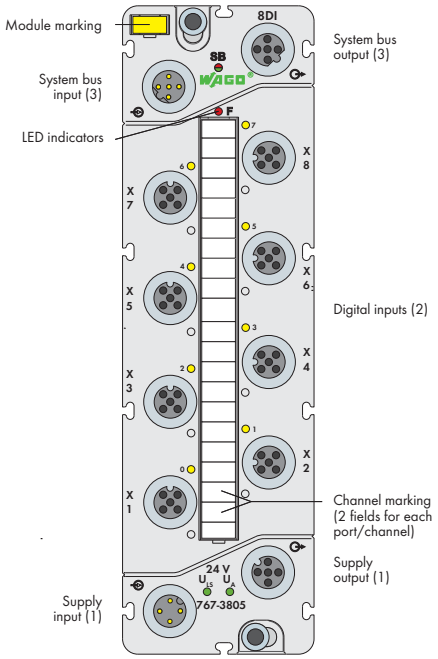

Short description:
This digital input module records binary signals from switches, sensors and proximity switches (BEROs).

Included:
- 1 x WMB marker, yellow
- 1 x marking strip
- 2 x M12 protective cap

Characteristics:
- 8 digital inputs, 24VDC
- Diagnostic capable (per module)
- Parametrizable (filter, inversion, online simulation and diagnostics)

Description	Item No.	Pack. Unit
8DI 24V DC (8xM12)	**767-3805**	1

Accessories	Item No.
Marking strips, marking pen, spacer module and protective caps	see pages 520 ... 521
IP67 cables and connectors	see pages 502 ... 517 + Section 11

Technical Data	
Module supply:	
Connection type (1)	M12 connectors, A coded, 4 poles;
	Derating must be observed
Current carrying capacity of supply	
connections	max. 8 A (U_{LS}: 4 A, U_A: 4 A)
Supply voltage	
Logic and sensor voltage U_{LS}	24 V DC (-25 % ... +30 %)
Actuator voltage U_A	24 V DC (-25 % ... +30 %);
	Also required for power supply transmission
Supply current	
Logic and sensor current I_{LS}	typ. 40 mA + sensors (max. 400 mA)
Actuator current I_A	5 mA
Protection	Reverse voltage protection for U_{LS} + U_A
	Short-circuit protection for sensor/actuator
	supply
Digital inputs:	
Number of inputs	8
Connection type (2)	M12 connectors, A coded, 4 poles
Wire connection	2- or 3-wire
Input filter	Hardware: ≤ 80 µs
	Software: parametrizable
Input characteristic	Type 2, acc. to IEC 61131-2
Signal voltage (0)	-3 V ... +5 V DC
Signal voltage (1)	+11 V ... +30 V DC
Input wiring	High-side switching
Input voltage	24 V DC (-30 V DC < U_{IN} < +30 V DC)
Input current (typ.)	7.3 mA
Connection of 2-wire BEROs	max. 1.5 mA admissible closed current
Cable length, unshielded	≤ 30 m
Wrong connection of inputs	No effect

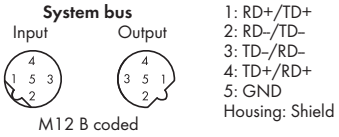

1: RD+/TD+
2: RD–/TD–
3: TD–/RD–
4: TD+/RD+
5: GND
Housing: Shield

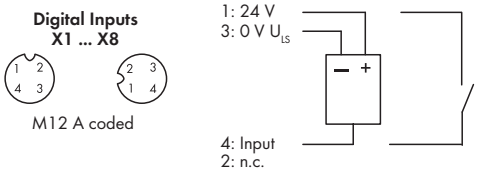

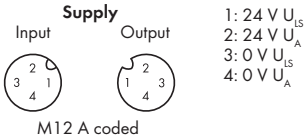

1: 24 V U_{LS}
2: 24 V U_A
3: 0 V U_{LS}
4: 0 V U_A

Block diagram of an input

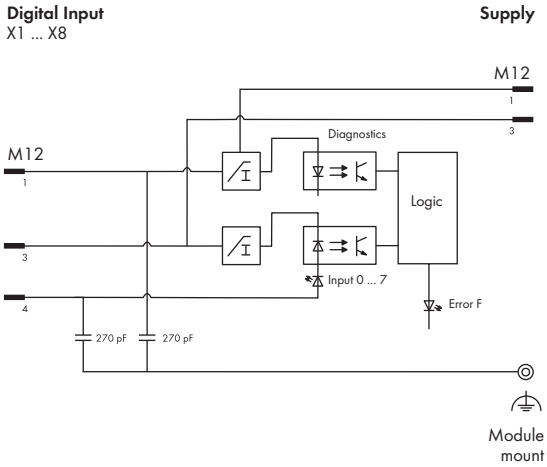

Technical Data

Input characteristic:	
Input voltage	Typical input current
-30 V DC < U_{IN} < 0 V DC	0
5 V	2.4 mA
11 V	6.4 mA
24 V	7.3 mA
30 V	7.4 mA
System bus:	
Connection type (3)	M12 connectors, B coded, 5 poles, shielded
Standards and approvals:	
Conformity marking	CE
Korea Certification	
UL 508	
BVS 15 ATEX E 098 X	II 3G Ex nA IIC T5 Gc, II 3D Ex tc IIIB T90°C Dc
IECEx BVS 15.0083X	Ex nA IIC T5 Gc, Ex tc IIIB T90°C Dc

Technical Data

Isolation:	
Channel – Channel	no
U_{LS}, U_A, system bus	500 V DC each
Configurable functions:	
Input filter (per channel)	0.1/ 0.5/ 3 /15 /20 ms/ filter off
Inversion (per channel)	On/off
Online simulation (per channel)	Lock/unlock; simulation value: 0/1
Online simulation (per module)	Diagnostics
I/O diagnostics:	
I/O diagnostics (per module)	Short circuit/overload of sensor supply
	Undervoltage (U_{LS} + U_A)
Process image:	
Process data width	1-byte data + status
LED indicators:	
SB: System bus status	LED (green/red/orange)
F: Error status	LED (red)
0 ... 7: Input signal status	LED (yellow)
U_{LS} + U_A: Supply status	LED (green)
Indicators	Non-latching

General Specifications

Dimensions (mm) W x H x L	50 x 35.7 x 170
Weight	387 g

Digital Input Module, 24 VDC, High Speed

8 inputs (4 x M12, two inputs per connector)

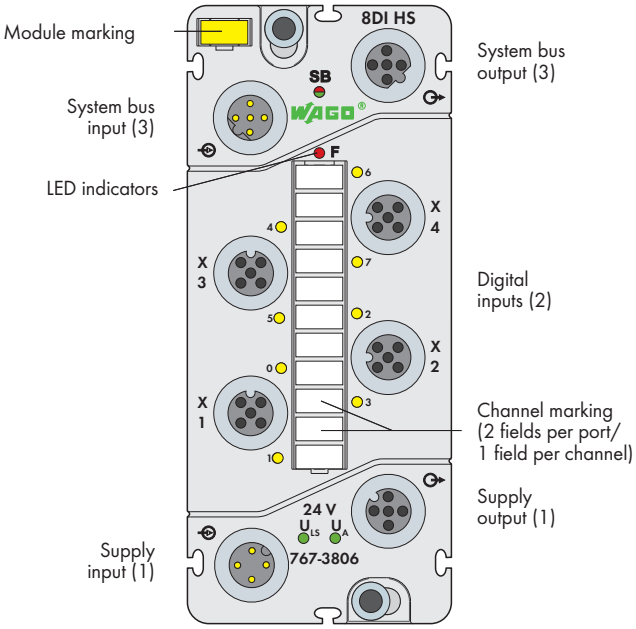

Short description:
This digital input module records binary signals from sensors with short response times.
The 767-3806 Module features high-speed inputs, making it ideal for use with fast ETHERNET-based fieldbus systems (e.g., sercos).

Included:
- 1 x WMB marker, yellow
- 1 x marking strip
- 2 x M12 protective cap

Features:
- 8 digital inputs, 24 VDC
- Front-end cycle time (hardware) max. 6 µs
- Diagnostic-capable (module by module)
- Parametrizable (filter, inversion, online simulation and diagnostics)

Description	Item No.	Pack. Unit
8DI 24VDC HS (4xM12)	**767-3806**	1

Accessories	Item No.
Marking strips, marking pen, spacer module and protective caps	see pages 520 ... 521
IP67 cables and connectors	see pages 502 ... 517 + Section 11

Technical Data	
Module supply:	
Connection type (1)	M12 connectors, A coded, 4 poles;
	Derating must be observed
Current carrying capacity of supply	
connections	Max. 8 A (U_{LS}: 4 A, U_A: 4 A)
Supply voltage	
Logic and sensor voltage U_{LS}	24 V DC (-25 % ... +30 %)
Actuator voltage U_A	24 V DC (-25 % ... +30 %);
	Also required for power supply transmission
Supply current	
Logic and sensor current I_{LS}	typ. 45 mA + sensors (max. 1.0 A)
Actuator current I_A	5 mA
Protection	Reverse voltage protection for U_{LS} + U_A;
	short circuit protection for sensor supply
Digital inputs:	
Number of inputs	8
Connection type (2)	M12 connectors, A coded, 5 poles,
	shielded
Wire connection	2- or 3-wire
Front-end cycle time (hardware)	max. 6 µs
Front-end jitter/skew (input)	< 2 µs
Input characteristic	Type 3, acc. to IEC 61131-2
Signal voltage (0)	-3 V ... +5 V DC
Signal voltage (1)	+11 V ... +30 V DC
Input wiring	high-side switching
Input voltage	24 VDC (-3 VDC < U_{IN} < +30 VDC)
Input current (typ.)	2.8 mA
Connection of 2-wire BEROs	max. 1.5 mA admissible closed current
Cable length, unshielded	≤ 30 m
Wrong connection of inputs	No effect

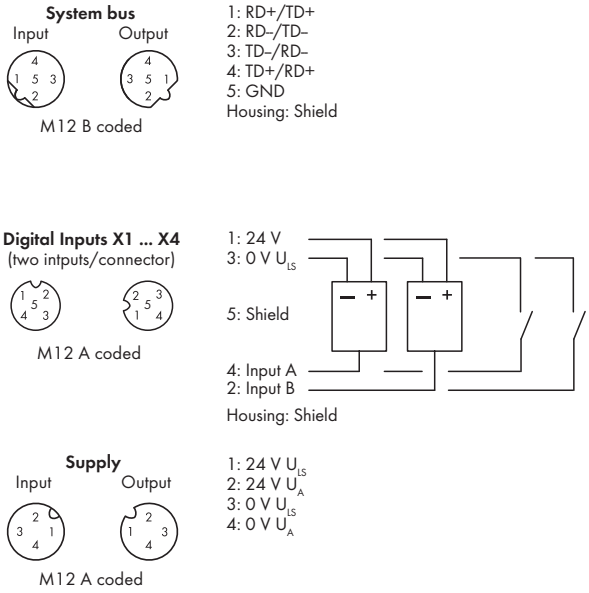

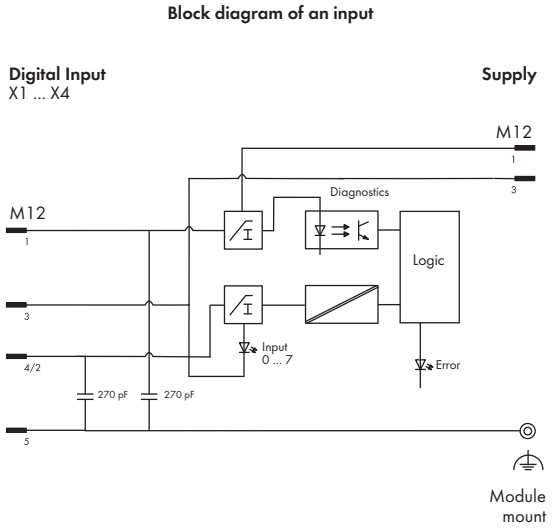

Technical Data

Input characteristic:	
Input voltage	Typical input current
0 V	0 mA
5 V	1.6 mA
11 V	2.7 mA
24 V	2.8 mA
30 V	2.8 mA
System bus:	
Connection type (3)	M12 connectors, B coded, 5 poles, shielded
Standards and approvals:	
Conformity marking	CE
UL 508	
BVS 15 ATEX E 098 X	II 3G Ex nA IIC T5 Gc, II 3D Ex tc IIIB T90°C Dc
IECEx BVS 15.0083X	Ex nA IIC T5 Gc, Ex tc IIIB T90°C Dc

Technical Data

Isolation:	
Channel – Channel	No
U_{LS}, U_A, system bus	500 VDC each
Configurable functions:	
Input filter (per channel)	10/ 25/ 50/ 100/ 200 µs/ 1/ 3 ms/ filter off
Inversion (per channel)	On/off
Online simulation (per channel)	Lock/unlock, simulation value: 0/1
Online simulation (per module)	Diagnostics
I/O diagnostics:	
I/O diagnostics (per module)	Short circuit/overload of sensor supply Undervoltage (U_{LS} + U_A)
Process image:	
Process data width	1-byte data + status
LED indicators:	
SB: System bus status	LED (green/red/orange)
F: Error status	LED (red)
0 ... 7: Input signal status	LED (yellow)
U_{LS} + U_A: Supply status	LED (green)
Indicators	Non-latching

General Specifications

Dimensions (mm) W x H x L	50 x 35.7 x 117
Weight	270 g

Digital Output Module 24 V DC / 0.5 A

8 outputs (8 x M8)

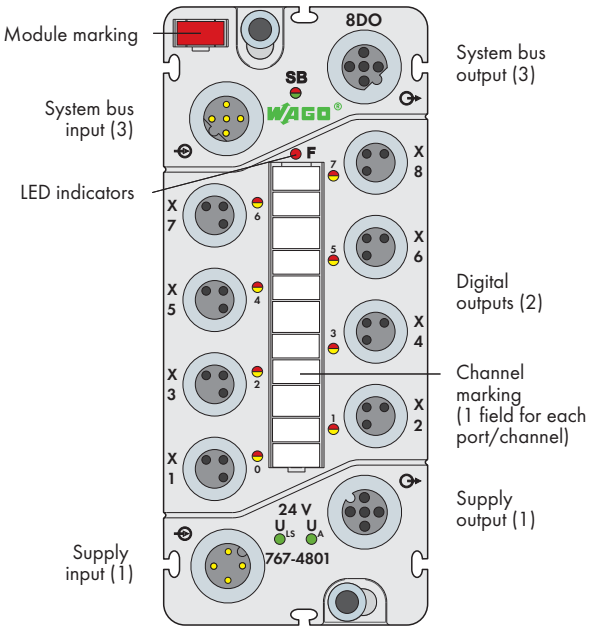

Short description:
Digital output module for actuator control (e.g., magnetic valves, DC contactors, indicators).

Features:
- 8 digital outputs, 24 VDC / 0.5 A
- Diagnostic capable (per channel)
- Parametrizable (inversion, substitute value strategy, manual mode, online simulation and diagnostics)

Included:
- 1 x WMB marker, red
- 1 x marking strip
- 2 x M8 protective cap

Description	Item No.	Pack. Unit
8DO 24V DC 0.5A (8xM8)	**767-4801**	1
8DO 24V DC 0.5A IF (8xM8)*	**767-4801/000-800**	1
* Interference-free for safety function applications (see manual)		

Accessories	Item No.
Marking strips, marking pen, spacer module and protective caps	see pages 520 ... 521
IP67 cables and connectors	see pages 502 ... 517 + Section 11

Technical Data	
Module supply:	
Connection type (1)	M12 connectors, A coded, 4 poles;
	Derating must be observed
Current carrying capacity of supply	
connections	Max. 8 A (U_{LS}: 4 A, U_A: 4 A)
Supply voltage	
Logic and sensor voltage U_{LS}	24 V DC (-25 % ... +30 %)
Actuator voltage U_A	24 V DC (-25 % ... +30 %)
Supply current	
Logic and sensor current I_{LS}	typ. 45 mA (only logic part)
Actuator current I_A	typ. 25 mA + actuators
Protection	Reverse voltage protection for U_{LS} + U_A
Digital outputs:	
No. of outputs	8
Connection type (2)	M8 connectors, 3 poles
Wire connection	2- or 3-wire
Output voltage	≤ U_A
Output current (per channel)	0.5 A (max. 0.6 A),
	short-circuit/overload proof
	(thermal disconnection)
Voltage drop against U_A at 500 mA	Max. 0.2 V DC
Output current (module)	max. 4 A
Leakage current in OFF state	typ. 150 µA
Output circuit	High-side switching

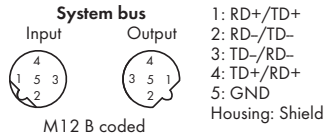

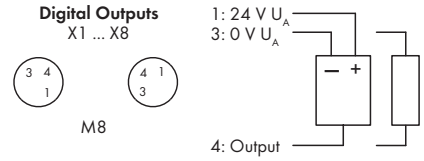

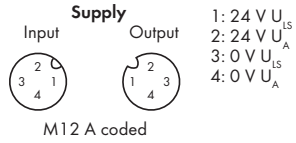

Block diagram of an output

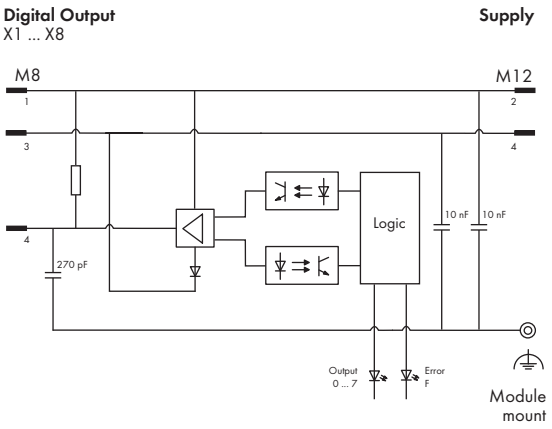

Technical Data

Information on actuator selection:	
Delay time hardware from "0" to "1"	
(0 – 90%)	Typ. 75 µs (resistive load)
Delay time hardware from "1" to "0"	
(0 – 90%)	Typ. 270 µs (resistive load)
Rise time from "0" to "1"	typ. 40 µs (resistive load)
Fall time from "1" to "0"	Typ. 50 µs (resistive load)
Cable length, unshielded	≤ 30 m
Protection against reverse voltages	≤ 0.5 A
Type of load	Inductive, resistive loads and lamps
Switching frequency	Inductive load approx. 20 Hz
	Resistive load approx. 500 Hz
	Lamp load approx. 500 Hz
Parallel connection of 2 outputs	for power boost
	for redundant actuation of a load
Type of protective circuit	External protection (e.g., recovery diodes)
Output resistance	< 0.4 Ω
Operating state influence on output:	
PLC CPU stop	Acc. to substitute value strategy
Fieldbus disruption	Acc. to substitute value strategy
S-bus (system bus) disruption	0 V status
Supply voltage under rated voltage	
tolerance	0 V status
Interruption of supply voltage	0 V status
Output operation	Non-latching
Overload behavior	Automatic restart
System bus:	
Connection type (3)	M12 connectors, B coded, 5 poles,
	shielded
Standards and approvals:	
Conformity marking	CE
Korea Certification	
UL 508	
BVS 15 ATEX E 098 X	II 3G Ex nA IIC T5 Gc,
	II 3D Ex tc IIIB T90°C Dc
IECEx BVS 15.0083X	Ex nA IIC T5 Gc,
	Ex tc IIIB T90°C Dc

Technical Data

Isolation:	
Channel – Channel	No
U_{LS}, U_A, system bus	500 V DC each
Configurable functions:	
Inversion (per channel)	On/off
Substitute value strategy (per channel)	Switch substitute value/hold last value
Substitute value (per channel)	0/1
Manual mode (per channel)	On/off
Manual mode value (per channel)	0/1
Online simulation (per channel)	Lock/unlock; simulation value: 0/1
Online simulation (per channel/	
module)	Diagnostics
I/O diagnostics:	
I/O diagnostics (per channel)	Actuator short-circuit/overload
	Actuator wire break
	Overtemperature
I/O diagnostics (per module)	Undervoltage (U_{LS} + U_A)
Process image:	
Process data width	1-byte data + status
LED indicators:	
SB: System bus status	LED (green/red/orange)
F: Error status	LED (red)
0 ... 7: Output signal status	LED (yellow/red)
U_{LS} + U_A: Supply status	LED (green)
Indicators	Non-latching

General Specifications

Dimensions (mm) W x H x L	50 x 35.7 x 117
Weight	270 g

Digital Output Module 24 V DC / 0.5 A

8 outputs (4 x M12, two outputs per connector)

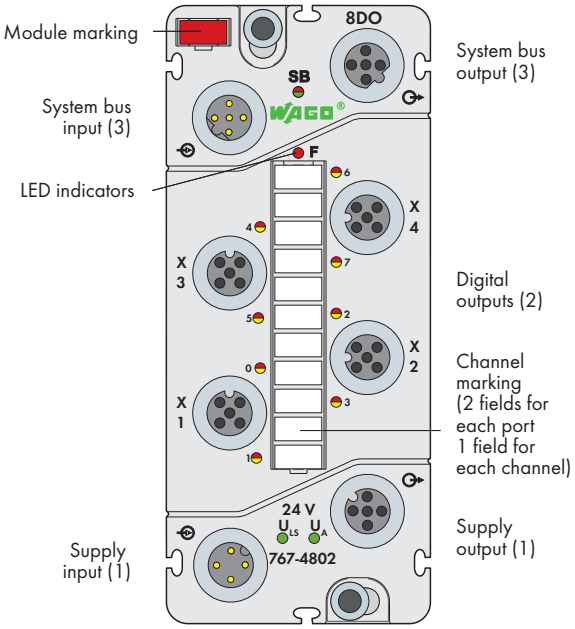

Short description:
Digital output module for actuator control (e.g., magnetic valves, DC contactors, indicators).

Features:
- 8 digital outputs, 24 VDC / 0.5 A
- Diagnostic capable (per channel)
- Parametrizable (inversion, substitute value strategy, manual mode, online simulation and diagnostics)

Included:
- 1 x WMB marker, red
- 1 x marking strip
- 2 x M12 protective cap

Description	Item No.	Pack. Unit
8DO 24V DC 0.5A (4xM12)	**767-4802**	1
8DO 24V DC 0.5A IF (4xM12)*	**767-4802/000-800**	1
* Interference-free for safety function applications (see manual)		

Accessories	Item No.
Marking strips, marking pen, spacer module and protective caps	see pages 520 ... 521
IP67 cables and connectors	see pages 502 ... 517 + Section 11

Technical Data	
Module supply:	
Connection type (1)	M12 connectors, A coded, 4 poles;
	Derating must be observed
Current carrying capacity of supply	
connections	Max. 8 A (U_{LS}: 4 A, U_A: 4 A)
Supply voltage	
Logic and sensor voltage U_{LS}	24 V DC (-25 % ... +30 %)
Actuator voltage U_A	24 V DC (-25 % ... +30 %)
Supply current	
Logic and sensor current I_{LS}	typ. 45 mA (only logic part)
Actuator current I_A	typ. 25 mA + actuators
Protection	Reverse voltage protection for U_{LS} + U_A
Digital outputs:	
No. of outputs	8
Connection type (2)	M12 connectors, A coded, 4 poles
Wire connection	2- or 3-wire
Output voltage	≤ U_A
Output current (per channel)	0.5 A (max. 0.6 A),
	short-circuit/overload proof
	(thermal disconnection)
Voltage drop against U_A at 500 mA	Max. 0.2 V DC
Output current (module)	max. 4 A
Leakage current in OFF state	typ. 150 µA
Output circuit	High-side switching

System bus

Input Output

M12 B coded

1: RD+/TD+
2: RD–/TD–
3: TD–/RD–
4: TD+/RD+
5: GND
Housing: Shield

Digital Outputs X1 ... X4
(two outputs/connector)

M12 A coded

1: 24 V U_A
3: 0 V U_A

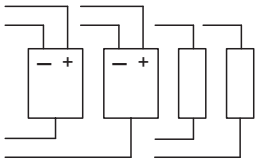

4: Output A
2: Output B

Supply

Input Output

M12 A coded

1: 24 V U_{LS}
2: 24 V U_A
3: 0 V U_{LS}
4: 0 V U_A

Block diagram of an output

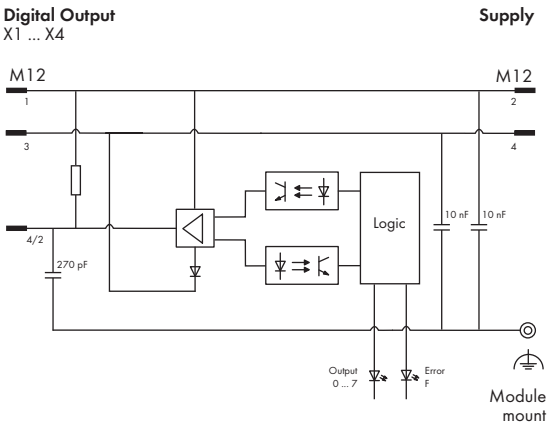

Technical Data

Information on actuator selection:	
Delay time hardware from "0" to "1"	
(0 – 90%)	Typ. 75 µs (resistive load)
Delay time hardware from "1" to "0"	
(0 – 90%)	Typ. 270 µs (resistive load)
Rise time from "0" to "1"	Typ. 40 µs (resistive load)
Fall time from "1" to "0"	Typ. 50 µs (resistive load)
Cable length, unshielded	≤ 30 m
Protection against reverse voltages	≤ 0.5 A
Type of load	Inductive, resistive loads and lamps
Switching frequency	Inductive load approx. 20 Hz
	Resistive load approx. 500 Hz
	Lamp load approx. 500 Hz
Parallel connection of 2 outputs	for power boost
	for redundant actuation of a load
Type of protective circuit	External protection (e.g., recovery diodes)
Output resistance	< 0.4 Ω
Operating state influence on output:	
PLC CPU stop	Acc. to substitute value strategy
Fieldbus disruption	Acc. to substitute value strategy
S-bus (system bus) disruption	0 V status
Supply voltage under rated voltage	
tolerance	0 V status
Interruption of supply voltage	0 V status
Output operation	Non-latching
Overload behavior	Automatic restart
System bus:	
Connection type (3)	M12 connectors, B coded, 5 poles,
	shielded
Standards and approvals:	
Conformity marking	CE
Korea Certification	
UL 508	
BVS 15 ATEX E 098 X	II 3G Ex nA IIC T5 Gc,
	II 3D Ex tc IIIB T90°C Dc
IECEx BVS 15.0083X	Ex nA IIC T5 Gc,
	Ex tc IIIB T90°C Dc

Technical Data

Isolation:	
Channel – Channel	No
U_{LS}, U_A, system bus	500 V DC each
Configurable functions:	
Inversion (per channel)	On/off
Substitute value strategy (per channel)	Switch substitute value/hold last value
Substitute value (per channel)	0/1
Manual mode (per channel)	On/off
Manual mode value (per channel)	0/1
Online simulation (per channel)	Lock/unlock; simulation value: 0/1
Online simulation (per channel/	
module)	Diagnostics
I/O diagnostics:	
I/O diagnostics (per channel)	Actuator short-circuit/overload
	Actuator wire break
	Overtemperature
I/O diagnostics (per module)	Undervoltage (U_{LS} + U_A)
Process image:	
Process data width	1-byte data + status
LED indicators:	
SB: System bus status	LED (green/red/orange)
F: Error status	LED (red)
0 ... 7: Output signal status	LED (yellow/red)
U_{LS} + U_A: Supply status	LED (green)
Indicators	Non-latching

General Specifications

Dimensions (mm) W x H x L	50 x 35.7 x 117
Weight	260 g

Digital Output Module 24 V DC / 2.0 A

8 outputs (8 x M8)

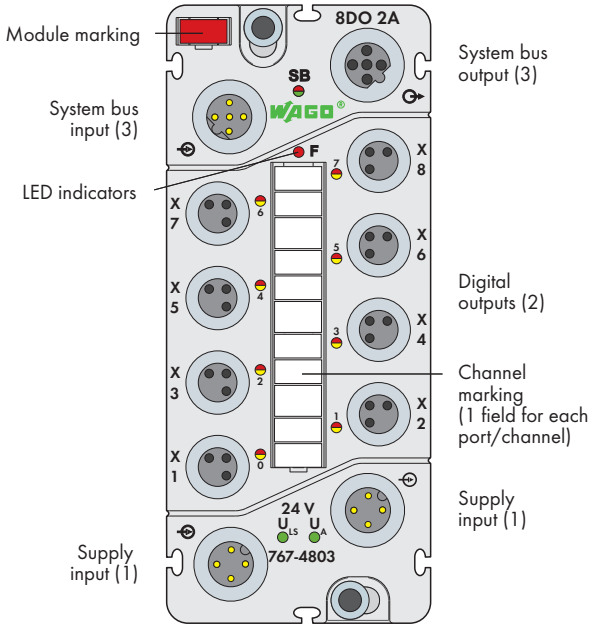

Short description:
Digital output module for actuator control (e.g., magnetic valves, DC contactors, indicators).

Features:
- 8 digital outputs, 24 VDC / 2.0 A
- Diagnostic capable (per channel)
- Parametrizable (inversion, substitute value strategy, manual mode, online simulation and diagnostics)

Included:
- 1 x WMB marker, red
- 1 x marking strip
- 2 x M8 protective cap

Note:
Due to high output current, the module is equipped with two M12 supply inputs. This is why power cannot be supplied to the next module.

Description	Item No.	Pack. Unit
8DO 24V DC 2.0A (8xM8)	**767-4803**	1
8DO 24V DC 2.0A IF (8xM8)*	**767-4803/000-800**	1
* Interference-free for safety function applications (see manual)		

Accessories	Item No.
Marking strips, marking pen, spacer module and protective caps	see pages 520 ... 521
IP67 cables and connectors	see pages 502 ... 517 + Section 11

Technical Data	
Module supply:	
Connection type (1)	M12 connectors, A coded, 4 poles;
	Derating must be observed
Current carrying capacity of supply	
connections	Max. 8 A (U_{LS}: 4 A, U_A: 4 A)
Supply voltage	
Logic and sensor voltage U_{LS}	24 V DC (-25 % ... +30 %)
Actuator voltage U_A	24 V DC (-25 % ... +30 %)
Supply current	
Logic and sensor current I_{LS}	typ. 45 mA (only logic part)
Actuator current I_A	typ. 55 mA + actuators
Protection	Reverse voltage protection for U_{LS} + U_A
Digital outputs:	
No. of outputs	8
Connection type (2)	M8 connectors, 3 poles
Wire connection	2- or 3-wire
Output voltage	≤ U_A
Output current (per channel)	2.0 A (max. 2.4 A),
	short-circuit/overload proof
	(thermal disconnection)
Voltage drop against U_A at 2.0 A	Max. 0.2 V DC
Output current (module)	max. 8 A
Leakage current in OFF state	typ. 780 µA
Output circuit	High-side switching

System bus

M12 B coded

1: RD+/TD+
2: RD–/TD–
3: TD–/RD–
4: TD+/RD+
5: GND
Housing: Shield

Digital Outputs
X1 ... X8

M8

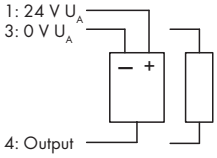

Supply

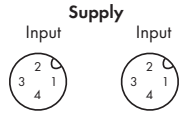

M12 A coded

1: 24 V U_{LS}
2: 24 V U_A
3: 0 V U_{LS}
4: 0 V U_A

Block diagram of an output

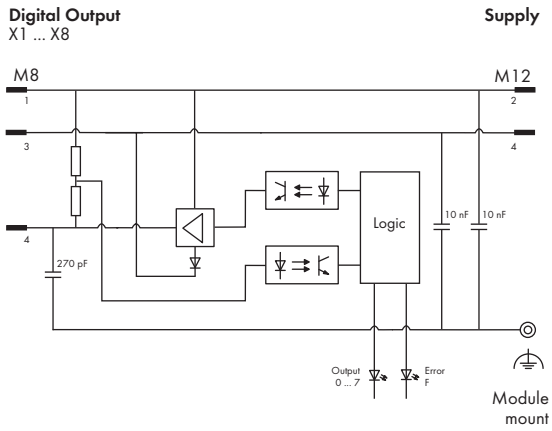

Technical Data

Information on actuator selection:	
Delay time hardware from "0" to "1"	
(0 – 90%)	Typ. 75 µs (resistive load)
Delay time hardware from "1" to "0"	
(0 – 90%)	Typ. 265 µs (resistive load)
Rise time from "0" to "1"	Typ. 30 µs (resistive load)
Fall time from "1" to "0"	Typ. 50 µs (resistive load)
Cable length, unshielded	≤ 30 m
Protection against reverse voltages	≤ 2 A
Type of load	Inductive, resistive loads and lamps
Switching frequency	Inductive load approx. 20 Hz
	Resistive load approx. 500 Hz
	Lamp load approx. 500 Hz
Parallel connection of 2 outputs	for power boost
	for redundant actuation of a load
Type of protective circuit	External protection (e.g., recovery diodes)
	required
Output resistance	max. 0.1 Ω
Operating state influence on output:	
PLC CPU stop	Acc. to substitute value strategy
Fieldbus disruption	Acc. to substitute value strategy
S-bus (system bus) disruption	0 V status
Supply voltage under rated voltage	
tolerance	0 V status
Interruption of supply voltage	0 V status
Output operation	Non-latching
Overload behavior	Automatic restart
System bus:	
Connection type (3)	M12 connectors, B coded, 5 poles,
	shielded
Standards and approvals:	
Conformity marking	CE
Korea Certification	
UL 508	
BVS 15 ATEX E 098 X	II 3G Ex nA IIC T5 Gc,
	II 3D Ex tc IIIB T90°C Dc
IECEx BVS 15.0083X	Ex nA IIC T5 Gc,
	Ex tc IIIB T90°C Dc

Technical Data

Isolation:	
Channel – Channel	No
U_{LS}, U_A, system bus	500 V DC each
Configurable functions:	
Inversion (per channel)	On/off
Substitute value strategy (per channel)	Switch substitute value/hold last value
Substitute value (per channel)	0/1
Manual mode (per channel)	On/off
Manual mode value (per channel)	0/1
Online simulation (per channel)	Lock/unlock; simulation value: 0/1
Online simulation (per channel/	
module)	Diagnostics
I/O diagnostics:	
I/O diagnostics (per channel)	Actuator short-circuit/overload
	Actuator wire break
	Overtemperature
I/O diagnostics (per module)	Undervoltage (U_{LS} + U_A)
Process image:	
Process data width	1-byte data + status
LED indicators:	
SB: System bus status	LED (green/red/orange)
F: Error status	LED (red)
0 ... 7: Output signal status	LED (yellow/red)
U_{LS} + U_A: Supply status	LED (green)
Indicators	Non-latching

General Specifications

Dimensions (mm) W x H x L	50 x 35.7 x 117
Weight	277 g

Digital Output Module 24 V DC / 2.0 A

8 outputs (4 x M12, two outputs per connector)

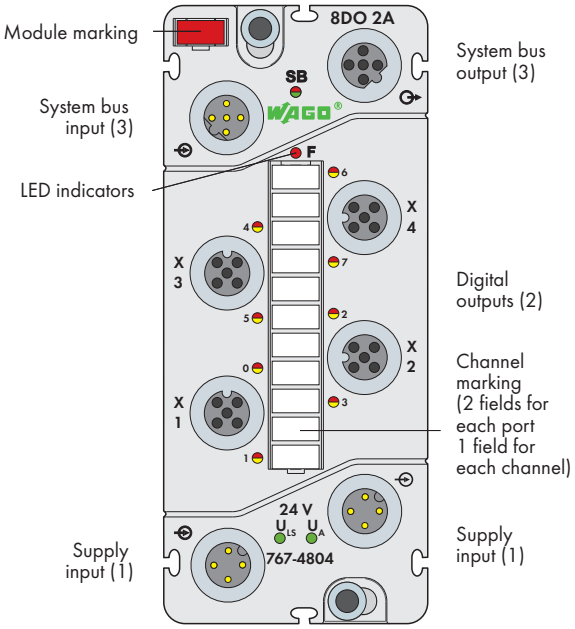

Short description:
Digital output module for actuator control (e.g., magnetic valves, DC contactors, indicators).

Characteristics:
- 8 digital outputs DC 24 V / 2.0 A
- Diagnostic capable (per channel)
- Parametrizable (inversion, substitute value strategy, manual mode, online simulation and diagnostics)

Included:
- Module WMB marker card, red (1 pcs)
- Marker strips (1 pcs)
- M8 protective caps (2 pcs)

Description	Item No.	Pack. Unit
8DO 24V DC 2.0A (4xM12)	**767-4804**	1
8DO 24V DC 2.0A IF (4xM12)*	**767-4804/000-800**	1
* Interference-free for safety function applications (see manual)		

Accessories	Item No.
Marking strips, marking pen, spacer module and protective caps	see pages 520 ... 521
IP67 cables and connectors	see pages 502 ... 517 + Section 11

Technical Data	
Module supply:	
Connection type (1)	M12 connectors, A coded, 4 poles;
	Derating must be observed
Current carrying capacity of supply	
connections	Max. 8 A (U_{LS}: 4 A, U_A: 4 A)
Supply voltage	
Logic and sensor voltage U_{LS}	24 V DC (-25 % ... +30 %)
Actuator voltage U_A	24 V DC (-25 % ... +30 %)
Supply current	
Logic and sensor current I_{LS}	typ. 45 mA (only logic part)
Actuator current I_A	typ. 55 mA + actuators
Protection	Reverse voltage protection for U_{LS} + U_A
Digital outputs:	
No. of outputs	8
Connection type (2)	M12 connectors, A coded, 4 poles
Wire connection	2- or 3-wire
Output voltage	≤ U_A
Output current (per channel)	2.0 A (max. 2.4 A),
	short-circuit/overload proof
	(thermal disconnection)
Voltage drop against U_A at 2.0 A	Max. 0.2 V DC
Output current (module)	max. 8 A
Leakage current in OFF state	typ. 780 µA
Output circuit	High-side switching

System bus

Input Output

M12 B coded

1: RD+/TD+
2: RD–/TD–
3: TD–/RD–
4: TD+/RD+
5: GND
Housing: Shield

Digital Outputs X1 ... X4
(two outputs/connector)

M12 A coded

1: 24 V U_A
3: 0 V U_A

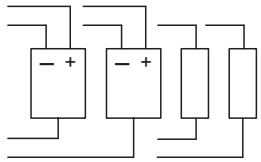

4: Output A
2: Output B

Supply

Input Output

M12 A coded

1: 24 V U_{LS}
2: 24 V U_A
3: 0 V U_{LS}
4: 0 V U_A

Block diagram of an output

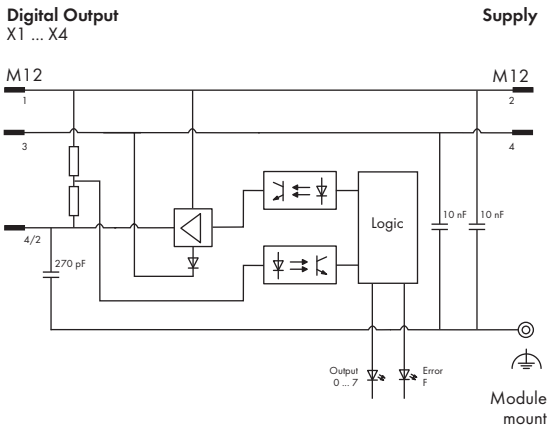

Technical Data

Information on actuator selection:	
Delay time hardware from "0" to "1"	
(0 – 90%)	Typ. 75 µs (resistive load)
Delay time hardware from "1" to "0"	
(0 – 90%)	Typ. 265 µs (resistive load)
Rise time from "0" to "1"	Typ. 30 µs (resistive load)
Fall time from "1" to "0"	Typ. 50 µs (resistive load)
Cable length, unshielded	≤ 30 m
Protection against reverse voltages	≤ 2 A
Type of load	Inductive, resistive loads and lamps
Switching frequency	Inductive load approx. 20 Hz
	Resistive load approx. 500 Hz
	Lamp load approx. 500 Hz
Parallel connection of 2 outputs	for power boost
	for redundant actuation of a load
Type of protective circuit	External protection (e.g., recovery diodes)
	required
Output resistance	max. 0.1 Ω
Operating state influence on output:	
PLC CPU stop	Acc. to substitute value strategy
Fieldbus disruption	Acc. to substitute value strategy
S-bus (system bus) disruption	0 V status
Supply voltage under rated voltage	
tolerance	0 V status
Interruption of supply voltage	0 V status
Output operation	Non-latching
Overload behavior	Automatic restart
System bus:	
Connection type (3)	M12 connectors, B coded, 5 poles,
	shielded
Standards and approvals:	
Conformity marking	CE
Korea Certification	
UL 508	
BVS 15 ATEX E 098 X	II 3G Ex nA IIC T5 Gc,
	II 3D Ex tc IIIB T90°C Dc
IECEx BVS 15.0083X	Ex nA IIC T5 Gc,
	Ex tc IIIB T90°C Dc

Technical Data

Isolation:	
Channel – Channel	No
U_{LS}, U_A, system bus	500 V DC each
Configurable functions:	
Inversion (per channel)	On/off
Substitute value strategy (per channel)	Switch substitute value/hold last value
Substitute value (per channel)	0/1
Manual mode (per channel)	On/off
Manual mode value (per channel)	0/1
Online simulation (per channel)	Lock/unlock; simulation value: 0/1
Online simulation (per channel/	
module)	Diagnostics
I/O diagnostics:	
I/O diagnostics (per channel)	Actuator short-circuit/overload
	Actuator wire break
	Overtemperature
I/O diagnostics (per module)	Undervoltage (U_{LS} + U_A)
Process image:	
Process data width	1-byte data + status
LED indicators:	
SB: System bus status	LED (green/red/orange)
F: Error status	LED (red)
0 ... 7: Output signal status	LED (yellow/red)
U_{LS} + U_A: Supply status	LED (green)
Indicators	Non-latching

General Specifications

Dimensions (mm) W x H x L	50 x 35.7 x 117
Weight	250 g

Digital Output Module 24 V DC / 0.5 A

8 ouputs (8 x M8), low-side switching

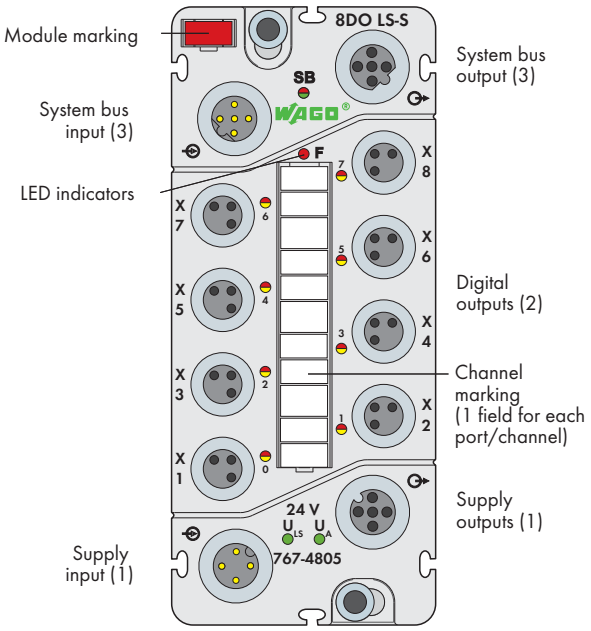

Short description:
Digital output module for actuator control (e.g., magnetic valves, DC contactors, indicators).

Features:
- 8 digital outputs, 24 V DC / 0.5 A, low-side switching
- Diagnostic capable (per channel)
- Parametrizable (inversion, substitute value strategy, manual mode, online simulation and diagnostics)

Included:
- 1 x WMB marker, red
- 1 x marking strip
- 2 x M8 protective cap

Description	Item No.	Pack. Unit
8DO 24V DC 0.5A LS SWITCH (8xM8)	**767-4805**	1

Accessories	Item No.
Marking strips, marking pen, spacer module and protective caps	see pages 520 ... 521
IP67 cables and connectors	see pages 502 ... 517 + Section 11

Technical Data	
Module supply:	
Connection type (1)	M12 connectors, A coded, 4 poles;
	Derating must be observed
Current carrying capacity of supply	
connections	Max. 8 A (U_{LS}: 4 A, U_A: 4 A)
Supply voltage	
Logic and sensor voltage U_{LS}	24 V DC (-25 % ... +30 %)
Actuator voltage U_A	24 V DC (-25 % ... +30 %)
Supply current	
Logic and sensor current I_{LS}	Typ. 40 mA (only logic part)
Actuator current I_A	Typ. 20 mA + actuators
Protection	Reverse voltage protection for U_{LS} + U_A
Digital outputs:	
No. of outputs	8
Connection type (2)	M8 connectors, 3 poles
Wire connection	2- or 3-wire
Output voltage	≥ 0V U_A
Output current (per channel)	0.5 A (max. 0.6 A),
	short-circuit/overload protection
	(thermal shutdown)
Voltage drop against U_A at 500 mA	Max. 0.2 V DC (0 V U_A)
Output current (module)	max. 4 A
Leakage current in OFF state	typ. 150 µA
Output circuit	Low-side switching

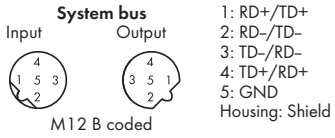

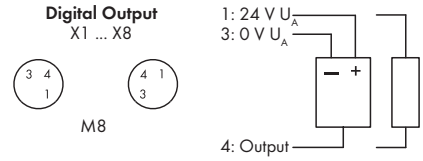

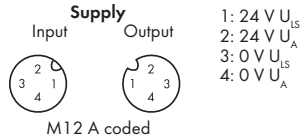

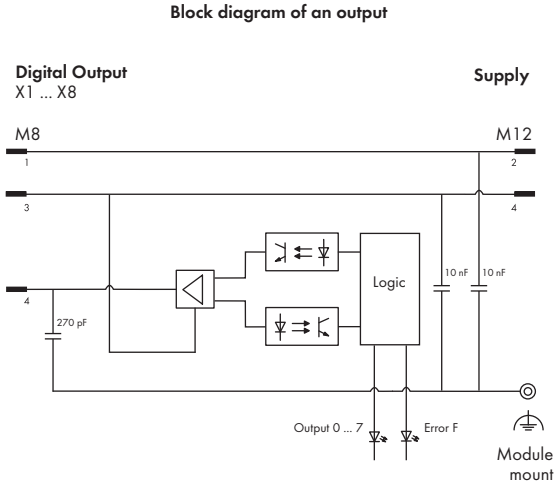

Technical Data

Information on actuator selection:	
Delay time hardware from "0" to "1"	
(0 – 90%)	Typ. 75 µs (resistive load)
Delay time hardware from "1" to "0"	
(0 – 90%)	Typ. 270 µs (resistive load)
Rise time from "0" to "1"	Typ. 150 µs (resistive load)
Fall time from "1" to "0"	Typ. 150 µs (resistive load)
Cable length, unshielded	≤ 30 m
Protection against reverse voltages	≤ 0.5 A
Type of load	Inductive, resistive loads and lamps
Switching frequency	Inductive load approx. 20 Hz
	Resistive load approx. 500 Hz
	Lamp load approx. 500 Hz
Parallel connection of 2 outputs	For power boost
	For redundant load actuation
Type of protective circuit	External protection (e.g., recovery diodes)
Output resistance	< 0.4 Ω
Operating state influence on output:	
PLC CPU stop	Acc. to substitute value strategy
Fieldbus disruption	Acc. to substitute value strategy
S-bus (system bus) disruption	0 V status
Supply voltage under rated voltage	
tolerance	0 V status
Interruption of supply voltage	0 V status
Output operation	Non-latching
Overload behavior	Automatic restart
System bus:	
Connection type (3)	M12 connectors, B coded, 5 poles,
	shielded
Standards and approvals:	
Conformity marking	CE
Korea Certification	
UL 508	
BVS 15 ATEX E 098 X	II 3G Ex nA IIC T5 Gc,
	II 3D Ex tc IIIB T90°C Dc
IECEx BVS 15.0083X	Ex nA IIC T5 Gc,
	Ex tc IIIB T90°C Dc

Technical Data

Isolation:	
Channel – Channel	No
U_{LS}, U_A, system bus	500 V DC each
Configurable functions:	
Inversion (per channel)	On/off
Substitute value strategy (per channel)	Switch substitute value / hold last value
Substitute value (per channel)	0/1
Manual mode (per channel)	On/off
Manual mode value (per channel)	0/1
Online simulation (per channel)	Lock/unlock; simulation value: 0/1
Online simulation (per channel/	
module)	Diagnostics
I/O diagnostics:	
I/O diagnostics (per channel)	Overtemperature
I/O diagnostics (per module)	Undervoltage (U_{LS} + U_A)
Process image:	
Process data width	1-byte data + status
LED indicators:	
SB: System bus status	LED (green/red/orange)
F: Error status	LED (red)
0 ... 7: Output signal status	LED (yellow/red)
U_{LS} + U_A: Supply status	LED (green)
Indicators	Non-latching

General Specifications

Dimensions (mm) W x H x L	50 x 35.7 x 117
Weight	270 g

Digital Output Module 24 V DC / 0.5 A

8 outputs (4 x M12, two inputs per connector), low-side switching

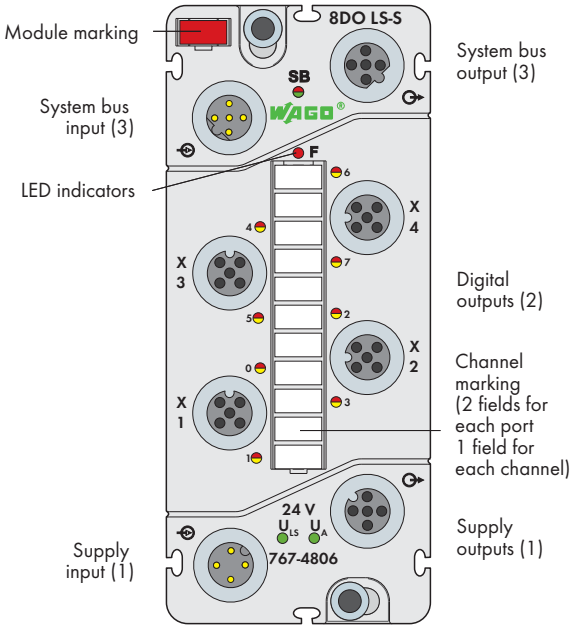

Short description:
Digital output module for actuator control (e.g., magnetic valves, DC contactors, indicators).

Features:
- 8 digital outputs, 24 V DC / 0.5 A, low-side switching
- Diagnostic capable (per channel)
- Parametrizable (inversion, substitute value strategy, manual mode, online simulation and diagnostics)

Included:
- 1 x WMB marker, red
- 1 x marking strip
- 2 x M12 protective cap

Description	Item No.	Pack. Unit
8DO 24V DC 0.5A LS SWITCH (4xM12)	**767-4806**	1

Accessories	Item No.
Marking strips, marking pen, spacer module and protective caps	see pages 520 ... 521
IP67 cables and connectors	see pages 502 ... 517 + Section 11

Technical Data	
Module supply:	
Connection type (1)	M12 connectors, A coded, 4 poles;
	Derating must be observed
Current carrying capacity of supply	
connections	Max. 8 A (U_{LS}: 4 A, U_A: 4 A)
Supply voltage	
Logic and sensor voltage U_{LS}	24 V DC (-25 % ... +30 %)
Actuator voltage U_A	24 V DC (-25 % ... +30 %)
Supply current	
Logic and sensor current I_{LS}	Typ. 40 mA (only logic part)
Actuator current I_A	Typ. 20 mA + actuators
Protection	Reverse voltage protection for U_{LS} + U_A
Digital outputs:	
No. of outputs	8
Connection type (2)	M12 connectors, A coded, 4 poles
Wire connection	2- or 3-wire
Output voltage	≥ 0V U_A
Output current (per channel)	0.5 A (max. 0.6 A),
	short-circuit/overload protection
	(thermal shutdown)
Voltage drop against U_A at 500 mA	Max. 0.2 V DC (0 V U_A)
Output current (module)	max. 4 A
Leakage current in OFF state	typ. 150 µA
Output circuit	Low-side switching

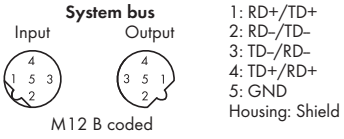

1: RD+/TD+
2: RD–/TD–
3: TD–/RD–
4: TD+/RD+
5: GND
Housing: Shield

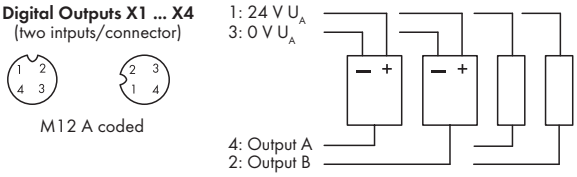

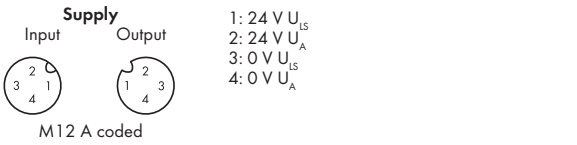

Block diagram of an output

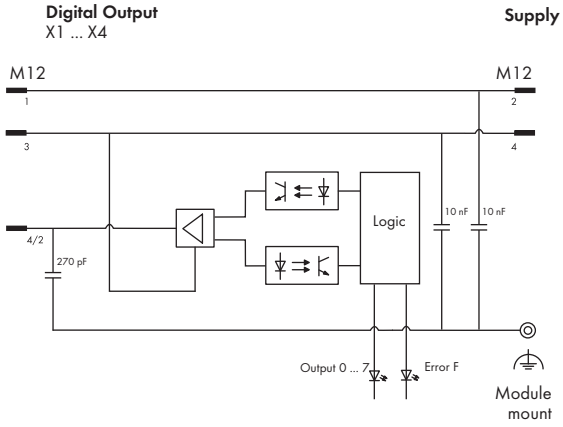

Technical Data

Information on actuator selection:	
Delay time hardware from "0" to "1"	
(0 – 90%)	Typ. 75 µs (resistive load)
Delay time hardware from "1" to "0"	
(0 – 90%)	Typ. 270 µs (resistive load)
Rise time from "0" to "1"	Typ. 150 µs (resistive load)
Fall time from "1" to "0"	Typ. 150 µs (resistive load)
Cable length, unshielded	≤ 30 m
Protection against reverse voltages	≤ 0.5 A
Type of load	Inductive, resistive loads and lamps
Switching frequency	Inductive load approx. 20 Hz
	Resistive load approx. 500 Hz
	Lamp load approx. 500 Hz
Parallel connection of 2 outputs	For power boost
	For redundant load actuation
Type of protective circuit	External protection (e.g., recovery diodes)
Output resistance	< 0.4 Ω
Operating state influence on output:	
PLC CPU stop	Acc. to substitute value strategy
Fieldbus disruption	Acc. to substitute value strategy
S-bus (system bus) disruption	0 V status
Supply voltage under rated voltage	
tolerance	0 V status
Interruption of supply voltage	0 V status
Output operation	Non-latching
Overload behavior	Automatic restart
System bus:	
Connection type (3)	M12 connectors, B coded, 5 poles,
	shielded
Standards and approvals:	
Conformity marking	CE
Korea Certification	
UL 508	
BVS 15 ATEX E 098 X	II 3G Ex nA IIC T5 Gc,
	II 3D Ex tc IIIB T90°C Dc
IECEx BVS 15.0083X	Ex nA IIC T5 Gc,
	Ex tc IIIB T90°C Dc

Technical Data

Isolation:	
Channel – Channel	No
U_{LS}, U_A, system bus	500 V DC each
Configurable functions:	
Inversion (per channel)	On/off
Substitute value strategy (per channel)	Switch substitute value / hold last value
Substitute value (per channel)	0/1
Manual mode (per channel)	On/off
Manual mode value (per channel)	0/1
Online simulation (per channel)	Lock/unlock; simulation value: 0/1
Online simulation (per channel/	
module)	Diagnostics
I/O diagnostics:	
I/O diagnostics (per channel)	Overtemperature
I/O diagnostics (per module)	Undervoltage (U_{LS} + U_A)
Process image:	
Process data width	1-byte data + status
LED indicators:	
SB: System bus status	LED (green/red/orange)
F: Error status	LED (red)
0 ... 7: Output signal status	LED (yellow/red)
U_{LS} + U_A: Supply status	LED (green)
Indicators	Non-latching

General Specifications

Dimensions (mm) W x H x L	50 x 35.7 x 117
Weight	270 g

Digital Output Module 24 V DC / 0.5 A

8 outputs (8 x M12)

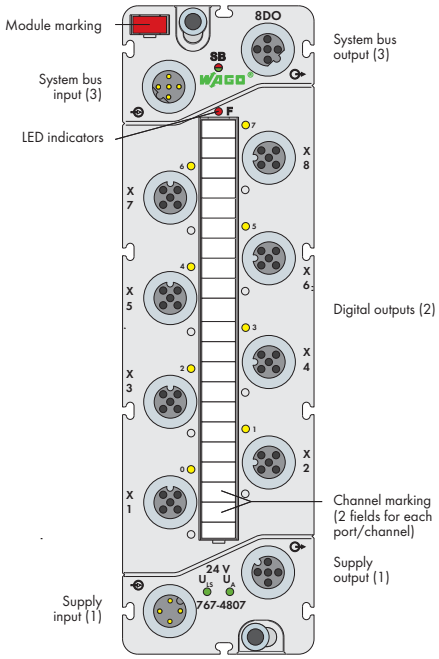

Short description:
Digital output module for actuator control (e.g., magnetic valves, DC contactors, indicators).

Included:
- 1 x WMB marker, red
- 1 x marking strip
- 2 x M12 protective cap

Features:
- 8 digital outputs, 24 VDC / 0.5 A
- Diagnostic capable (per channel)
- Parametrizable (inversion, substitute value strategy, manual mode, online simulation and diagnostics)

Description	Item No.	Pack. Unit
8DO 24V DC 0.5A (8xM12)	**767-4807**	1
8DO 24V DC 0.5A IF (8xM12)*	**767-4807/000-800**	1
* Interference-free for safety function applications (see manual)		

Accessories	Item No.
Marking strips, marking pen, spacer module and protective caps	see pages 520 ... 521
IP67 cables and connectors	see pages 502 ... 517 + Section 11

Technical Data	
Module supply:	
Connection type (1)	M12 connectors, A coded, 4 poles;
	Derating must be observed
Current carrying capacity of supply	
connections	max. 8 A (U_{LS}: 4 A, U_A: 4 A)
Supply voltage	
Logic and sensor voltage U_{LS}	24 V DC (-25 % ... +30 %)
Actuator voltage U_A	24 V DC (-25 % ...+30 %)
Supply current	
Logic and sensor current I_{LS}	typ. 45 mA (only logic part)
Actuator current I_A	typ. 25 mA + actuators
Protection	Reverse voltage protection for U_{LS} + U_A
Digital outputs:	
No. of outputs	8
Connection type (2)	M12 connectors, A coded, 4 poles
Wire connection	2- or 3-wire
Output voltage	≤ U_A
Output current (per channel)	0.5 A (max. 0.6 A),
	short-circuit/overload proof
	(thermal disconnection)
Voltage drop against U_A at 500 mA	max. 0.2 V DC
Output current (module)	max. 4 A
Leakage current in OFF state	typ. 150 µA
Output circuit	High-side switching

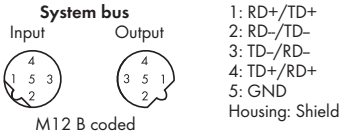

1: RD+/TD+
2: RD–/TD–
3: TD–/RD–
4: TD+/RD+
5: GND
Housing: Shield

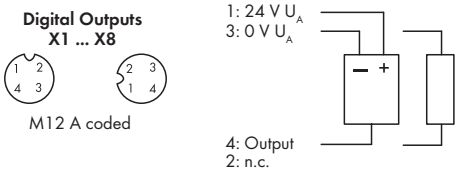

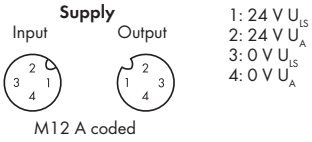

1: 24 V U_{LS}
2: 24 V U_A
3: 0 V U_{LS}
4: 0 V U_A

Block diagram of an output

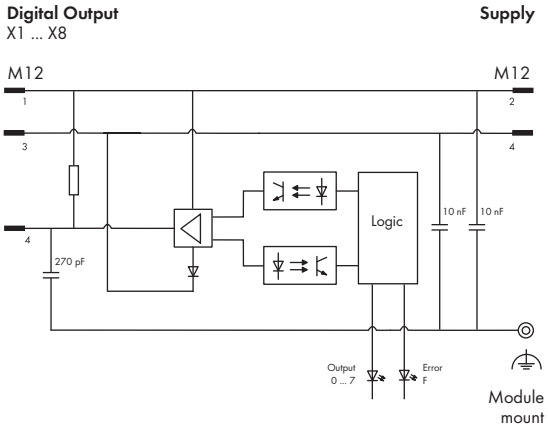

Technical Data

Information on actuator selection:	
Delay time hardware from "0" to "1"	
(0 – 90%)	typ. 65 µs (resistive load)
Delay time hardware from "1" to "0"	
(0 – 90%)	typ. 190 µs (resistive load)
Rise time from "0" to "1"	typ. 40 µs (resistive load)
Fall time from "1" to "0"	typ. 50 µs (resistive load)
Cable length, unshielded	≤ 30 m
Protection against reverse voltages	≤ 0.5 A
Type of load	Inductive, resistive loads and lamps
Switching frequency	Inductive load approx. 20 Hz
	Resistive load approx. 500 Hz
	Lamp load approx. 500 Hz
Parallel connection of 2 outputs	for power boost
	for redundant actuation of a load
Type of protective circuit	External protection (e.g., recovery diodes)
Output resistance	< 0.4 Ω
Operating state influence on output:	
PLC CPU stop	Acc. to substitute value strategy
Fieldbus disruption	Acc. to substitute value strategy
S-bus (system bus) disruption	0 V status
Supply voltage under rated voltage	
tolerance	0 V status
Interruption of supply voltage	0 V status
Output operation	Non-latching
Overload behavior	Automatic restart
System bus:	
Connection type (3)	M12 connectors, B coded, 5 poles,
	shielded
Standards and approvals:	
Conformity marking	CE
Korea Certification	
UL 508	
BVS 15 ATEX E 098 X	II 3G Ex nA IIC T5 Gc,
	II 3D Ex tc IIIB T90°C Dc
IECEx BVS 15.0083X	Ex nA IIC T5 Gc,
	Ex tc IIIB T90°C Dc

Technical Data

Isolation:	
Channel – Channel	no
U_{LS}, U_A, system bus	500 V DC each
Configurable functions:	
Inversion (per channel)	On/off
Substitute value strategy (per channel)	Switch substitute value/hold last value
Substitute value (per channel)	0/1
Manual mode (per channel)	On/off
Manual mode value (per channel)	0/1
Online simulation (per channel)	Lock/unlock; simulation value: 0/1
Online simulation (per channel/	
module)	Diagnostics
I/O diagnostics:	
I/O diagnostics (per channel)	Actuator short-circuit/overload
	Actuator wire break
	Overtemperature
I/O diagnostics (per module)	Undervoltage (U_{LS} + U_A)
Process image:	
Process data width	1-byte data + status
LED indicators:	
SB: System bus status	LED (green/red/orange)
F: Error status	LED (red)
0 ... 7: Output signal status	LED (yellow/red)
U_{LS} + U_A: Supply status	LED (green)
Indicators	Non-latching

General Specifications

Dimensions (mm) W x H x L	50 x 35.7 x 170
Weight	385 g

Digital Output Module, 24 VDC, 0.1 A, High Speed

8 outputs (4 x M12, two outputs per connector)

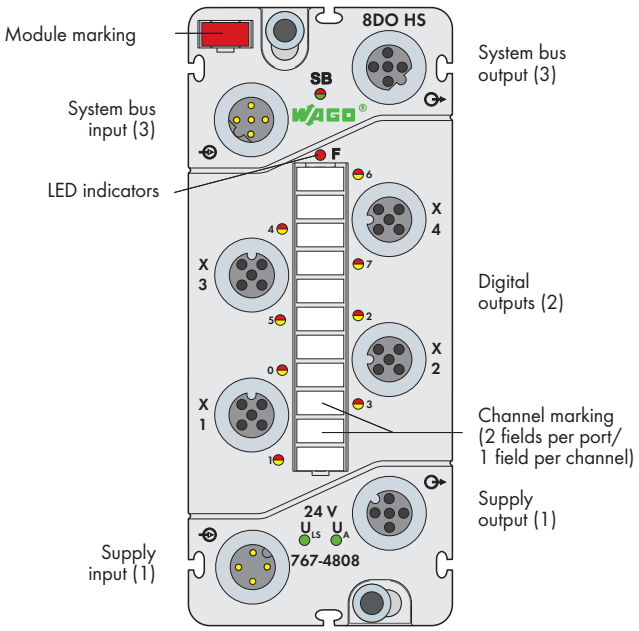

Short description:
This digital output module outputs signals from actuators with short response times. The 767-4808 Module features high-speed outputs, making it ideal for use with fast ETHERNET-based fieldbus systems (e.g., sercos).

Features:
- 8 digital outputs, 24 VDC / 0.1 A
- Front-end cycle time (hardware) max. 0,5 µs
- Diagnostic-capable (channel by channel/module by module)
- Parametrizable (inversion, substitute value strategy, substitute value, manual mode, online simulation and diagnostics)

Included:
- 1 x WMB marker, red
- 1 x marking strip
- 2 x M12 protective cap

Description	Item No.	Pack. Unit
8DO 24VDC 0,1A HS (4xM12)	**767-4808**	1

Accessories	Item No.
Marking strips, marking pen, spacer module and protective caps	see pages 520 ... 521
IP67 cables and connectors	see pages 502 ... 517 + Section 11

Technical Data	
Module supply:	
Connection type (1)	M12 connectors, A coded, 4 poles; Derating must be observed
Current carrying capacity of supply connections	Max. 8 A (U_{LS}: 4 A, U_A: 4 A)
Supply voltage	
Logic and sensor voltage U_{LS}	24 V DC (-25 % ... +30 %)
Actuator voltage U_A	24 V DC (-25 % ... +30 %)
Supply current	
Logic and sensor current I_{LS}	typ. 40 mA (logic component only)
Actuator current I_A	typ. 35 mA + actuator supply (≤ 1 A) + load
Protection	Reverse voltage protection for U_{LS} + U_A, short-circuit protection for actuator supply
Digital outputs:	
No. of outputs	8
Connection type (2)	M12 connectors, A coded, 5 poles, shielded
Wire connection	2- or 3-wire
Output voltage	≤ U_A
Output current (per channel)	0.1 A, short-circuit/overload proof (thermal disconnection)
Voltage drop against U_A at 500 mA	Max. 1.7 V DC
Output current (module)	max. 0.8 A
Leakage current in OFF state	typ. 50 µA
Output circuit	Push/Pull

System bus

Input Output

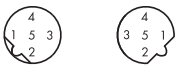

M12 B coded

1: RD+/TD+
2: RD–/TD–
3: TD–/RD–
4: TD+/RD+
5: GND
Housing: Shield

Digital Outputs X1 ... X4
(two outputs/connector)

M12 A coded

1: 24 V
3: 0 V U_A
5: Shield
4: Output A
2: Output B
Housing: Shield

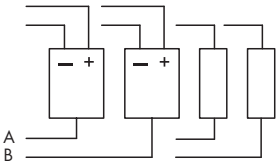

Supply

Input Output

M12 A coded

1: 24 V U_{LS}
2: 24 V U_A
3: 0 V U_{LS}
4: 0 V U_A

Block diagram of an output

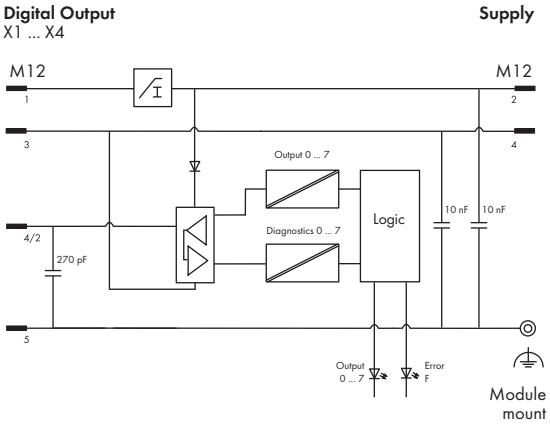

Technical Data

Information on actuator selection:	
Front-end cycle time 90% (hardware)	max. 0,5 µs
Edge steepness	$T_{ON/OFF}$: typ. < 0,2 µs
Front-end jitter/skew (output)	< 0,2 µs
Protection against reverse voltages	≤ 0.5 A
Type of load	Inductive, resistive loads and lamps
Switching frequency	Inductive load upon request
	Resistive load upon request
	Lamp load upon request
Type of protective circuit	External protection (e.g., recovery diodes)
Operating state influence on output:	
PLC CPU stop	Acc. to substitute value strategy
Fieldbus disruption	Acc. to substitute value strategy
S-bus (system bus) disruption	0 V status
Supply voltage under rated voltage	
tolerance	0 V status
Interruption of supply voltage	0 V status
Output operation	Non-latching
Overload behavior	Automatic restart
System bus:	
Connection type (3)	M12 connectors, B coded, 5 poles,
	shielded
Standards and approvals:	
Conformity marking	CE
UL 508	
BVS 15 ATEX E 098 X	II 3G Ex nA IIC T5 Gc,
	II 3D Ex tc IIIB T90°C Dc
IECEx BVS 15.0083X	Ex nA IIC T5 Gc,
	Ex tc IIIB T90°C Dc

Technical Data

Isolation:	
Channel – Channel	No
U_{LS}, U_A, system bus	500 VDC each
Configurable functions:	
Inversion (per channel)	On/off
Substitute value strategy (per channel)	Switch substitute value/hold last value
Substitute value (per channel)	0/1
Manual mode (per channel)	On/off
Manual mode value (per channel)	0/1
Online simulation (per channel)	Lock/Unlock; simulation value: 0/1;
	diagnostics
I/O diagnostics:	
I/O diagnostics (per channel)	Overtemperature, actuators
I/O diagnostics (per module)	Undervoltage (U_{LS} + U_A)
Process image:	
Process data width	1-byte data + status
LED indicators:	
SB: System bus status	LED (green/red/orange)
F: Error status	LED (red)
0 ... 7: Output signal status	LED (yellow/red)
U_{LS} + U_A: Supply status	LED (green)
Indicators	Non-latching

General Specifications

Dimensions (mm) W x H x L	50 x 35.7 x 117
Weight	270 g

Digital Input/Output Module 24 V DC / 0.5 A

8 inputs/outputs (8 x M8)

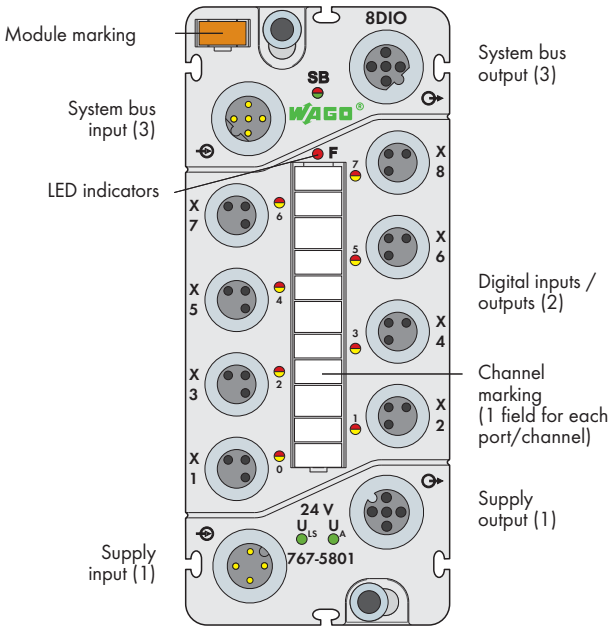

Short description:
This digital input/output module records binary signals from switches, sensors and proximity switches (BEROs)*. The module also controls actuators, such as magnetic valves, DC contactors and indicators.

* Does not apply to 767-5801/000-800

Features:
- 8 digital inputs/outputs, 24 VDC / 0.5 A
- Input/output, parametrizable (channel by channel)
- Diagnostic-capable (channel by channel/module by module)
- Parametrizable (operating mode, incl. counter, filter, inversion, substitute value strategy, substitute value, manual mode, online simulation and diagnostics)

Included:
- 1 x WMB marker, orange
- 1 x marking strip
- 2 x M8 protective cap

Description	Item No.	Pack. Unit
8DIO 24V DC 0.5A (8xM8)	**767-5801**	1
8DIO 24V DC 0.5A IF (8xM8)**	**767-5801/000-800**	1
** Interference-free for safety function applications (see manual)		

Accessories	Item No.
Marking strips, marking pen, spacer module and protective caps	see pages 520 ... 521
IP67 cables and connectors	see pages 502 ... 517 + Section 11

Technical Data	
Module supply:	
Connection type (1)	M12 connectors, A coded, 4 poles;
	Derating must be observed
Current carrying capacity of supply	
connections	max. 8 A (U_{LS}: 4 A, U_A: 4 A)
Supply voltage	
Logic and sensor voltage U_{LS}	24 V DC (-25 % ... +30 %)
Actuator voltage U_A	24 V DC (-25 % ...+30 %)
Supply current	
Logic and sensor current I_{LS}	typ. 45 mA (only logic part)
Actuator current I_A	typ. 75 mA + sensors/actuators
	(max. 800 mA) + load
Protection	Reverse voltage protection for U_{LS} + U_A
	Short-circuit protection for sensor/actuator
	supply
Digital inputs:	
Number of inputs	8
Connection type (2)	M8 connectors, 3 poles
Wire connection	2- or 3-wire

Technical Data	
Digital inputs:	
Input filter	Hardware: ≤ 110 µs
	Software: parametrizable
Input characteristic	Type 2, acc. to IEC 61131-2 (767-5801)
	Type 1, acc. to IEC 61131-2
	(767-5801/000-800)
Signal voltage (0)	-3 V ... +5 V DC
Signal voltage (1)	+11 ... +30 V DC (767-5801)
	+15 V ... +30 V DC (767-5801/000-800)
Input wiring	High-side switching
Input voltage	24 VDC (-3 VDC < U_{IN} < +30 VDC);
	Power from U_A is strongly recommended,
	recovery for voltages > U_A
Input current (typ.)	7.0 mA (767-5801)
	3.0 mA (767-5801/000-800)
Connection of 2-wire BEROs	max. 1.5 mA admissible closed current
Cable length, unshielded	≤ 30 m
Input characteristic:	
Input voltage	Typical input current
0 V DC	0
5 V	2.7 mA (767-5801)
	0.6 mA (767-5801/000-800)
11 V	6.8 mA (767-5801)
15 V	2.6 mA (767-5801/000-800)
24 V	7.0 mA (767-5801)
	3.0 mA (767-5801/000-800)
30 V	7.1 mA (767-5801)
	3.2 mA (767-5801/000-800)
Digital outputs:	
No. of outputs	8
Connection type (2)	M8 connectors, 3 poles
Wire connection	2- or 3-wire

System bus

M12, B coded

1: RD+/TD+
2: RD–/TD–
3: TD–/RD–
4: TD+/RD+
5: GND
Housing: Shield

Digital Inputs/Outputs X1 ... X8

M8

1: 24 V
3: 0 V U_A

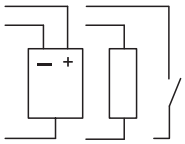

4: In-/Output

Supply

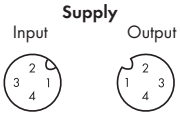

M12, A coded

1: 24 V U_{LS}
2: 24 V U_A
3: 0 V U_{LS}
4: 0 V U_A

Block diagram of an input/output

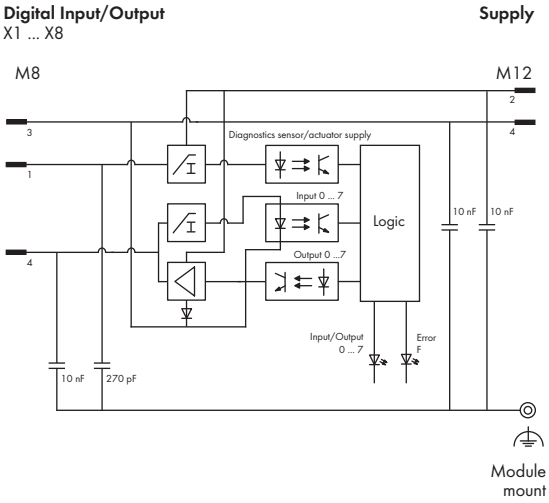

Technical Data

Digital outputs:	
Output voltage	≤ U_A
Output current (per channel)	0.5 A (max. 0.6 A),
	short-circuit/overload proof
	(thermal disconnection)
Voltage drop against U_A at 500 mA	max. 0.2 V DC
Output current (module)	max. 4 A
Leakage current in OFF state	typ. 5 µA
Output circuit	High-side switching
Information on actuator selection:	
Delay time hardware from "0" to "1"	
(0 – 90%)	typ. 90 µs (resistive load)
Delay time hardware from "1" to "0"	
(0 – 90%)	typ. 310 µs (resistive load)
Rise time from "0" to "1"	typ. 60 µs (resistive load)
Fall time from "1" to "0"	typ. 45 µs (resistive load)
Cable length, unshielded	≤ 30 m
Reverse current (in case of recovery for	
voltages > U_A)	≤ 0,5 A (error: 1 channel)
Type of load	Inductive, resistive loads and lamps
Switching frequency	Inductive load approx. 20 Hz
	Resistive load approx. 500 Hz
	Lamp load approx. 500 Hz
Parallel connection of 2 outputs	for power boost
	for redundant actuation of a load
Type of protective circuit	External protection (e.g., recovery diodes)
Output resistance	< 0.4 Ω
Operating state influence on output:	
PLC CPU stop	Acc. to substitute value strategy
Fieldbus disruption	Acc. to substitute value strategy
S-bus (system bus) disruption	0 V status
Supply voltage under rated voltage	
tolerance	0 V status
Interruption of supply voltage	0 V status
Output operation	Non-latching
Overload behavior	Automatic restart
Counters:	
No. of counters	2
Counter type	Event/Gate time counter, pulse duration
Counting/switching frequency	0 Hz ... 1 kHz

Technical Data

System bus:	
Connection type (3)	M12 connectors, B coded, 5 poles,
	shielded
Standards and approvals:	
Conformity marking	CE
Korea Certification	
UL 508	
BVS 15 ATEX E 098 X	II 3G Ex nA IIC T5 Gc,
	II 3D Ex tc IIIB T90°C Dc
IECEx BVS 15.0083X	Ex nA IIC T5 Gc,
	Ex tc IIIB T90°C Dc
Isolation:	
Channel – Channel	no
U_{LS}, U_A, system bus	500 V DC each
Configurable functions:	
Operating mode (per module)	DO-Module/DI-Module/DIO-Module/
	DIO + 1 counter/DIO + 2 counters
Input filter (per channel)	0.1/ 0.5/ 3 /15 /20 ms/ filter off
Inversion (per channel)	On/off
Substitute value strategy (per channel)	Switch substitute value/hold last value
Substitute value (per channel)	0/1
Manual mode (per channel)	On/off
Manual mode value (per channel)	0/1
Online simulation (per channel)	Lock/unlock; simulation value: 0/1
Online simulation (per channel/module)	Diagnostics
I/O diagnostics:	
I/O diagnostics (per channel)	Overtemperature
I/O diagnostics (per module)	Sensor/Actuator supply short-circuit/
	overload; Undervoltage (U_{LS} + U_A)
Process image:	
Process data width	Depends on operating mode
LED indicators:	
SB: System bus status	LED (green/red/orange)
F: Error status	LED (red)
0 ... 7: Input and output signal status	LED (yellow)
0 ... 7: Output diagnostics	LED (red)
U_{LS} + U_A: Supply status	LED (green)
Indicators	Non-latching

General Specifications

Dimensions (mm) W x H x L	50 x 35.7 x 117
Weight	260 g

Digital Input/Output Module 24 V DC / 0.5 A

8 inputs/outputs (4 x M12, two inputs/outputs per connector)

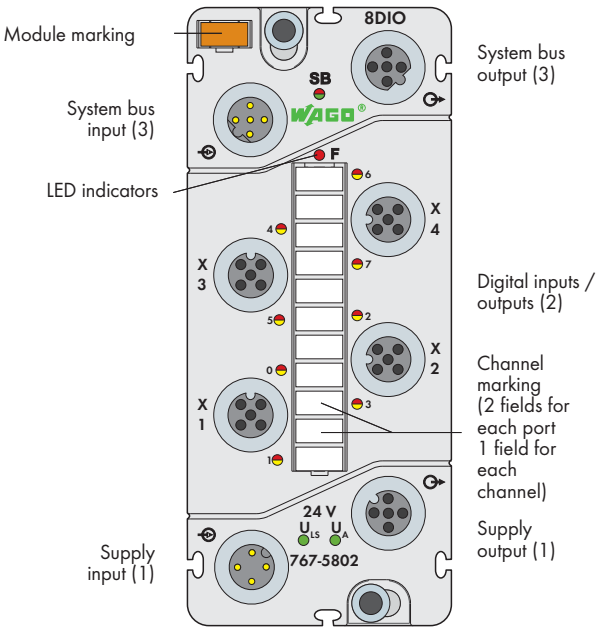

Short description:
This digital input/output module records binary signals from switches, sensors and proximity switches (BEROs)*. The module also controls actuators, such as magnetic valves, DC contactors and indicators.

* Does not apply to 767-5802/000-800

Features:
- 8 digital inputs/outputs, 24 VDC / 0.5 A
- Input/output, parametrizable (channel by channel)
- Diagnostic-capable (channel by channel/module by module)
- Parametrizable (operating mode, incl. counter, filter, inversion, substitute value strategy, substitute value, manual mode, online simulation and diagnostics)

Included:
- 1 x WMB marker, orange
- 1 x marking strip
- 2 x M12 protective cap

Description	Item No.	Pack. Unit
8DIO 24V DC 0.5A (4xM12)	**767-5802**	1
8DIO 24V DC 0.5A IF (4xM12)**	**767-5802/000-800**	1
** Interference-free for safety function applications (see manual)		

Accessories	Item No.
Marking strips, marking pen, spacer module and protective caps	see pages 520 ... 521
IP67 cables and connectors	see pages 502 ... 517 + Section 11

Technical Data	
Module supply:	
Connection type (1)	M12 connectors, A coded, 4 poles;
	Derating must be observed
Current carrying capacity of supply	
connections	max. 8 A (U_{LS}: 4 A, U_A: 4 A)
Supply voltage	
Logic and sensor voltage U_{LS}	24 V DC (-25 % ...+30 %)
Actuator voltage U_A	24 V DC (-25 % ...+30 %)
Supply current	
Logic and sensor current I_{LS}	typ. 45 mA (only logic part)
Actuator current I_A	typ. 75 mA + sensors/actuators
	(max. 800 mA) + load
Protection	Reverse voltage protection for U_{LS} + U_A
	Short-circuit protection for sensor/actuator
	supply
Digital inputs:	
Number of inputs	8
Connection type (2)	M12 connectors, A coded, 4 poles
Wire connection	2- or 3-wire

Technical Data	
Digital inputs:	
Input filter	Hardware: ≤ 110 µs
	Software: parametrizable
Input characteristic	Type 2, acc. to IEC 61131-2 (767-5802)
	Type 1, acc. to IEC 61131-2
	(767-5802/000-800)
Signal voltage (0)	-3 V ... +5 V DC
Signal voltage (1)	+11 ... +30 V DC (767-5802)
	+15 V ... +30 V DC (767-5802/000-800)
Input wiring	High-side switching
Input voltage	24 VDC (-3 VDC < U_{IN} < +30 VDC); Power
	from U_A is strongly recommended, recovery
	for voltages > U_A
Input current (typ.)	7.0 mA (767-5802)
	3.0 mA (767-5802/000-800)
Connection of 2-wire BEROs	max. 1.5 mA admissible closed current
Cable length, unshielded	≤ 30 m
Input characteristic:	
Input voltage	Typical input current
0 V DC	0
5 V	2.7 mA (767-5802)
	0.6 mA (767-5802/000-800)
11 V	6.8 mA (767-5802)
15 V	2.6 mA (767-5802/000-800)
24 V	7.0 mA (767-5802)
	3.0 mA (767-5802/000-800)
30 V	7.1 mA (767-5802)
	3.2 mA (767-5802/000-800)
Digital outputs:	
No. of outputs	8
Connection type (2)	M12 connectors, A coded, 4 poles
Wire connection	2- or 3-wire

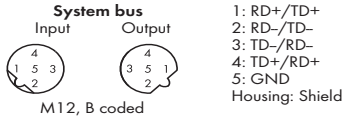

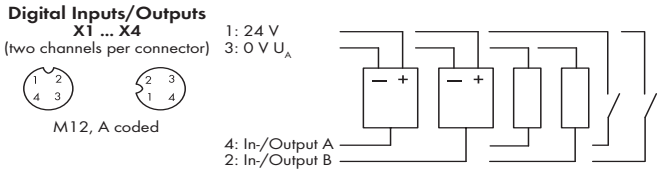

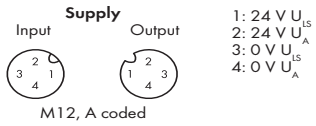

Block diagram of an input/output

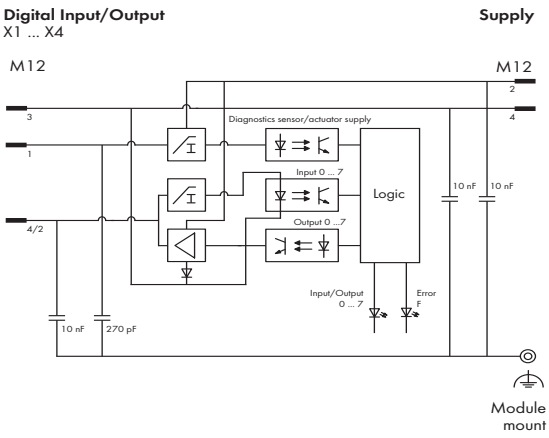

Technical Data

Digital outputs:	
Output voltage	≤ U_A
Output current (per channel)	0.5 A (max. 0.6 A),
	short-circuit/overload proof
	(thermal disconnection)
Voltage drop against U_A at 500 mA	max. 0.2 V DC
Output current (module)	max. 4 A
Leakage current in OFF state	typ. 5 µA
Output circuit	High-side switching
Information on actuator selection:	
Delay time hardware from "0" to "1"	
(0 – 90%)	typ. 90 µs (resistive load)
Delay time hardware from "1" to "0"	
(0 – 90%)	typ. 310 µs (resistive load)
Rise time from "0" to "1"	typ. 60 µs (resistive load)
Fall time from "1" to "0"	typ. 45 µs (resistive load)
Cable length, unshielded	≤ 30 m
Reverse current (in case of recovery for	
voltages > U_A)	≤ 0,5 A (error: 1 channel)
Type of load	Inductive, resistive loads and lamps
Switching frequency	Inductive load approx. 20 Hz
	Resistive load approx. 500 Hz
	Lamp load approx. 500 Hz
Parallel connection of 2 outputs	for power boost
	for redundant actuation of a load
Type of protective circuit	External protection (e.g., recovery diodes)
Output resistance	< 0.4 Ω
Operating state influence on output:	
PLC CPU stop	Acc. to substitute value strategy
Fieldbus disruption	Acc. to substitute value strategy
S-bus (system bus) disruption	0 V status
Supply voltage under rated voltage	
tolerance	0 V status
Interruption of supply voltage	0 V status
Output operation	Non-latching
Overload behavior	Automatic restart
Counters:	
No. of counters	2
Counter type	Event/Gate time counter, pulse duration
Counting/switching frequency	0 Hz ... 1 kHz

Technical Data

System bus:	
Connection type (3)	M12 connectors, B coded, 5 poles,
	shielded
Standards and approvals:	
Conformity marking	CE
Korea Certification	
UL 508	
BVS 15 ATEX E 098 X	II 3G Ex nA IIC T5 Gc,
	II 3D Ex tc IIIB T90°C Dc
IECEx BVS 15.0083X	Ex nA IIC T5 Gc,
	Ex tc IIIB T90°C Dc
Isolation:	
Channel – Channel	no
U_{LS}, U_A, system bus	500 V DC each
Configurable functions:	
Operating mode (per module)	DO-Module/DI-Module/DIO-Module/
	DIO + 1 counter/DIO + 2 counters
Input filter (per channel)	0.1/ 0.5/ 3 /15 /20 ms/ filter off
Inversion (per channel)	On/off
Substitute value strategy (per channel)	Switch substitute value/hold last value
Substitute value (per channel)	0/1
Manual mode (per channel)	On/off
Manual mode value (per channel)	0/1
Online simulation (per channel)	Lock/unlock; simulation value: 0/1
Online simulation (per channel/module)	Diagnostics
I/O diagnostics:	
I/O diagnostics (per channel)	Overtemperature
I/O diagnostics (per module)	Sensor/Actuator supply short-circuit/
	overload; Undervoltage (U_{LS} + U_A)
Process image:	
Process data width	Depends on operating mode
LED indicators:	
SB: System bus status	LED (green/red/orange)
F: Error status	LED (red)
0 ... 7: Input and output signal status	LED (yellow)
0 ... 7: Output diagnostics	LED (red)
U_{LS} + U_A: Supply status	LED (green)
Indicators	Non-latching

General Specifications

Dimensions (mm) W x H x L	50 x 35.7 x 117
Weight	255 g

Digital Input/Output Module 24 V DC / 0.5 A

8 inputs/outputs (8 x M12)

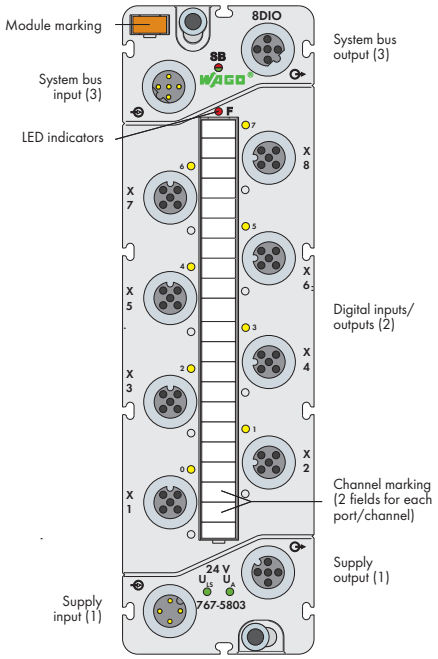

Short description:
This digital input/output module records binary signals from switches, sensors and proximity switches (BEROs)*. The module also controls actuators, such as magnetic valves, DC contactors and indicators.

* Does not apply to 767-5803/000-800

Features:
- 8 digital inputs/outputs, 24 VDC / 0.5 A
- Input/output, parametrizable (channel by channel)
- Diagnostic-capable (channel by channel/module by module)
- Parametrizable (operating mode, incl. counter, filter, inversion, substitute value strategy, substitute value, manual mode, online simulation and diagnostics)

Included:
- 1 x WMB marker, orange
- 1 x marking strip
- 2 x M12 protective cap

Description	Item No.	Pack. Unit
8DIO 24V DC 0.5A (8xM12)	**767-5803**	1
8DIO 24V DC 0.5A IF (8xM12)**	**767-5803/000-800**	1
** Interference-free for safety function applications (see manual)		

Accessories	Item No.
Marking strips, marking pen, spacer module and protective caps	see pages 520 ... 521
IP67 cables and connectors	see pages 502 ... 517 + Section 11

Technical Data	
Module supply:	
Connection type (1)	M12 connectors, A coded, 4 poles;
	Derating must be observed
Current carrying capacity of supply	
connections	max. 8 A (U_{LS}: 4 A, U_A: 4 A)
Supply voltage	
Logic and sensor voltage U_{LS}	24 V DC (-25 % ... +30 %)
Actuator voltage U_A	24 V DC (-25 % ...+30 %)
Supply current	
Logic and sensor current I_{LS}	typ. 45 mA (only logic part)
Actuator current I_A	typ. 75 mA + sensors/actuators
	(max. 800 mA) + load
Protection	Reverse voltage protection for U_{LS} + U_A
	Short-circuit protection for sensor/actuator
	supply
Digital inputs:	
Number of inputs	8
Connection type (2)	M12 connectors, A coded, 4 poles
Wire connection	2- or 3-wire

Technical Data	
Digital inputs:	
Input filter	Hardware: ≤ 60 µs
	Software: parametrizable
Input characteristic	Type 2, acc. to IEC 61131-2 (767-5803)
	Type 1, acc. to IEC 61131-2
	(767-5803/000-800)
Signal voltage (0)	-3 V ... +5 V DC
Signal voltage (1)	+11 V ... +30 V DC (767-5803)
	+15 ... +30 VDC (767-5803/000-800)
Input wiring	High-side switching
Input voltage	24 VDC (-3 VDC < U_{IN} < +30 VDC); Power
	from U_A is strongly recommended, recovery
	for voltages > U_A
Input current (typ.)	7.0 mA (767-5803)
	3.0 mA (767-5803/000-800)
Connection of 2-wire BEROs	max. 1.5 mA admissible closed current
Cable length, unshielded	≤ 30 m
Input characteristic:	
Input voltage	Typical input current
0 V DC	0
5 V	2.7 mA (767-5803)
	0.6 mA (767-5803/000-800)
11 V	6.8 mA (767-5803)
15 V	2.6 mA (767-5803/000-800)
24 V	7.0 mA (767-5803)
	3.0 mA (767-5803/000-800)
30 V	7.1 mA (767-5803)
	3.2 mA (767-5803/000-800)
Digital outputs:	
No. of outputs	8
Connection type (2)	M12 connectors, A coded, 4 poles
Wire connection	2- or 3-wire

System bus

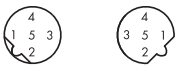

M12 B coded

1: RD+/TD+
2: RD–/TD–
3: TD–/RD–
4: TD+/RD+
5: GND
Housing: Shield

Digital Inputs/Outputs X1 ... X8

M12 A coded

1: 24 V
3: 0 V U_A

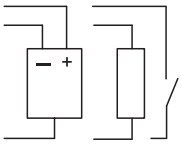

4: In-/Output
2: n.c.

Supply

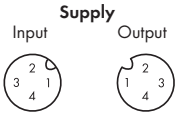

M12 A coded

1: 24 V U_{LS}
2: 24 V U_A
3: 0 V U_{LS}
4: 0 V U_A

Block diagram of an input/output

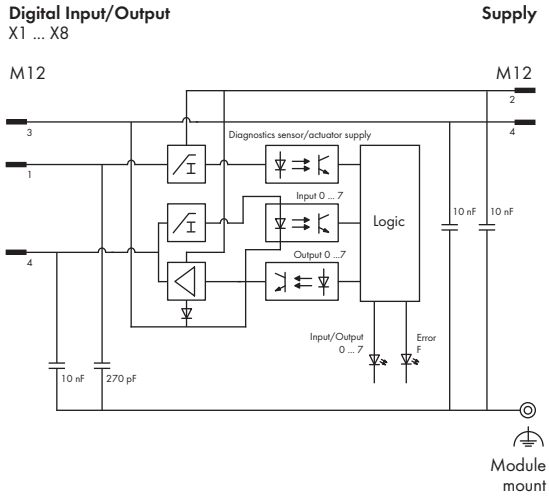

Technical Data

Digital outputs:	
Output voltage	≤ U_A
Output current (per channel)	0.5 A (max. 0.6 A),
	short-circuit/overload proof
	(thermal disconnection)
Voltage drop against U_A at 500 mA	max. 0.2 V DC
Output current (module)	max. 4 A
Leakage current in OFF state	typ. 5 µA
Output circuit	High-side switching
Information on actuator selection:	
Delay time hardware from "0" to "1"	
(0 – 90%)	typ. 70 µs (resistive load)
Delay time hardware from "1" to "0"	
(0 – 90%)	typ. 180 µs (resistive load)
Rise time from "0" to "1"	typ. 40 µs (resistive load)
Fall time from "1" to "0"	typ. 40 µs (resistive load)
Cable length, unshielded	≤ 30 m
Reverse current (in case of recovery for	
voltages > U_A)	≤ 0,5 A (error: 1 channel)
Type of load	Inductive, resistive loads and lamps
Switching frequency	Inductive load approx. 20 Hz
	Resistive load approx. 500 Hz
	Lamp load approx. 500 Hz
Parallel connection of 2 outputs	for power boost
	for redundant actuation of a load
Type of protective circuit	External protection (e.g., recovery diodes)
Output resistance	< 0.4 Ω
Operating state influence on output:	
PLC CPU stop	Acc. to substitute value strategy
Fieldbus disruption	Acc. to substitute value strategy
S-bus (system bus) disruption	0 V status
Supply voltage under rated voltage	
tolerance	0 V status
Interruption of supply voltage	0 V status
Output operation	Non-latching
Overload behavior	Automatic restart
Counters:	
No. of counters	2
Counter type	Event/gate time counter, pulse duration
Counting/switching frequency	0 Hz ... 1 kHz

Technical Data

System bus:	
Connection type (3)	M12 connectors, B coded, 5 poles, shielded
Standards and approvals:	
Conformity marking	CE
Korea Certification	
cULus UL 508	
BVS 15 ATEX E 098 X	II 3G Ex nA IIC T5 Gc,
	II 3D Ex tc IIIB T90°C Dc
IECEx BVS 15.0083X	Ex nA IIC T5 Gc,
	Ex tc IIIB T90°C Dc
Isolation:	
Channel – Channel	no
U_{LS}, U_A, system bus	500 V DC each
Configurable functions:	
Operating mode (per module)	DO-Module/DI-Module/DIO-Module/
	DIO + 1 counter/DIO + 2 counters
Counter	Count direction, start/limit value switching
	output, gate time
Input filter (per channel)	0.1/ 0.5/ 3 /15 /20 ms/ filter off
Inversion (per channel)	On/off
Substitute value strategy (per channel)	Switch substitute value/hold last value
Substitute value (per channel)	0/1
Manual mode (per channel)	On/off
Manual mode value (per channel)	0/1
Online simulation (per channel)	Lock/unlock; simulation value: 0/1
Online simulation (per channel/module)	Diagnostics
I/O diagnostics:	
I/O diagnostics (per channel)	Overtemperature
I/O diagnostics (per module)	Sensor/Actuator supply short-circuit/
	overload; Undervoltage (U_{LS} + U_A)
Process image:	
Process data width	Depends on operating mode
LED indicators:	
SB: System bus status	LED (green/red/orange)
F: Error status	LED (red)
0 ... 7: Input and output signal status	LED (yellow/red)
U_{LS} + U_A: Supply status	LED (green)
Indicators	Non-latching

General Specifications

Dimensions (mm) W x H x L	50 x 35.7 x 170
Weight	389 g

Digital Input/Output Module, 24 VDC / 0.2 A, High Speed

4 inputs/outputs (4 x M12)

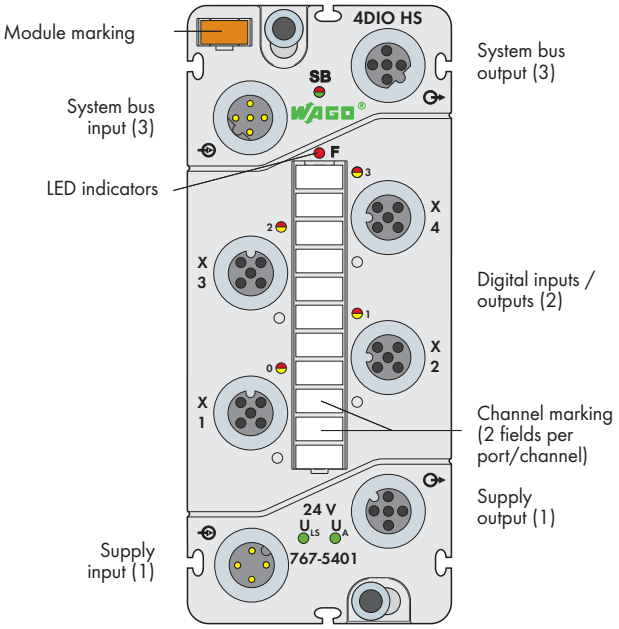

Short description:
This digital input/output module records/outputs binary signals from sensors/actuators with short response times. The 767-5401 Module features high-speed inputs/outputs, making it ideal for use with fast ETHERNET-based fieldbus systems (e.g., sercos).

Features:
- 4 digital inputs/outputs, 24 VDC / 0.2 A, incl. counter function
- Front-end cycle time (hardware) max. 3 µs
- Diagnostic-capable (channel by channel/module by module)
- Parametrizable (operating mode, filter, inversion, substitute value strategy, substitute value, manual mode, online simulation and diagnostics)

Included:
- 1 x WMB marker, orange
- 1 x marking strip
- 2 x M12 protective cap

Description	Item No.	Pack. Unit
4DIO 24VDC 0.2A HS (4xM12)	**767-5401**	1

Accessories	Item No.
Marking strips, marking pen, spacer module and protective caps	see pages 520 ... 521
IP67 cables and connectors	see pages 502 ... 517 + Section 11

Technical Data

Module supply:	
Connection type (1)	M12 connectors, A coded, 4 poles; Derating must be observed
Current carrying capacity of supply connections	Max. 8 A (U_{LS}: 4 A, U_A: 4 A)
Supply voltage	
Logic and sensor voltage U_{LS}	24 V DC (-25 % ... +30 %)
Actuator voltage U_A	24 V DC (-25 % ... +30 %)
Supply current	
Logic and sensor current I_{LS}	typ. 40 mA (logic component only)
Actuator current I_A	typ. 30 mA + sensors/actuators (max. 1000 mA) + load
Protection	Reverse voltage protection for U_{LS} + U_A; Short-circuit protection for sensor/actuator supply

Technical Data

Digital inputs:	
Number of inputs	4
Connection type (2)	M12 connectors, A coded, 5 poles, shielded
Wire connection	2- or 3-wire
Front-end cycle time (hardware)	max. 3 µs
Front-end jitter/skew (input)	< 2 µs
Input characteristic	Type 1, acc. to IEC 61131-2
Signal voltage (0)	-3 V ... +5 V DC
Signal voltage (1)	+15 V ... +30 V DC
Input wiring	high-side switching
Input voltage	24 VDC (-3 VDC < U_{IN} < +30 VDC); Power from U_A strongly recommended
Input current (typ.)	2.9 mA
Connection of 2-wire BEROs	max. 1.5 mA admissible closed current
Wrong connection of inputs	No effect
Cable length, shielded	≤ 30 m
Input characteristic:	
Input voltage	Typical input current
0 V	0 mA
5 V	2.0 mA
15 V	2.5 mA
24 V	2.9 mA
30 V	3.2 mA

System bus

M12, B coded

1: RD+/TD+
2: RD–/TD–
3: TD–/RD–
4: TD+/RD+
5: GND
Housing: Shield

Digital Inputs/Outputs X1 ... X4

M12, A coded

1: 24 V
3: 0 V U_A
5: Shield
4: In-/Output
Housing: Shield

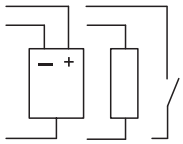

Supply

Input Output

M12, A coded

1: 24 V U_{LS}
2: 24 V U_A
3: 0 V U_{LS}
4: 0 V U_A

Block diagram of an input/output

Digital Input/Output
X1 ... X4

Supply

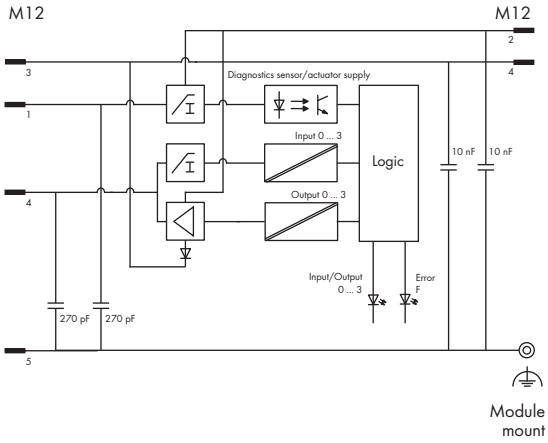

Technical Data

Digital outputs:	
No. of outputs	4
Connection type (2)	M12 connectors, A coded, 5 poles, shielded
Wire connection	2- or 3-wire
Output voltage	≤ U_A
Output current (per channel)	0.2 A, short-circuit/overload proof (thermal disconnection)
Voltage drop against UA at 200 mA	Max. 2.0 V DC
Output current (module)	max. 0.8 A
Leakage current in OFF state	typ. 100 µA
Output circuit	Push/Push
Information on actuator selection:	
Front-end cycle time 90% (hardware)	max. 0,5 µs
Edge steepness	$T_{ON/OFF}$: typ. < 0,2 µs
Front-end jitter/skew (output)	< 0,2 µs
Type of load	Inductive, resistive loads and lamps
Switching frequency	Inductive load upon request
	Resistive load upon request
	Lamp load upon request
Type of protective circuit	External protection (e.g., recovery diodes)
Operating state influence on output:	
PLC CPU stop	Acc. to substitute value strategy
Fieldbus disruption	Acc. to substitute value strategy
S-bus (system bus) disruption	0 V status
Supply voltage under rated voltage tolerance	0 V status
Interruption of supply voltage	0 V status
Output operation	Non-latching
Overload behavior	Automatic restart
Counters:	
No. of counters	1
Counter type	Event, gateway time, pulse duration
Counting/switching frequency	0 Hz ... 1 kHz

Technical Data

System bus:	
Connection type (3)	M12 connectors, B coded, 5 poles, shielded
Standards and approvals:	
Conformity marking	CE
cULus UL 508	
BVS 15 ATEX E 098 X	II 3G Ex nA IIC T5 Gc, II 3D Ex tc IIIB T90°C Dc
IECEx BVS 15.0083X	Ex nA IIC T5 Gc, Ex tc IIIB T90°C Dc
Isolation:	
Channel – Channel	No
U_{LS}, U_A, system bus	500 VDC each
Configurable functions:	
Operating mode (per module)	DO module/DI module/DIO module/ DIO + 1 counter
Input filter (per channel)	10/ 25/ 50/ 100/ 200 µs/ 1/ 3 ms/ filter off
Inversion (per channel)	On/off
Substitute value strategy (per channel)	Switch substitute value/hold last value
Substitute value (per channel)	0/1
Manual mode (per channel)	On/off
Manual mode value (per channel)	0/1
Online simulation (per channel)	Lock/unlock, simulation value: 0/1
Online simulation (per channel/module)	Diagnostics
I/O diagnostics:	
I/O diagnostics (per channel)	Overtemperature
I/O diagnostics (per module)	Short-circuit of sensor/actuator supply
	Undervoltage (U_{LS} + U_A)
Process image:	
Process data width	depends on operating mode
LED indicators:	
SB: System bus status	LED (green/red/orange)
F: Error status	LED (red)
0 – 3: Signal status, inputs/outputs	LED (yellow/red)
0 – 3: Diagnostics, outputs	LED (red)
U_{LS} + U_A: Supply status	LED (green)
Indicators	Non-latching

General Specifications

Dimensions (mm) W x H x L	50 x 35.7 x 117
Weight	255 g

Analog Input Module Voltage/Current

4 inputs

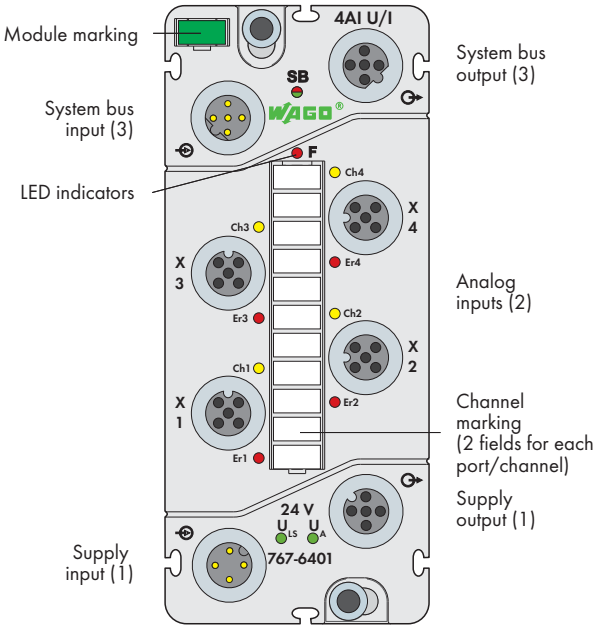

Short description:
Analog input module records voltage and current signals.

Characteristics:
- 4 analog inputs 0-20 mA, 0-22 mA (acc. to NAMUR NE43), 4-20 mA, ±20 mA, 0-10 V or ±10 V
- Diagnostic capable
- Parametrizable (measuring range, limiting value, filter, substitute value, online simulation and diagnostics)

Included:
- Module WMB marker card, green (1 pcs)
- Marker strips (1 pcs)
- M12 protective caps (2 pcs)

Description	Item No.	Pack. Unit
4AI U/I	**767-6401**	1

Accessories	Item No.
Marking strips, marking pen, spacer module and protective caps	see pages 520 ... 521
IP67 cables and connectors	see pages 502 ... 517 + Section 11

Technical Data	
Module supply:	
Connection type (1)	M12 connectors, A coded, 4 poles;
	Derating must be observed
Current carrying capacity of supply	
connections	Max. 8 A (U_{LS}: 4 A, U_A: 4 A)
Supply voltage	
Logic and sensor voltage U_{LS}	24 V DC (-25 % ... +30 %)
Actuator voltage U_A	24 V DC (-25 % ... +30 %);
	Also required for power supply transmission
Supply current	
Logic and sensor current I_{LS}	50 mA + sensors (max. 400 mA)
Actuator current I_A	5mA
Protection	Reverse voltage protection for U_{LS} + U_A;
	short circuit protection for sensor supply
Analog inputs:	
Number of inputs	4
Connection type (2)	M12 connectors, A coded, 5 poles
Type of signal	Currents and voltages (differencial inputs)
Wire connection	2-/3-/4-wire (external shield (screen)
	via knurled nut)
Measuring range	0-20mA, 0-22mA, 4-20mA, ±20mA,
	0-10V, ±10V
Input impedance	AI(U) ≥ 100 kΩ
	AI(I) ≤ 200 Ω at 20 mA
Type of cable, cable length	shielded, ≤ 30 m

System bus

Input Output

M12 B coded

1: RD+/TD+
2: RD–/TD–
3: TD–/RD–
4: TD+/RD+
5: GND
Housing: Shield

Analog Inputs
X1 ... X4

M12 A coded

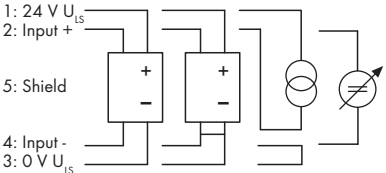

1: 24 V U_{LS}
2: Input +
5: Shield
4: Input -
3: 0 V U_{LS}
Housing: Shield

Supply

Input Output

M12 A coded

1: 24 V U_{LS}
2: 24 V U_A
3: 0 V U_{LS}
4: 0 V U_A

Block diagram of an input

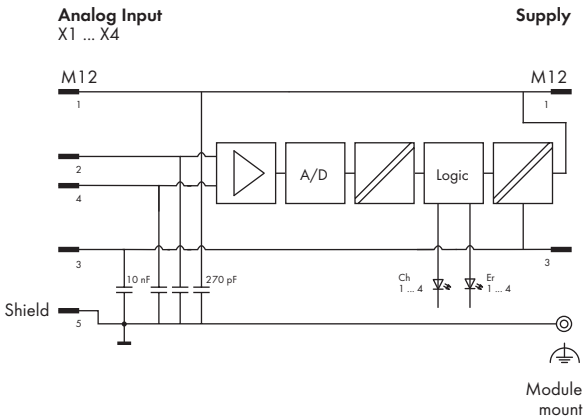

Technical Data

Analog value creation:	
Resolution	16 bits
Conversion method	SAR
Monotonicity without error code	yes
Conversion time	1 ms
Sampling delay	1 ms (module)
	< 100 µs (channel/channel)
Sampling repeat time	1ms
Failures and errors:	
Voltage proof	up to 32 V (internal current limitation)
Max. measuring error at 25 °C	≤ ± 0.2 % of the measuring range
Temperature error	≤ 100 ppm/K of measuring range
Maximum error over the full	
temperature range	≤ ± 0.6 % of the measuring range
System bus:	
Connection type (3)	M12 connectors, B coded, 5 poles,
	shielded
Standards and approvals:	
Conformity marking	CE
Korea Certification	KC
cULus UL 508	
BVS 15 ATEX E 098 X	II 3G Ex nA IIC T5 Gc,
	II 3D Ex tc IIIB T90°C Dc
IECEx BVS 15.0083X	Ex nA IIC T5 Gc,
	Ex tc IIIB T90°C Dc

Technical Data

Isolation:	
Channel – Channel	No
U_{LS}, U_A, system bus	500 V DC each
Configurable functions:	
Measuring range (per channel)	0-20 mA, 4-20 mA, ±20 mA, 0-10 V,
	±10 V, user-defined
Limiting values (per channel)	Min./Max.
Input filter (per channel)	50 Hz / 60 Hz / filter off
Substitute value (per channel)	Value
Online simulation (per channel)	Lock/unlock; simulation value: (according
	to measuring range)
Online simulation (per channel/	
module)	Diagnostics
I/O diagnostics:	
I/O diagnostics (per channel)	Overrange/measuring range underflow
	and wire break at 4-20 mA
	Overcurrent
	Limit value violation (min/max)
I/O diagnostics (per module)	Short circuit/overload (sensor supply)
	undervoltage (U_{LS} + U_A)
Process image:	
Process data width	8-byte data + status
LED indicators:	
SB: System bus status	LED (green/red/orange)
F: Error status	LED (red)
Ch1 ... Ch4: Input signal status	LED (yellow)
Er1 ... Er4: Input signal error	LED (red)
U_{LS} + U_A: Supply status	LED (green)
Indicators	Non-latching

General Specifications

Dimensions (mm) W x H x L	50 x 35.7 x 117
Weight	262 g

Analog Input Module RTD

4 inputs

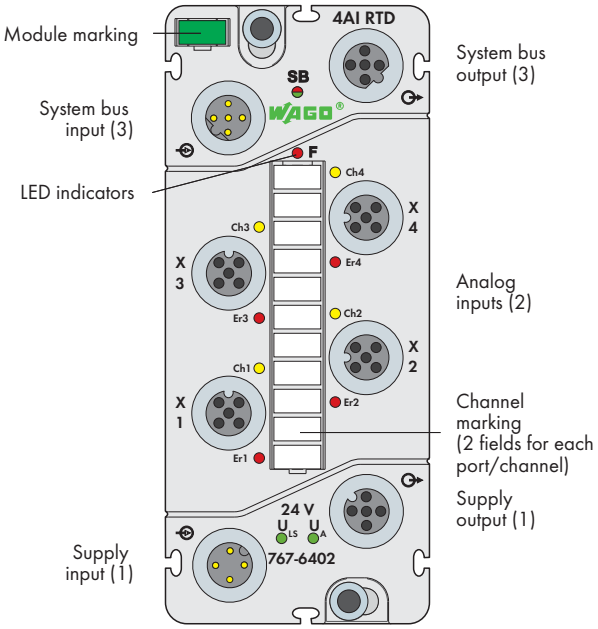

Short description:
Analog input module records the values from resistance thermometers, resistors and potentiometer adjustment.

Characteristics:
- 4 RTD analog inputs
- Diagnostic capable
- Parametrizable (measuring range, limiting value, filter, substitute value, online simulation and diagnostics)

Included:
- Module WMB marker card, green (1 pcs)
- Marker strips (1 pcs)
- M12 protective caps (2 pcs)

Description	Item No.	Pack. Unit
4AI RTD	**767-6402**	1

Accessories	Item No.
Marking strips, marking pen, spacer module and protective caps	see pages 520 ... 521
IP67 cables and connectors	see pages 502 ... 517 + Section 11

Technical Data	
Module supply:	
Connection type (1)	M12 connectors, A coded, 4 poles;
	Derating must be observed
Current carrying capacity of supply	
connections	Max. 8 A (U_{LS}: 4 A, U_A: 4 A)
Supply voltage	
Logic and sensor voltage U_{LS}	24 V DC (-25 % ... +30 %)
Actuator voltage U_A	24 V DC (-25 % ... +30 %);
	Also required for power supply transmission
Supply current	
Logic and sensor current I_{LS}	typ. 40 mA
Actuator current I_A	4mA
Protection	Reverse voltage protection for U_{LS} + U_A
Analog inputs:	
Number of inputs	4
Connection type (2)	M12 connectors, A coded, 5 poles
Type of signal	Resistors, Potentiometer Positions
Wire connection	2-/3-/4-wire (external shield (screen)
	via knurled nut)
Signal measuring range	
Resistance thermometer	Pt100, Pt200, Pt500, Pt1000
	Ni100, Ni120, Ni1000
Resistors	1 kΩ and 4 kΩ
Potentiometer	0 ... 100 % setting angle
	(for 1 kΩ and 4 kΩ)
Temperature range	Pt: -200°C ... +850°C
	Ni: -60°C ... +250°C
Resolution (over entire range)	0.05 °C / 0.05 Ω/ 0.25 Ω / 0.005 %
Measuring current	< 0.5 mA
Type of cable, cable length	shielded, ≤ 30 m

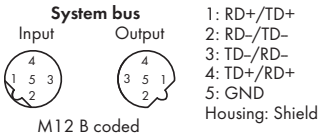

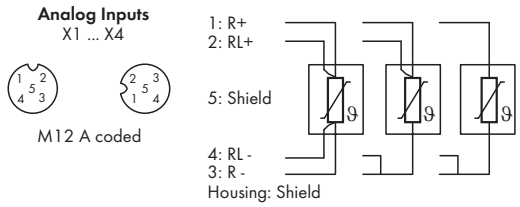

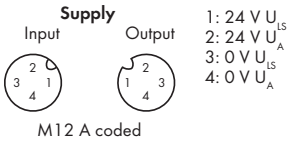

Block diagram of an input

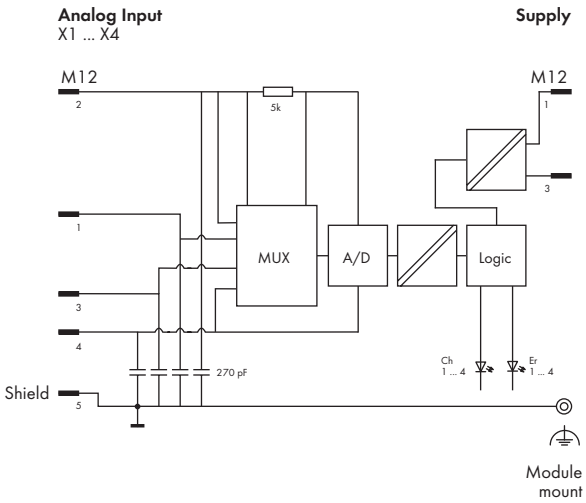

Technical Data

Analog value creation:	
Resolution	16 bits
Integration time	2 - 120ms
Conversion method	SigmaDelta
Monotonicity without error code	yes
Conversion time	1/Input sampling frequency (s)
Sampling repeat time	Number of active channels x conversion time x 2
Failures and errors:	
Max. measuring error at 25°C	± 0.1 % of the measuring range
Temperature error	± 0.001 % of the measuring range/ K
Maximum error over the full temperature range	< 2°C
Maximum temporary deviation	0.05 °C
Repeat accuracy	0.05 °C
System bus:	
Connection type (3)	M12 connectors, B coded, 5 poles, shielded
Standards and approvals:	
Conformity marking	CE
Korea Certification	
UL 508	
BVS 15 ATEX E 098 X	II 3G Ex nA IIC T5 Gc, II 3D Ex tc IIIB T90°C Dc
IECEx BVS 15.0083X	Ex nA IIC T5 Gc, Ex tc IIIB T90°C Dc

Technical Data

Isolation:	
Channel – Channel	No
U_{LS}, U_A, system bus	500 V DC each
Configurable functions:	
Measuring range (per channel)	Pt100/ Pt200/ Pt500/ Pt1000, Ni100/ Ni120/ Ni1000; 1 kΩ / 4 kΩ; 0 ... 100 % setting angle (for 1 kΩ and 4 kΩ); user-defined
Wire connection (per channel)	2-wire/3-wire/4-wire
Limiting values (per channel)	Min./Max.
Integration time (per channel)	2, 4, 8, 16.7, 20, 30, 60, 120ms
Linearization (per channel)	Linear/Pt/Ni/Ni TK 5000/Ni TK 6720
Online simulation (per channel)	Lock/unlock; simulation value: (according to measuring range)
Online simulation (per channel/ module)	Diagnostics
I/O diagnostics:	
I/O diagnostics (per channel)	Measurement range overflow/underflow Limit violation (min./max.)
I/O diagnostics (per module)	Undervoltage (U_{LS} + U_A)
Process image:	
Process data width	8-byte data + status
LED indicators:	
SB: System bus status	LED (green/red/orange)
F: Error status	LED (red)
Ch1 ... Ch4: Input signal status	LED (yellow)
Er1 ... Er4: Input signal error	LED (red)
U_{LS} + U_A: Supply status	LED (green)

General Specifications

Dimensions (mm) W x H x L	50 x 35.7 x 117
Weight	280 g

Analog Input Module for Thermocouples (TCs)

4 inputs

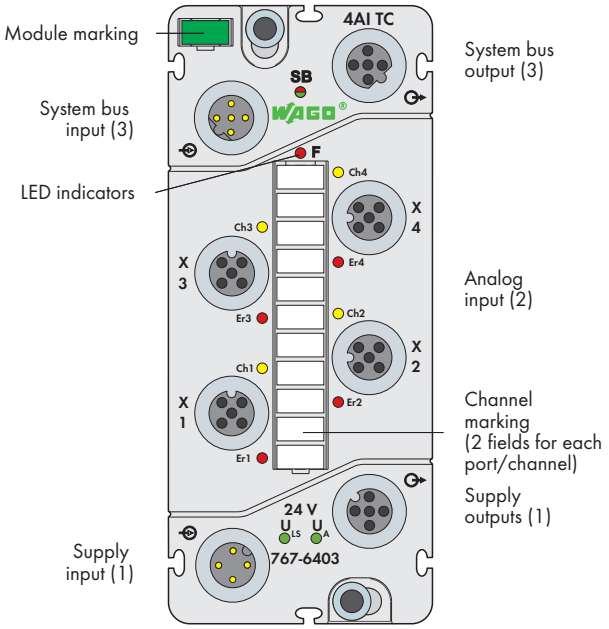

Short description:
This analog input module receives the measured values from thermocouples and voltage sensors.

Characteristics:
- 4 analog inputs TC*
- Diagnostic capable
- Parametrizable (measuring range, limiting values, filter, cold junction compensation, substitute value, online simulation and diagnostics)

* Preassembled connector for cold junction compensation available as accessory.

Included:
- WMB module marker card, green
- Marker strip
- M12 protective caps (2 pcs)

Description	Item No.	Pack. Unit
4AI TC	**767-6403**	1

Accessories	Item No.
Marking strips, marking pen, spacer module and protective caps	see pages 520 ... 521
IP67 cables and connectors	see pages 502 ... 517 + Section 11
Compensation connector, M12 plug, straight, spring clamp technology	**756-9207/050-000**

Technical Data	
Module supply:	
Connection type (1)	M12 connectors, A coded, 4 poles;
	Derating must be observed
Current carrying capacity of supply connections	Max. 8 A (U_{LS}: 4 A, U_A: 4 A)
Supply voltage	
Logic and sensor voltage U_{LS}	24 V DC (-25 % ... +30 %)
Actuator voltage U_A	24 V DC (-25 % ... +30 %);
	Also required for power supply transmission
Supply current	
Logic and sensor current I_{LS}	Typ. 40 mA
Actuator current I_A	≤ 5mA
Protection	Reverse voltage protection for U_{LS} + U_A
Analog inputs:	
Number of inputs	4
Connection type (2)	M12 connectors, A coded, 5 poles
Type of signal	Thermocouple and low voltages
Wire connection	2-wire
	(external shield (screen)
	via knurled nut)

System bus

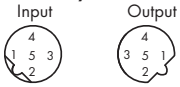

M12 B coded

1: RD+/TD+
2: RD–/TD–
3: TD–/RD–
4: TD+/RD+
5: GND
Housing: Shield

Analog Inputs
X1 ... X4

M12 A coded

1: CompIn/Pt1000
2: In+/TC+
3: GND/Pt1000
4: In-/TC-
5: Shield

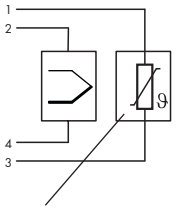

Integrated PT1000 sensor of compensation connector

Supply

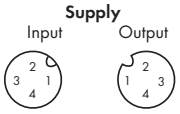

M12 A coded

1: 24 V U_{LS}
2: 24 V U_A
3: 0 V U_{LS}
4: 0 V U_A

Block diagram of an input

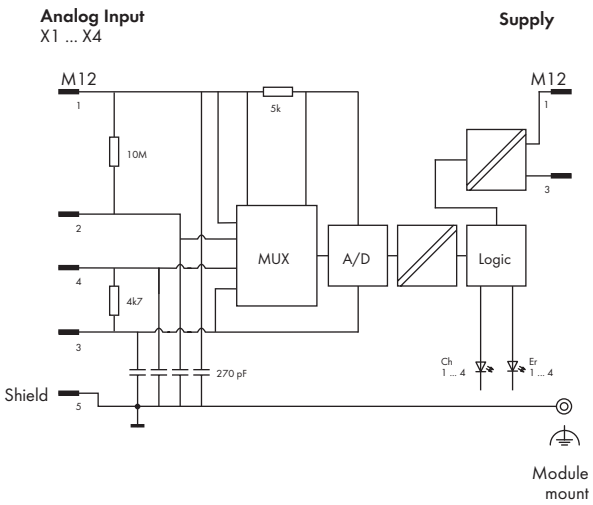

Technical Data

Analog inputs:	
Signal measuring range	
Measuring range	**Thermocouples:**
	Type B: +200°C ... +1,820°C
	Type C: 0°C ... +2320 °C
	Type E: –250°C ... +1000°C
	Type J: –210°C... +1200°C
	Type K: –210°C ... +1370°C
	Type N: –210°C ...+1300°C
	Type R: –50°C ...+1768°C
	Type S: –50°C ... +1768°C
	Type T: –210°C ... +400°C
	Voltage sensors:
	MB1: ± 36 mV
	MB2: ± 72 mV
	MB3: ± 145 mV
	MB4: ± 290 mV
Resolution (over entire range)	0.1 °C or 0.01 mV
Type of cable, cable length	shielded, ≤ 30 m
Analog value creation:	
Resolution	16 bits
Integration time	2 - 120ms
Conversion method	SigmaDelta
Monotonicity without error code	Yes
Conversion time	Integration time x 3
Sampling repeat time	Number of active channels x conversion time
Failures and errors:	
Max. measuring error (without temperature compensation)	≤ ± 1 K over the entire measuring range (for type K)
Max. measuring error cold junction	≤ ± 1K
Temperature error	± 0.05 K/K (type K)
Maximum error over the full temperature range	± 3K
System bus:	
Connection type (3)	M12 connectors, B coded, 5 poles, shielded
Standards and approvals:	
Conformity marking	CE
Korea Certification	
UL 508	

Technical Data

Standards and approvals:	
BVS 15 ATEX E 098 X	II 3G Ex nA IIC T5 Gc,
	II 3D Ex tc IIIB T90°C Dc
IECEx BVS 15.0083X	Ex nA IIC T5 Gc,
	Ex tc IIIB T90°C Dc
Isolation:	
Channel – Channel	No
U_{LS}, U_A, system bus	500 V DC each
Configurable functions:	
Measuring range (per channel)	Type B; C; E; J; K; N; R; S; T
	MB 1; MB 2; MB 3; MB 4;
	user-defined
Limiting values (per channel)	Min./Max.
Integration time (per channel)	2, 4, 8, 16.7, 20, 30, 60, 120ms
Linearization (per channel)	Linear; Type B; C; ...T
Substitute value (per channel)	Value
Cold junction compensation (per channel)	**Type:** Fixed temperature;
	Compensation on the current input;
	Compensation on the previous input;
	Temperature: Value
	Offset: Value
Online simulation (per channel)	Lock/unlock; simulation value: (according to measuring range)
Online simulation (per channel/ module)	Diagnostics
I/O diagnostics:	
I/O diagnostics (per channel)	Overrange/measuring range underflow
	Limit value violation (min/max)
	Wire break
I/O diagnostics (per module)	Undervoltage (U_{LS} + U_A)
Process image:	
Process data width	8-byte data + status
LED indicators:	
SB: System bus status	LED (green/red/orange)
F: Error status	LED (red)
Ch1 ... Ch4: Input signal status	LED (yellow)
Er1 ... Er4: Input signal error	LED (red)

General Specifications

Dimensions (mm) W x H x L	50 x 35.7 x 117
Weight	280 g

Analog Output Module Voltage/Current

4 outputs

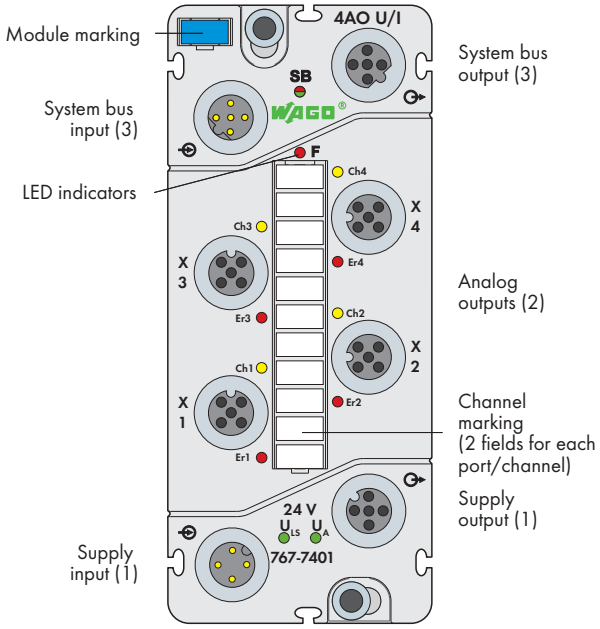

Short description:
Analog output module for the output of voltage and current signals.

Characteristics:
- 4 analog outputs 0-20 mA, 4-20 mA, ±20 mA, 0-10 V or ±10 V
- Diagnostic capable
- Parametrizable (measuring range, substitute value strategy, substitute value, manual mode, online simulation and diagnostics)

Included:
- Module WMB marker card, blue (1 pcs)
- Marker strips (1 pcs)
- M12 protective caps (2 pcs)

Description	Item No.	Pack. Unit
4AO U/I	**767-7401**	1

Accessories	Item No.
Marking strips, marking pen, spacer module and protective caps	see pages 520 ... 521
IP67 cables and connectors	see pages 502 ... 517 + Section 11

Technical Data	
Module supply:	
Connection type (1)	M12 connectors, A coded, 4 poles;
	Derating must be observed
Current carrying capacity of supply connections	Max. 8 A (U_{LS}: 4 A, U_A: 4 A)
Supply voltage	
Logic and sensor voltage U_{LS}	24 V DC (-25 % ... +30 %)
Actuator voltage U_A	24 V DC (-25 % ... +30 %)
Supply current	
Logic and sensor current I_{LS}	28 mA (only logic part)
Actuator current I_A	34 mA + actuators
Protection	Reverse voltage protection for U_{LS} + U_A;
	Overload and short circuit protection for U_A
Analog outputs:	
No. of outputs	4
Connection type (2)	M12 connectors, A coded, 5 poles
Type of signal	Currents and voltages
Wire connection	2-/3-/4-wire (external shield (screen) via knurled nut)
Measuring range	0-20mA, 4-20mA, ±20mA, 0-10V, ±10V
Output load (load impedance)	≤ 500 Ω (current)
	≥ 5 kΩ (voltage)
Maximum capacitive load (at voltage outputs)	10 nF
Maximum inductive load (at current outputs)	1 mH
Type of cable, cable length	shielded, ≤ 30 m

System bus

Input Output

M12 B coded

1: RD+/TD+
2: RD–/TD–
3: TD–/RD–
4: TD+/RD+
5: GND
Housing: Shield

Analoge Outputs
X1 ... X4

M12 A coded

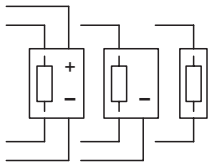

2: 24 V
1: Output +/-
5: Schield
3: Output -
4: 0 V U_A
Housing: Shield

Supply

Input Output

M12 A coded

1: 24 V U_{LS}
2: 24 V U_A
3: 0 V U_{LS}
4: 0 V U_A

Block diagram of an output

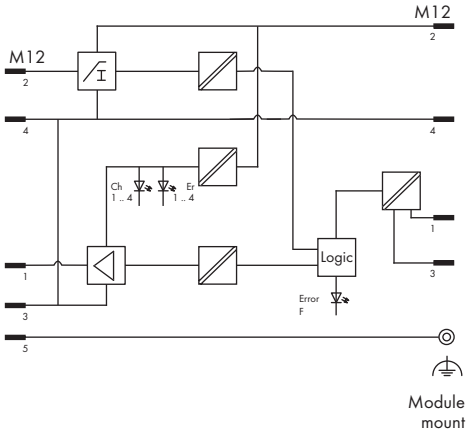

Technical Data

Analog value creation:	
Resolution	15-bit unipolar,
	16-bit bipolar
Monotonicity	yes
Cycle time	approx. 1 ms
Recovery time for resistive, inductive	
and capacitive loads	approx. 1 ms
Failures and errors:	
Maximum continuous overload	
(without failure)	0 Ω
Max. measuring error at 25 °C	≤ ± 0.2 % of the measuring range
Temperature error	≤ 100 ppm/K of measuring range
Maximum error over the full	
temperature range	≤ ± 0.6 % of the measuring range
Overshooting	approx. ± 0.05 % of the measuring range
Output ripple	approx. ± 0.02 % of the measuring range
Crosstalk between the channels at	
DC voltage and AC voltage 50 Hz	
and 60 Hz	- 90 dB
Short circuit protection	electronic
Nominal output current	max. 1 A
System bus:	
Connection type (3)	M12 connectors, B coded, 5 poles,
	shielded
Standards and approvals:	
Conformity marking	CE
Korea Certification	
UL 508	
BVS 15 ATEX E 098 X	II 3G Ex nA IIC T5 Gc,
	II 3D Ex tc IIIB T90°C Dc
IECEx BVS 15.0083X	Ex nA IIC T5 Gc,
	Ex tc IIIB T90°C Dc

Technical Data

Isolation:	
Channel – Channel	No
U_{LS}, U_A, system bus	500 V DC each
Configurable functions:	
Measuring range (per channel)	0-20 mA, 4-20 mA, ±20 mA, 0-10 V, ±10
	V, user-defined
Substitute value strategy (per channel)	Switch substitute value/hold last value
Substitute value (per channel)	0 mA bzw. 0 V / substitute value according
	to measuring range
Manual mode (per channel)	On/off
Manual mode value (per channel)	Value
Online simulation (per channel)	Lock/unlock; simulation value: (according
	to measuring range)
Online simulation (per channel/	
module)	Diagnostics
I/O diagnostics:	
I/O diagnostics (per channel)	Short circuit (voltage)
	wire break (current)
I/O diagnostics (per module)	Short circuit/overload (actuator supply)
	undervoltage (U_{LS} + U_A)
Process image:	
Process data width	8-byte data + status
LED indicators:	
SB: System bus status	LED (green/red/orange)
F: Error status	LED (red)
Ch1 ... Ch4 : Output signal status	LED (yellow)
Er1 ... Er4 : Output signal error	LED (red)
U_{LS} + U_A: Supply status	LED (green)
Indicators	Non-latching

General Specifications

Dimensions (mm) W x H x L	50 x 35.7 x 117
Weight	282 g

TTL Incremental/SSI Encoder Interface

Two encoder interfaces (2 x M12) + 4 digital inputs/outputs (2 x M12, two inputs/outputs per connector)

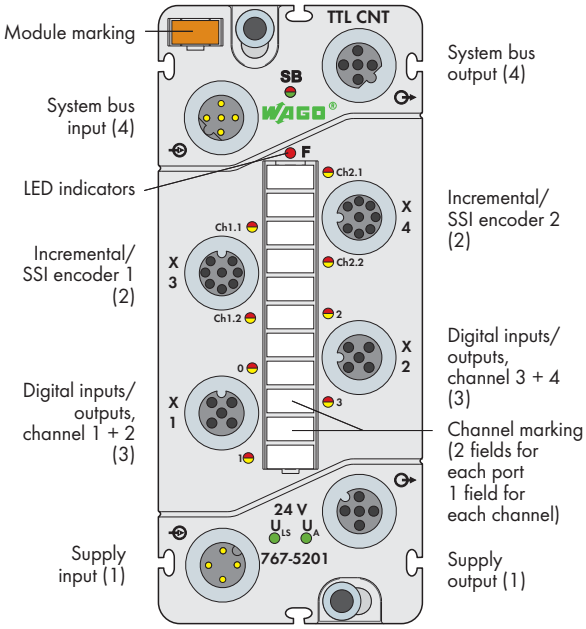

Short description:
The 767-5201 Module evaluates both incremental and absolute encoders with RS-422 signal levels. Integrated DIOs allow outputs to be directly set depending on counter states. Two of the four DIO channels can also be used as PWM outputs*.

Characteristics:
- Two incremental/SSI encoder interfaces
- Four digital inputs/outputs 24 VDC/0.1 A (incl. 2 PWM* outputs)
- Configurable (incremental/SSI encoder, DIOs)
- Diagnostic-capable (channel by channel/module by module)

Included:
- 1 x WMB marker, orange
- 1 x marking strip
- 2 x M12 protective cap

*Pulse-Width Modulated outputs

Description	Item No.	Pack. Unit
TTL Incremental/SSI Encoder	**767-5201**	1

Accessories	Item No.
Marking strips, marking pen, spacer module and protective caps	see pages 520 ... 521
IP67 cables and connectors	see pages 502 ... 517 + Section 11

Technical Data

Module supply:	
Connection type (1)	M12 connectors, A coded, 4 poles
Current carrying capacity of supply connections	max. 8 A (U_{LS}: 4 A, U_A: 4 A)
Supply voltage	
Logic and sensor voltage U_{LS}	24 V DC (-25 % ... +30 %)
Actuator voltage U_A	24 V DC (-25 % ...+30 %)
Supply current	
Logic and sensor current I_{LS}	typ. 50 mA
Actuator current I_A	typ. 25 mA + actuators (max. 800 mA)
Protection	Reverse voltage protection for U_{LS} + U_A
	Short-circuit protection for sensor/actuator supply

Technical Data

Incremental encoder:	
Number of inputs (incremental)	2
Connection type (2)	M12 connectors, A coded, 8 poles, shielded
Sensor supply	5 V/24 V, max. 300 mA
Encoder connection (incremental)	A, A\, B, B\, C, C\
Signal input (incremental)	RS-422 differential signal
Counter	32 bits
Max. operating frequency	1 MHz
Zero impulse latch	32 bits
Type of cable, cable length	shielded, ≤ 30 m
SSI encoder:	
Number of inputs (SSI encoder)	2
Connection type (2)	M12 connectors, A coded, 8 poles, shielded
Sensor supply	5 V/24 V, max. 300 mA
Encoder connection (SSI)	D+, D-, CL+, CL-
Signal input (SSI encoder)	+D, -D: RS-422 differential signal
Signal output (SSI encoder)	CL+, CL-: RS-422 differential signal
Bit width	32 bits
Baud rate	62.5 kHz ... 2 MHz
Method of conversion	Binary/Gray
Type of cable, cable length	shielded, ≤ 30 m
Digital inputs:	
Number of inputs	4
Connection type (3)	M12 connectors, A coded, 5 poles, shielded
Wire connection	2- or 3-wire
Front-end cycle time (hardware)	max. 3 µs
Input characteristic	Type 3, acc. to IEC 61131-2
Signal voltage (0)	-3 V ... +5 V DC
Signal voltage (1)	+15 V ... +30 V DC

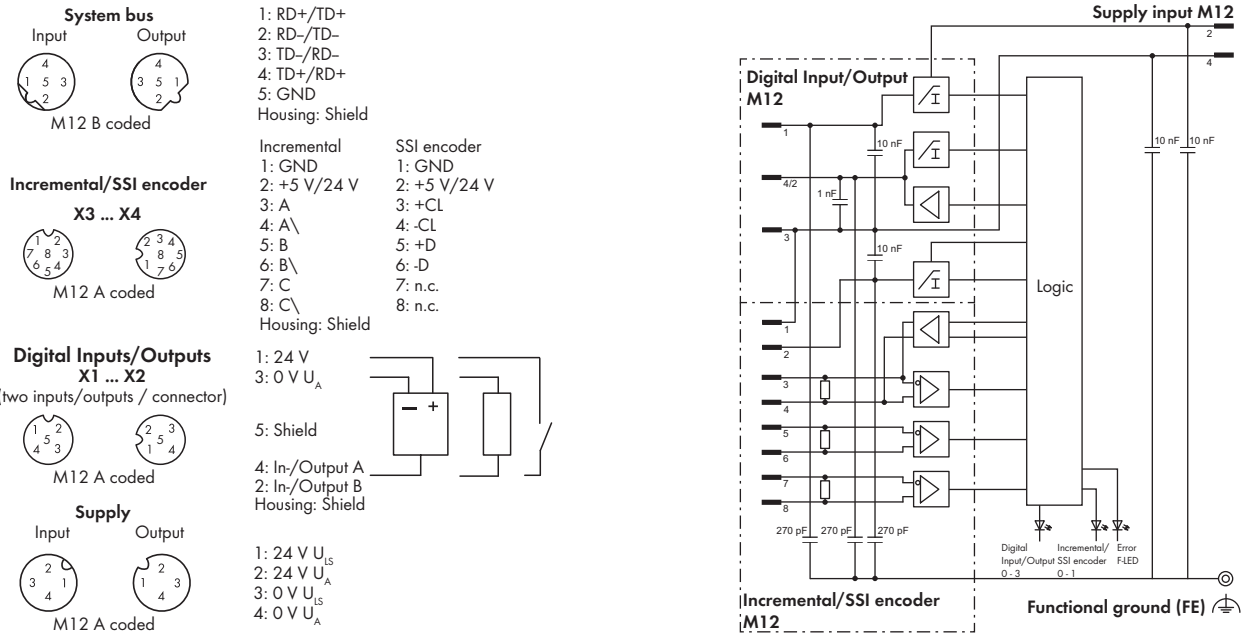

Technical Data

Digital inputs:	
Input wiring	High-side switching
Input voltage	24 VDC (-3 VDC < U_{IN} < +30 VDC)
Connection of 2-wire BEROs	max. 1.5 mA admissible closed current
Type of cable, cable length (digital inputs)	shielded, ≤ 30 m
Input characteristic:	
Input voltage	Typical input current
0 V	0 mA
5 V	2.0 mA
15 V	2.5 mA
24 V	2.9 mA
30 V	3.2 mA
Digital outputs (see manual for actuator selection information)	
No. of outputs	4
Connection type (3)	M12 connectors, A coded, 5 poles, shielded
Wire connection	2- or 3-wire
Output voltage	≤ U_A
Output current (channel/module)	0.1 A/0.4 A
Short-term output current, 1 s (channel)	0.2 A
Output protection	Short-circuit/overload protection, thermal shutdown
Response time	approx. 10 µs (output, 90 %)
Pulse width modulation (PWM)	
Pulse frequency	100 Hz ... 10 kHz
Pulse duty factor	0 ... 100 %
Resolution	16 bits (≤ 1 kHz), 12 bits (> 1 kHz)
Voltage drop against U_A	max. 1.7 V at 100 mA
Leakage current in OFF state	typ. 150 µA
Output circuit	push-pull
System bus:	
Connection type (4)	M12 connectors, B coded, 5 poles, shielded
Standards and approvals:	
Conformity marking	CE
UL 508	
BVS 15 ATEX E 098 X	II 3G Ex nA IIC T5 Gc, II 3D Ex tc IIIB T90°C Dc
IECEx BVS 15.0083X	Ex nA IIC T5 Gc, Ex tc IIIB T90°C Dc

Technical Data

Isolation:	
Channel – Channel	no
U_{LS}, U_A, system bus	500 V DC each
Configurable functions: (see manual for configuration details)	
Incremental encoder (channel by channel)	Evaluation, filter
SSI encoder (channel by channel)	Data width/length, transmission rate, etc.
Cam (channel-by-channel)	Upper/lower value, output, etc.
Pulse-width modulation (channel-by-channel)	Pulse duty factor, frequency, etc..
DIOs (channel by channel/module by module)	Operating mode, filter, substitute value strategy, etc.
Configurable functions (channel by channel/module by module)	Online simulation and diagnostics
I/O diagnostics:	
I/O diagnostics (per channel)	**Encoder:** Over-/underflow, wire break, limit value violation (min./max.); **DIO:** Overtemperature (actuators)
I/O diagnostics (per module)	**Supply:** Short-circuit/Overload of sensor/actuator supply, undervoltage (U_{LS} + U_A)
Process image:	
Process data width	2 x 4-byte encoder value, 2 x 2-byte control data, 1-byte status DI/control DO
Synchronous diagnostics (optional)	2 bytes
LED indicators:	
SB: System bus status	LED (green/red/orange)
F: Error status	LED (red)
0 – 3: Signal status, inputs/outputs	LED (yellow/red)
Ch1 + Ch2: Encoder status	LED (green/yellow/red)
U_{LS} + U_A: Supply status	LED (green)
Indicators	Non-latching

General Specifications

Dimensions (mm) W x H x L	50 x 35.7 x 117
Weight	270 g

HTL Incremental Encoder/Counter Interface

Two encoder/counter interfaces (2 x M12) + 4 digital inputs/outputs (2 x M12, two inputs/outputs per connector)

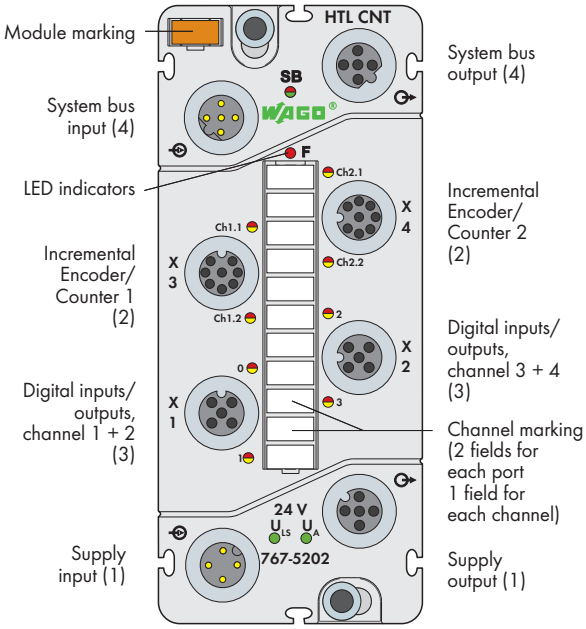

Short description:
The 767-5202 Module evaluates incremental encoders and counts binary signals with 24V signal levels. Integrated DIOs allow outputs to be directly set depending on counter states. Two of the four DIO channels can also be used as PWM outputs*.

Characteristics:
- Two incremental encoder/counter interfaces
- Four digital inputs/outputs 24 VDC/0.1 A (incl. 2 PWM outputs)
- Configurable (incremental encoder, counter, DIOs)
- Diagnostic-capable (channel by channel/module by module)

Included:
- 1 x WMB marker, orange
- 1 x marking strip
- 2 x M12 protective cap

*Pulse-Width Modulated outputs

Description	Item No.	Pack. Unit
HTL Incremental Encoder/Counter	**767-5202**	1

Accessories	Item No.
Marking strips, marking pen, spacer module and protective caps	see pages 520 ... 521
IP67 cables and connectors	see pages 502 ... 517 + Section 11

Technical Data

Module supply:	
Connection type (1)	M12 connectors, A coded, 4 poles
Current carrying capacity of supply connections	max. 8 A (U_{LS}: 4 A, U_A: 4 A)
Supply voltage	
Logic and sensor voltage U_{LS}	24 V DC (-25 % ... +30 %)
Actuator voltage U_A	24 V DC (-25 % ...+30 %)
Supply current	
Logic and sensor current I_{LS}	typ. 50 mA
Actuator current I_A	typ. 25 mA + actuators (max. 800 mA)
Protection	Reverse voltage protection for U_{LS} + U_A
	Short-circuit protection for sensor/actuator supply

Technical Data

Incremental encoder:	
Number of inputs (incremental)	2
Connection type (2)	M12 connectors, A coded, 8 poles, shielded
Sensor supply	5 V/24 V, max. 300 mA
Encoder connection (incremental)	A, A\, B, B\, C, C\
Signal input (incremental)	HTL, differential/single-ended
Counter	32 bits
Max. operating frequency	250 kHz
Zero impulse latch	32 bits
Type of cable, cable length	shielded, ≤ 30 m
Counters:	
Number of inputs (counter)	2
Connection type (2)	M12 connectors, A coded, 8 poles, shielded
Counter type	U/D counter (up/down pulse counting), peak-time counter (number of pulses per time unit), AB counter (A+B; A-B), frequency counter (input frequency, cycle duration), pulse width (pulse width ratio), pulse duration (time in µs)
Counter input	24 V DC
Power supply	max. 300 mA
Bit width	32 bits
Counter frequency	250 kHz
Digital inputs:	
Number of inputs	4
Connection type (3)	M12 connectors, A coded, 5 poles, shielded
Wire connection	2- or 3-wire

System bus

Input Output

M12 B coded

1: RD+/TD+
2: RD–/TD–
3: TD–/RD–
4: TD+/RD+
5: GND
Housing: Shield

HTL Incr. Enc./Counter

X3 ... X4

M12 A coded

HTL Incr. Enc.	Counter
1: GND	1: GND
2: +24 V	2: +24 V
3: A	3: Input A
4: A\	4: Input A\
5: B	5: Counter direction
6: B\	6: Counter direction\
7: C	7: n.c.
8: C\	8: n.c.
Housing: Shield	

Digital Inputs/Outputs

X1 ... X2

(two inputs/outputs / connector)

M12 A coded

1: 24 V
3: 0 V U_A

5: Shield

4: In-/Output A
2: In-/Output B
Housing: Shield

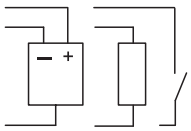

Supply

Input Output

M12 A coded

1: 24 V U_{LS}
2: 24 V U_A
3: 0 V U_{LS}
4: 0 V U_A

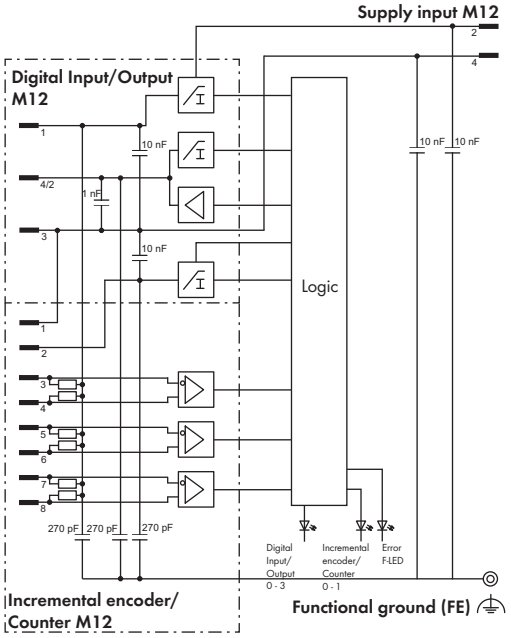

Technical Data

Digital inputs:	
Front-end cycle time (hardware)	max. 3 µs
Input characteristic	Type 3, acc. to IEC 61131-2
Signal voltage (0)	-3 V ... +5 V DC
Signal voltage (1)	+15 V ... +30 V DC
Input wiring	High-side switching
Input voltage	24 VDC (-3 VDC < U_{IN} < +30 VDC)
Connection of 2-wire BEROs	max. 1.5 mA admissible closed current
Type of cable, cable length (digital inputs)	shielded, ≤ 30 m
Input characteristic:	
Input voltage	Typical input current
0 V	0 mA
5 V	2.0 mA
15 V	2.5 mA
24 V	2.9 mA
30 V	3.2 mA
Digital outputs (see manual for actuator selection information)	
No. of outputs	4
Connection type (3)	M12 connectors, A coded, 5 poles, shielded
Wire connection	2- or 3-wire
Output voltage	≤ U_A
Output current (channel/module)	0.1 A/0.4 A
Short-term output current, 1 s (channel)	0.2 A
Output protection	Short-circuit/overload protection, thermal shutdown
Response time	approx. 10 µs (output, 90 %)
Pulse width modulation (PWM)	
Pulse frequency	100 Hz ... 10 kHz
Pulse duty factor	0 ... 100 %
Resolution	16 bits (≤ 1 kHz), 12 bits (> 1 kHz)
Voltage drop against U_A	max. 1.7 V at 100 mA
Leakage current in OFF state	typ. 150 µA
Output circuit	push-pull
System bus:	
Connection type (4)	M12 connectors, B coded, 5 poles, shielded
Standards and approvals:	
Conformity marking	CE
UL 508	

Technical Data

Standards and approvals:	
BVS 15 ATEX E 098 X	II 3G Ex nA IIC T5 Gc, II 3D Ex tc IIIB T90°C Dc
IECEx BVS 15.0083X	Ex nA IIC T5 Gc, Ex tc IIIB T90°C Dc
Isolation:	
Channel – Channel	no
U_{LS}, U_A, system bus	500 V DC each
Configurable functions: (see manual for configuration details)	
Incremental encoder (channel by channel)	Evaluation, filter
Counter (channel by channel)	Gate, direction, gate time, preset, etc.
Cam (channel-by-channel)	Upper/lower value, output, etc.
Pulse-width modulation (channel-by-channel)	Pulse duty factor, frequency, etc.
DIOs (channel by channel/module by module)	Operating mode, filter, substitute value strategy, etc.
Configurable functions (channel by channel/module by module)	Online simulation and diagnostics
I/O diagnostics:	
I/O diagnostics (per channel)	**Encoder:** Over-/underflow, wire break, limit value violation (min./max.); **DIO:** Overtemperature (actuators)
I/O diagnostics (per module)	**Supply:** Short-circuit/Overload of sensor/actuator supply, undervoltage (U_{LS} + U_A)
Process image:	
Process data width	2 x 4-byte encoder value, 2 x 2-byte control data, 1-byte status DI/control DO
Synchronous diagnostics (optional)	2 bytes
LED indicators:	
SB: System bus status	LED (green/red/orange)
F: Error status	LED (red)
0 – 3: Signal status, inputs/outputs	LED (yellow/red)
Ch1 + Ch2: Encoder status	LED (green/yellow/red)
U_{LS} + U_A: Supply status	LED (green)
Indicators	Non-latching

General Specifications

Dimensions (mm) W x H x L	50 x 35.7 x 117
Weight	270 g

Serial Interface (RS-232, RS-422/-485)

2 interfaces (2xM12) + 4 digital inputs/outputs (2xM12, two inputs/outputs per connector)

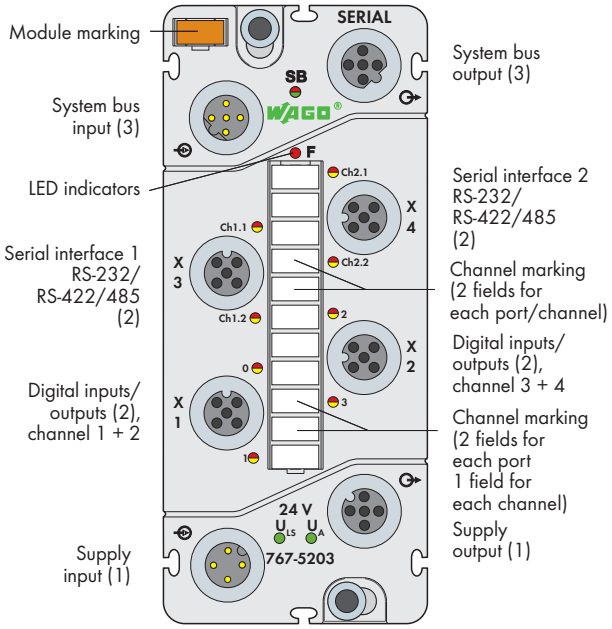

Short description:
The serial interface module controls/monitors devices (e.g., barcode readers, printers, scales, laser measurement systems, operator panels, transponders) and offers in addition digital inputs/outputs.

Characteristics:
- 2 serial interfaces (RS-232, RS-422/-485)
- 4 digital inputs/outputs, 24 VDC / 0.5 A
- Diagnostic capable (per channel/per module)
- Parametrizable (serial interface, operating mode, filter, inversion, substitute value strategy, manual mode, online simulation and diagnostics)

Included:
- 1 x WMB marker, orange
- 1 x marking strip
- 2 x M12 protective cap

Description	Item No.	Pack. Unit
Serial Interface (RS-232, RS-422/-485)	**767-5203**	1

Accessories	Item No.
Marking strips, marking pen, spacer module and protective caps	see pages 520 ... 521
IP67 cables and connectors	see pages 502 ... 517 + Section 11
RS-422/-485 Termination M12	**756-9218/050-000**

Technical Data

Module supply:	
Connection type (1)	M12 connectors, A coded, 4 poles;
	Derating must be observed
Current carrying capacity of supply	
connections	max. 8 A (U_{LS}: 4 A, U_A: 4 A)
Supply voltage	
Logic and sensor voltage U_{LS}	24 V DC (-25 % ... +30 %)
Actuator voltage U_A	24 V DC (-25 % ...+30 %)
Supply current	
Logic and sensor current I_{LS}	typ. 75 mA + sensors (max. 400 mA)
Actuator current I_A	typ. 25 mA + actuators 2.4 A (4 x 600 mA)
Protection	Reverse voltage protection for U_{LS} + U_A
	Short-circuit protection for sensor/actuator supply
Serial interface:	
Interfaces	2
Connection type (2)	M12 connectors, A-coded, 5 poles, shielded
Transmission channels	1 RxD / 1 TxD (full/half duplex)
Type of cable, cable length	15 m (RS-232); 1000 m (RS-422/-485)
Baud rate	300 – 115,200 baud
Buffer	4 KB (In); 4 KB (Out)

Technical Data

Digital inputs:	
Number of inputs	4
Connection type (2)	M12 connectors, A-coded, 5 poles, shielded
Wire connection	2- or 3-wire
Input filter	Hardware: ≤ 110 µs
	Software: parametrizable
Input characteristic	Type 2, acc. to IEC 61131-2
Signal voltage (0)	-3 V ... +5 V DC
Signal voltage (1)	+11 V ... U_A DC
Input wiring	High-side switching
Input voltage	24 VDC (-3 VDC < U_{IN} < +30 VDC);
	Power from U_A is strongly recommended,
	recovery for voltages > U_A
Input current (typ.)	7.3 mA
Connection of 2-wire BEROs	max. 1.5 mA admissible closed current
Cable length, unshielded	≤ 30 m
Wrong connection of inputs	No effect
Input characteristic:	
Input voltage	Typical input current
-3 V < U_{IN} < 0 V	0 mA
5 V	2.3 mA ... 2.5 mA
11 V	6.4 mA ... 6.7 mA
24 V < U_A < 31.2 V	7.3 mA ... 7.5 mA
Digital outputs:	
No. of outputs	4
Connection type (2)	M12 connectors, A-coded, 5 poles, shielded
Wire connection	2- or 3-wire
No. of outputs	4
Connection type (2)	M12 connectors, A-coded, 5 poles, shielded

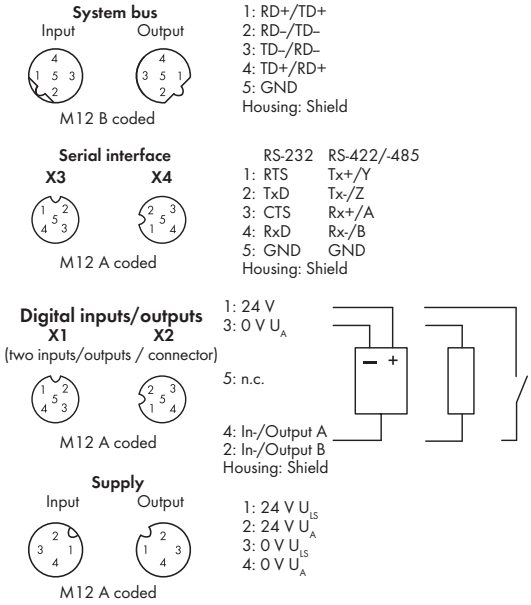

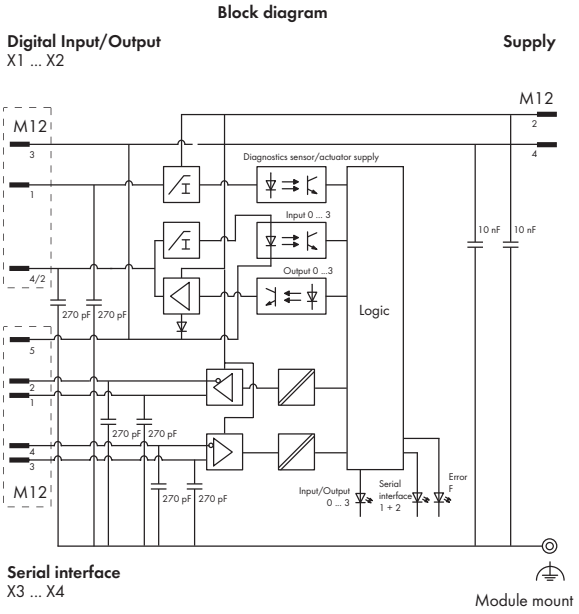

Technical Data

Digital outputs:	
Wire connection	2- or 3-wire
Output voltage	≤ U_A
Output current (per channel)	0.5 A (max. 0.6 A),
	short-circuit/overload proof
	(thermal disconnection)
Voltage drop against U_A at 500 mA	max. 0.2 V DC
Output current (module)	max. 2 A
Leakage current in OFF state	typ. 5 µA
Output circuit	High-side switching
Information on actuator selection:	
Delay time hardware from "0" to "1"	
(0 – 90%)	typ. 90 µs (resistive load)
Delay time hardware from "1" to "0"	
(0 – 90%)	typ. 310 µs (resistive load)
Rise time from "0" to "1"	typ. 60 µs (resistive load)
Fall time from "1" to "0"	typ. 45 µs (resistive load)
Reverse current (in case of recovery for	
voltages > U_A)	≤ 1 A (error: 1 channel)
Type of load	Inductive, resistive loads and lamps
Switching frequency	Inductive load approx. 20 Hz
	Resistive load approx. 500 Hz
	Lamp load approx. 500 Hz
Parallel connection of 2 outputs	for power boost
	for redundant actuation of a load
Type of protective circuit	External protection (e.g., recovery diodes)
Output resistance	< 0.4 Ω
Operating state influence on output:	
PLC CPU stop	Acc. to substitute value strategy
Fieldbus disruption	Acc. to substitute value strategy
S-bus (system bus) disruption	0 V status
Supply voltage under rated voltage	
tolerance	0 V status
Interruption of supply voltage	0 V status
Output operation	Non-latching
Overload behavior	Automatic restart
System bus:	
Connection type (3)	M12 connectors, B coded, 5 poles,
	shielded
Standards and approvals:	
Conformity marking	CE
Korea Certification	

Technical Data

Standards and approvals:	
UL 508	
BVS 15 ATEX E 098 X	II 3G Ex nA IIC T5 Gc,
	II 3D Ex tc IIIB T90°C Dc
IECEx BVS 15.0083X	Ex nA IIC T5 Gc,
	Ex tc IIIB T90°C Dc
Isolation:	
Channel – Channel	no
U_{LS}, U_A, system bus	500 V DC each
Parameterizable functions, serial interface:	
Operating mode (per channel)	RS-232; RS-422/-485
Baud rate (per channel)	300 – 115,700 baud
Data bits (per channel)	7/8
Parity	None/Even/Odd
Stop bits	1/2
Flow-Control	None/Xon+Xoff/RTS+CTS
Parameterizable functions, digital inputs/outputs	
Operating mode, input filter, inversion,	
substitute value strategy, manual mode,	
online simulation and diagnostics	For details, see manual.
I/O diagnostics:	
I/O diagnostics (per channel)	Overtemperature
I/O diagnostics (per module)	Sensor/Actuator supply short-circuit/
	overload
	Undervoltage (U_{LS} + U_A)
Process image:	
Process data width	Interface: 10 bytes (data in/out + status);
	DIO: 1-byte data in/out + 1-byte status
LED indicators:	
SB: System bus status	LED (green/red/orange)
F: Error status	LED (red)
0 – 3: Signal status, inputs/outputs	LED (yellow/red)
Ch1.1 + Ch2.1: Transmission status	LED (yellow/red)
Ch1.2 + Ch2.2: Reception status	LED (yellow/red)
U_{LS} + U_A: Supply status	LED (green)
Indicators	Non-latching

General Specifications

Dimensions (mm) W x H x L	50 x 35.7 x 117
Weight	260 g

MOVILINK® Interface (RS-232, RS-485)

2 interfaces (2 x M12) + 4 digital inputs/outputs (2 x M12, two inputs/outputs per connector)

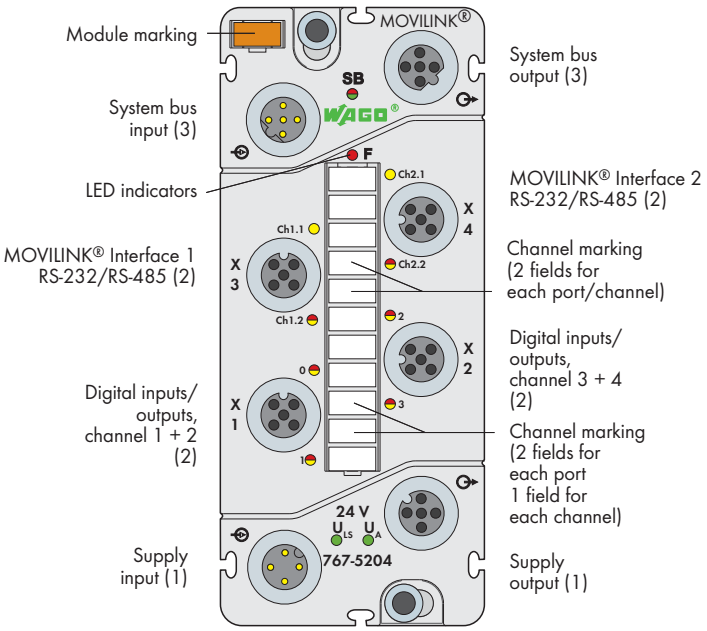

Short description:
Interface module for drive control via MOVILINK® protocol (see note). The maximum number of drives per interface depends on the type of application and is described in more detail in the manual.

Features:
- 2 MOVILINK® interfaces (RS-232, RS-485)
- 4 digital inputs/outputs, 24 VDC / 0.5 A
- Diagnostic-capable (channel by channel/module by module)
- Parametrizable (operating mode, baud rate, filter, inversion, substitute value strategy, substitute value, manual mode, online simulation and diagnostics)

Included:
- 1 x WMB marker, orange
- 1 x marking strip
- 2 x M12 protective cap

Note
MOVILINK® is a registered trademark of SEW-EURODRIVE GmbH & Co. KG

Description	Item No.	Pack. Unit
MOVILINK® Interface (RS-232, RS-485)	**767-5204**	1

Accessories	Item No.
Marking strips, marking pen, spacer module and protective caps	see pages 520 ... 521
IP67 cables and connectors	see pages 502 ... 517 + Section 11
RS-422/-485 Termination M12	**756-9218/050-000**

Technical Data	
Module supply:	
Connection type (1)	M12 connectors, A coded, 4 poles;
	Derating must be observed
Current carrying capacity of supply	
connections	max. 8 A (U_{LS}: 4 A, U_A: 4 A)
Supply voltage	
Logic and sensor voltage U_{LS}	24 V DC (-25 % ... +30 %)
Actuator voltage U_A	24 V DC (-25 % ...+30 %)
Supply current	
Logic and sensor current I_{LS}	typ. 75mA
Actuator current I_A	typ. 25 mA + Sensors (max. 400 mA) +
	Actuators 2.4 A (4 x 600 mA)
Protection	Reverse voltage protection for U_{LS} + U_A
	Short-circuit protection for sensor/actuator
	supply
MOVILINK® Interface	
Interfaces	2
Connection type (2)	M12 connectors, A coded, 5 poles,
	shielded
Transmission channels	1 RxD / 1 TxD (half duplex)
Cable length	max. 15 m (RS-232);
	max. 200 m (RS-485)

Technical Data	
MOVILINK® Interface	
Baud rate	9,600 Baud; 57,600 Baud
Protocols	MOVILINK® PDU types, 0x05 (cyclic)
	and 0x85 (acyclic)
Data bits (per channel)	8
Parity	Even
Stop bits	1
Digital inputs:	
Number of inputs	4
Connection type (2)	M12 connectors, A coded, 5 poles,
	shielded
Wire connection	2- or 3-wire
Input filter	Hardware: ≤ 110 µs
	Software: parametrizable
Input characteristic	Type 2, acc. to IEC 61131-2
Signal voltage (0)	-3 ... +5 VDC
Signal voltage (1)	+ 11 VDC ... U_A
Input wiring	High-side switching
Input voltage	24 VDC (-3 VDC < U_{IN} < +30 VDC); Power
	from U_A is strongly recommended, recovery
	for voltages > U_A
Input current (typ.)	7.3 mA
Connection of 2-wire BEROs	max. 1.5 mA admissible closed current
Cable length, unshielded	≤ 30 m
Wrong connection of inputs	No effect
Input characteristic:	
Input voltage	Typical input current
-3 V < U_{IN} < 0 V	0 mA
5 V	2.3 mA ... 2.5 mA
11 V	6.4 mA ... 6.7 mA
24 V < U_A < 31.2 V	7.3 mA ... 7.5 mA

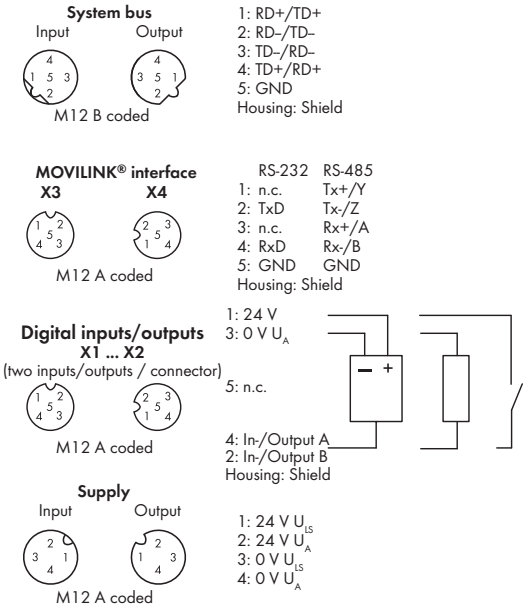

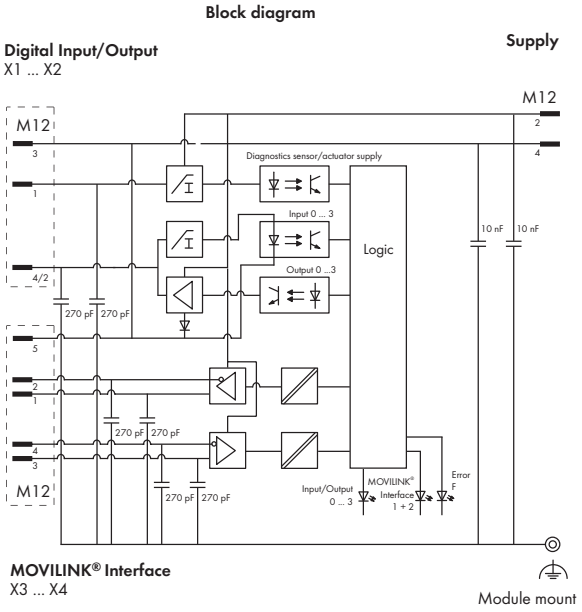

Technical Data

Digital outputs:	
No. of outputs	4
Connection type (2)	M12 connectors, A coded, 5 poles, shielded
Wire connection	2- or 3-wire
Output voltage	≤ U_A
Output current (per channel)	0.5 A (max. 0.6 A), short-circuit/overload proof (thermal disconnection)
Voltage drop against U_A at 500 mA	max. 0.2 V DC
Output current (module)	max. 2 A
Leakage current in OFF state	typ. 5 µA
Output circuit	High-side switching
Information on actuator selection:	
Delay time hardware from "0" to "1" (0 – 90%)	typ. 90 µs (resistive load)
Delay time hardware from "1" to "0" (0 – 90%)	typ. 310 µs (resistive load)
Rise time from "0" to "1"	typ. 60 µs (resistive load)
Fall time from "1" to "0"	typ. 45 µs (resistive load)
Cable length	≤ 30 m
Reverse current (in case of recovery for voltages > U_A)	≤ 1 A (error: 1 channel)
Type of load	Inductive, resistive loads and lamps
Switching frequency	Inductive load approx. 20 Hz
	Resistive load approx. 500 Hz
	Lamp load approx. 500 Hz
Parallel connection of 2 outputs	for power boost
	for redundant actuation of a load
Type of protective circuit	External protection (e.g., recovery diodes)
Output resistance	< 0,4 Ω
Operating state influence on output:	
PLC CPU stop	Acc. to substitute value strategy
Fieldbus disruption	Acc. to substitute value strategy
S-bus (system bus) disruption	0 V status
Supply voltage under rated voltage tolerance	0 V status
Interruption of supply voltage	0 V status
Output operation	Non-latching
Overload behavior	Automatic restart

Technical Data

System bus:	
Connection type (3)	M12 connectors, B coded, 5 poles, shielded
Standards and approvals:	
Conformity marking	CE
cULus UL 508	
BVS 15 ATEX E 098 X	II 3G Ex nA IIC T5 Gc, II 3D Ex tc IIIB T90°C Dc
IECEx BVS 15.0083X	Ex nA IIC T5 Gc, Ex tc IIIB T90°C Dc
Isolation:	
Channel – Channel	no
U_{LS}, U_A, system bus	500 V DC each
Parameterizable functions, MOVILINK® interface	
Operating mode (per module)	Easy Modus; Mailbox Modus
Type (per channel)	RS-232; RS-485
Baud rate (per channel)	9,600; 57,600 baud
Parameterizable functions, digital inputs/outputs	
Operating mode, input filter, inversion, substitute value strategy, manual mode, online simulation and diagnostics	For details, see manual.
I/O diagnostics:	
I/O diagnostics (per channel)	Overtemperature (DO)
I/O diagnostics (per module)	Sensor/Actuator supply short-circuit/overload
	Undervoltage (U_{LS} + U_A)
Process image:	
Process data width	Interface: 10-byte In/Out data; DIO: 1-byte In/Out data + 1-byte status
LED indicators:	
SB: System bus status	LED (green/red/orange)
F: Error status	LED (red)
0 – 3: Signal status, inputs/outputs	LED (yellow/red)
Ch1.1 + Ch2.1: Transmission status	LED (yellow)
Ch1.2 + Ch2.2: Reception status	LED (yellow/red)
U_{LS} + U_A: Supply status	LED (green)
Indicators	Non-latching

General Specifications

Dimensions (mm) W x H x L	35.7 x 50 x 117
Weight	260 g

Power Divider 24 V DC

6 outputs (6xM12)

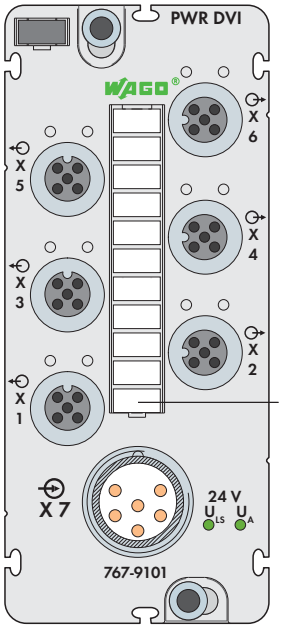

Short description:
Power divider for supplying SPEEDWAY modules distributed over a large network.

Included:
- Module WMB marker card, gray (1 pcs)
- Marker strips (1 pcs)
- M12 protective caps (2 pcs)

Description	Item No.	Pack. Unit
Power Divider	**767-9101**	1

Accessories	Item No.
Marking strips, marking pen, spacer module and protective caps	see pages 520 ... 521
IP67 cables and connectors	see pages 502 ... 517 + Section 11

Technical Data	
Module supply:	
Connection type (1)	M23 connector, 6 poles;
	Derating must be observed
Supply voltage	
Logic and sensor voltage U_{LS}	24 V DC (-25 % ... +30 %)
Actuator voltage U_A	24 V DC (-25 % ... +30 %)
Supply current	
Logic and sensor current I_{LS}	typ. 4 mA
Actuator current I_A	typ. 4mA
Supply outputs	
No. of outputs	6
Connection type (2)	M12 connectors, A coded, 4 poles;
	Derating must be observed
Current carrying capacity / connector	Max. 8 A (U_{LS}: 4 A, U_A: 4 A);
	Derating must be observed
Current carrying capacity / module	Max. 24 A
	(U_{LS} max. 8 A)
	(U_A max. 16 A);
	Derating must be observed
Short circuit protection	no
Isolation:	
U_{LS} - U_A	500 VDC
Standards and approvals:	
Conformity marking	CE
Korea Certification	
UL 508	

Supply outputs
X1 ... X6

M12 A coded

1: 24 V U_{LS}
2: 24 V U_A
3: 0 V U_{LS}
4: 0 V U_A
5: n.c.

Supply
Input

M23

1: 24 V U_{LS}
2: 0 V U_{LS}
3: n.c.
4: 24 V U_A
5: 0 V U_A
6: n.c.

Block diagram of power divider

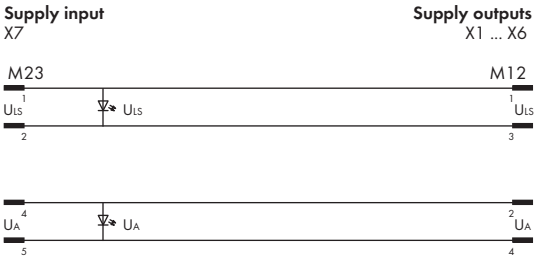

Technical Data

Technical Data

General Specifications

Dimensions (mm) W x H x L	50 x 43.3 x 117
Weight	276 g

WAGO-*SPEEDWAY 767*

S-BUS cable suitable for drag chains (system bus cable), assembled on one end

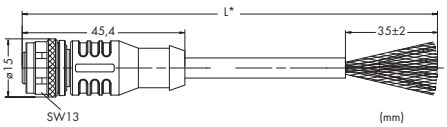

Pin 1 - 5: 0.14 mm²
1 red
2 black
3 blue
4 brown
5 yellow, green, orange, gray

M12 socket, straight, B coded, suitable for drag chains	Item No.	Pack. Unit
M12 socket, straight, one free cable end, 2.0 m	756-1501/060-020	1
M12 socket, straight, one free cable end, 5.0 m	756-1501/060-050	1
M12 socket, straight, one free cable end, 10.0 m	756-1501/060-100	1
M12 socket, straight, one free cable end, 20.0 m	756-1501/060-200	1

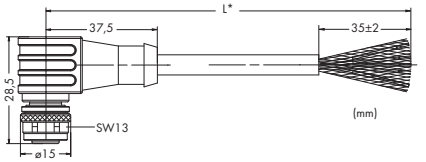

Pin 1 - 5: 0.14 mm²
1 red
2 black
3 blue
4 brown
5 yellow, green, orange, gray

M12 socket, right angle, B coded, suitable for drag chains	Item No.	Pack. Unit
M12 socket, right angle, one free cable end, 2.0 m	756-1502/060-020	1
M12 socket, right angle, one free cable end, 5.0 m	756-1502/060-050	1
M12 socket, right angle, one free cable end, 10.0 m	756-1502/060-100	1
M12 socket, right angle, one free cable end, 20.0 m	756-1502/060-200	1

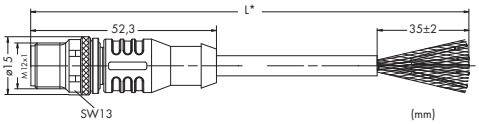

Pin 1 - 5: 0.14 mm²
1 red
2 black
3 blue
4 brown
5 yellow, green, orange, gray

M12 plug, straight, B coded, suitable for drag chains	Item No.	Pack. Unit
M12 plug, straight, one free cable end, 2.0 m	756-1503/060-020	1
M12 plug, straight, one free cable end, 5.0 m	756-1503/060-050	1
M12 plug, straight, one free cable end, 10.0 m	756-1503/060-100	1
M12 plug, straight, one free cable end, 20.0 m	756-1503/060-200	1

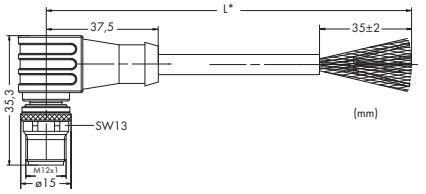

Pin 1 - 5: 0.14 mm²
1 red
2 black
3 blue
4 brown
5 yellow, green, orange, gray

M12 plug, right angle, B coded, suitable for drag chains	Item No.	Pack. Unit
M12 plug, right angle, one free cable end, 2.0 m	756-1504/060-020	1
M12 plug, right angle, one free cable end, 5.0 m	756-1504/060-050	1
M12 plug, right angle, one free cable end, 10.0 m	756-1504/060-100	1
M12 plug, right angle, one free cable end, 20.0 m	756-1504/060-200	1

* Cable length

WAGO-*SPEEDWAY 767*

S-BUS cables, with both ends of cable fitted and not fitted with connectors

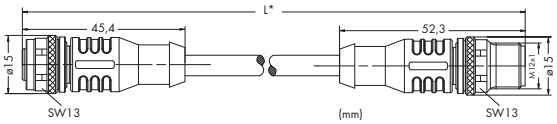

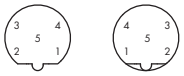

Pin 1 - 5: 0.14 mm²
1 red
2 black
3 blue
4 brown
5 yellow, green, orange, gray

M12 socket, straight / M12 plug, straight, B coded, suitable for drag chains	Item No.	Pack. Unit
M12 socket, straight, M12 plug, straight, 0.2 m	756-1505/060-002	1
M12 socket, straight, M12 plug, straight, 0.3 m	756-1505/060-003	1
M12 socket, straight, M12 plug, straight, 0.5 m	756-1505/060-005	1
M12 socket, straight, M12 plug, straight, 1.0 m	756-1505/060-010	1
M12 socket, straight, M12 plug, straight, 2.0 m	756-1505/060-020	1
M12 socket, straight, M12 plug, straight, 5.0 m	756-1505/060-050	1
M12 socket, straight, M12 plug, straight, 10.0 m	756-1505/060-100	1
M12 socket, straight, M12 plug, straight, 20.0 m	756-1505/060-200	1
M12 socket, straight, M12 plug, straight, 50.0 m	756-1505/060-500	1

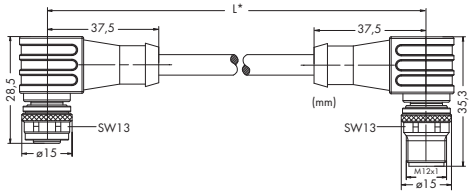

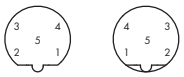

Pin 1 - 5: 0.14 mm²
1 red
2 black
3 blue
4 brown
5 yellow, green, orange, gray

M12 socket, right angle / M12 plug, right angle, B coded, suitable for drag chains	Item No.	Pack. Unit
M12 socket, right angle, M12 plug, right angle, 0.2 m	756-1506/060-002	1
M12 socket, right angle, M12 plug, right angle, 0.3 m	756-1506/060-003	1
M12 socket, right angle, M12 plug, right angle, 0.5 m	756-1506/060-005	1
M12 socket, right angle, M12 plug, right angle, 1.0 m	756-1506/060-010	1
M12 socket, right angle, M12 plug, right angle, 2.0 m	756-1506/060-020	1
M12 socket, right angle, M12 plug, right angle, 5.0 m	756-1506/060-050	1
M12 socket, right angle, M12 plug, right angle, 10.0 m	756-1506/060-100	1
M12 socket, right angle, M12 plug, right angle, 20.0 m	756-1506/060-200	1
M12 socket, right angle, M12 plug, right angle, 50.0 m	756-1506/060-500	1

* Cable length

S-Bus cable, not fitted with connectors, suitable for drag chains	Item No.	Pack. Unit
S-BUS cable, not fitted with connectors, 25.0 m	756-1500/000-250	1
S-BUS cable, not fitted with connectors, 50.0 m	756-1500/000-500	1
S-BUS cable, not fitted with connectors, 100.0 m	756-1500/000-1000	1

WAGO-*SPEEDWAY 767*

S-BUS cables, with one end of cable fitted

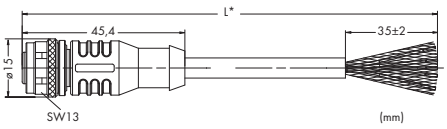

Pin 1 - 5: 0.14 mm²
1 white/blue
2 blue
3 white/orange
4 orange
5 white/green, green, white/brown, brown

M12 socket, straight, B coded	Item No.	Pack. Unit
M12 socket, straight, one free cable end, 2.0 m	756-1301/060-020	1
M12 socket, straight, one free cable end, 5.0 m	756-1301/060-050	1
M12 socket, straight, one free cable end, 10.0 m	756-1301/060-100	1
M12 socket, straight, one free cable end, 20.0 m	756-1301/060-200	1

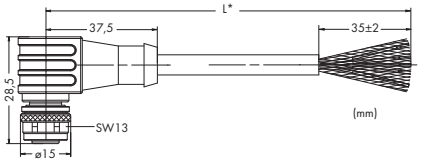

Pin 1 - 5: 0.14 mm²
1 white/blue
2 blue
3 white/orange
4 orange
5 white/green, green, white/brown, brown

M12 socket, right angle, B coded	Item No.	Pack. Unit
M12 socket, right angle, one free cable end, 2.0 m	756-1302/060-020	1
M12 socket, right angle, one free cable end, 5.0 m	756-1302/060-050	1
M12 socket, right angle, one free cable end, 10.0 m	756-1302/060-100	1
M12 socket, right angle, one free cable end, 20.0 m	756-1302/060-200	1

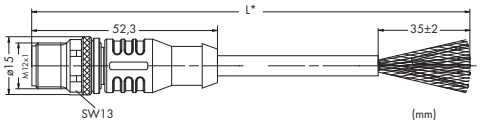

Pin 1 - 5: 0.14 mm²
1 white/blue
2 blue
3 white/orange
4 orange
5 white/green, green, white/brown, brown

M12 plug, straight, B coded	Item No.	Pack. Unit
M12 plug, straight, one free cable end, 2.0 m	756-1303/060-020	1
M12 socket, straight, one free cable end, 5.0 m	756-1303/060-050	1
M12 plug, straight, one free cable end, 10.0 m	756-1303/060-100	1
M12 plug, straight, one free cable end, 20.0 m	756-1303/060-200	1

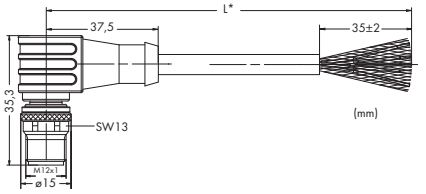

Pin 1 - 5: 0.14 mm²
1 white/blue
2 blue
3 white/orange
4 orange
5 white/green, green, white/brown, brown

M12 plug, right angle, B coded	Item No.	Pack. Unit
M12 plug, right angle, one free cable end, 2.0 m	756-1304/060-020	1
M12 plug, right angle, one free cable end, 5.0 m	756-1304/060-050	1
M12 plug, right angle, one free cable end, 10.0 m	756-1304/060-100	1
M12 plug, right angle, one free cable end, 20.0 m	756-1304/060-200	1

* Cable length

WAGO-*SPEEDWAY 767*

S-BUS cables, with both ends of cable fitted and not fitted with connectors

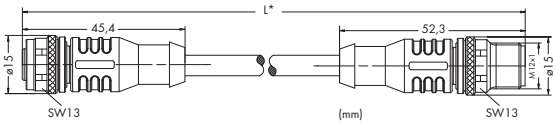

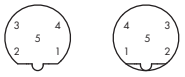

Pin 1 - 5: 0.14 mm²
1 white/blue
2 blue
3 white/orange
4 orange
5 white/green, green, white/brown, brown

M12 socket, straight / M12 plug, straight, B coded	Item No.	Pack. Unit
M12 socket, straight, M12 plug, straight, 0.2 m	756-1305/060-002	1
M12 socket, straight, M12 plug, straight, 0.3 m	756-1305/060-003	1
M12 socket, straight, M12 plug, straight, 0.5 m	756-1305/060-005	1
M12 socket, straight, M12 plug, straight, 1.0 m	756-1305/060-010	1
M12 socket, straight, M12 plug, straight, 2.0 m	756-1305/060-020	1
M12 socket, straight, M12 plug, straight, 3.0 m	756-1305/060-030	1
M12 socket, straight, M12 plug, straight, 5.0 m	756-1305/060-050	1
M12 socket, straight, M12 plug, straight, 7.0 m	756-1305/060-070	1
M12 socket, straight, M12 plug, straight, 10.0 m	756-1305/060-100	1
M12 socket, straight, M12 plug, straight, 20.0 m	756-1305/060-200	1
M12 socket, straight, M12 plug, straight, 50.0 m	756-1305/060-500	1

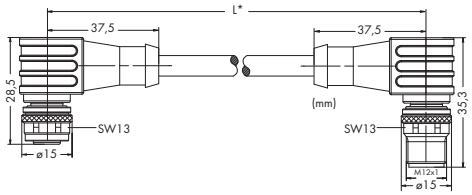

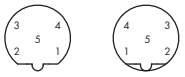

Pin 1 - 5: 0.14 mm²
1 white/blue
2 blue
3 white/orange
4 orange
5 white/green, green, white/brown, brown

M12-Buchse winklig / M12-Stecker winklig, B-kodiert	Item No.	Pack. Unit
M12 socket, right angle, M12 plug, right angle, 0.2 m	756-1306/060-002	1
M12 socket, right angle, M12 plug, right angle, 0.3 m	756-1306/060-003	1
M12 socket, right angle, M12 plug, right angle, 0.5 m	756-1306/060-005	1
M12 socket, right angle, M12 plug, right angle, 1.0 m	756-1306/060-010	1
M12 socket, right angle, M12 plug, right angle, 2.0 m	756-1306/060-020	1
M12 socket, right angle, M12 plug, right angle, 3.0 m	756-1306/060-030	1
M12 socket, right angle, M12 plug, right angle, 5.0 m	756-1306/060-050	1
M12 socket, right angle, M12 plug, right angle, 7.0 m	756-1306/060-070	1
M12 socket, right angle, M12 plug, right angle, 10.0 m	756-1306/060-100	1
M12 socket, right angle, M12 plug, right angle, 20.0 m	756-1306/060-200	1
M12 socket, right angle, M12 plug, right angle, 50.0 m	756-1306/060-500	1

* Cable length

S-Bus cable, not fitted with connectors	Item No.	Pack. Unit
S-BUS cable, not fitted with connectors, 25.0 m	756-1300/000-250	1
S-BUS cable, not fitted with connectors, 50.0 m	756-1300/000-500	1
S-BUS cable, not fitted with connectors, 100.0 m	756-1300/000-1000	1

WAGO-*SPEEDWAY 767*

Power supply cables, with one end of cable fitted

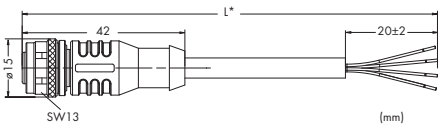

Pin 1 - 4: 0.75 mm²
1 brown
2 white
3 blue
4 black

M12 socket, straight, A coded	Item No.	Pack. Unit
M12 socket, straight, one free cable end, 2.0 m	756-3101/040-020	1
M12 socket, straight, one free cable end, 5.0 m	756-3101/040-050	1
M12 socket, straight, one free cable end, 10.0 m	756-3101/040-100	1
M12 socket, straight, one free cable end, 20.0 m	756-3101/040-200	1

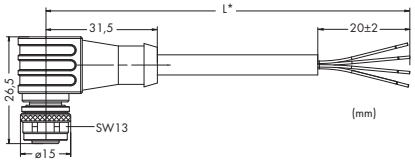

Pin 1 - 4: 0.75 mm²
1 brown
2 white
3 blue
4 black

M12 socket, right angle, A coded	Item No.	Pack. Unit
M12 socket, right angle, one free cable end, 2.0 m	756-3102/040-020	1
M12 socket, right angle, one free cable end, 5.0 m	756-3102/040-050	1
M12 socket, right angle, one free cable end, 10.0 m	756-3102/040-100	1
M12 socket, right angle, one free cable end, 20.0 m	756-3102/040-200	1

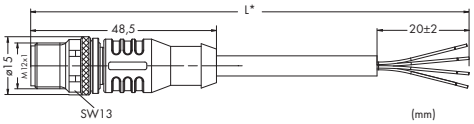

Pin 1 - 4: 0.75 mm²
1 brown
2 white
3 blue
4 black

M12 plug, straight, A coded	Item No.	Pack. Unit
M12 plug, straight, one free cable end, 2.0 m	756-3103/040-020	1
M12 plug, straight, one free cable end, 5.0 m	756-3103/040-050	1
M12 plug, straight, one free cable end, 10.0 m	756-3103/040-100	1
M12 plug, straight, one free cable end, 20.0 m	756-3103/040-200	1

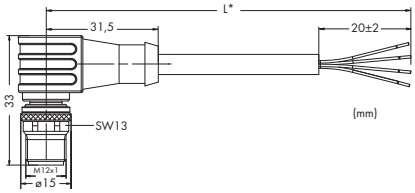

Pin 1 - 4: 0.75 mm²
1 brown
2 white
3 blue
4 black

M12 plug, right angle, A coded	Item No.	Pack. Unit
M12 plug, right angle, one free cable end, 2.0 m	756-3104/040-020	1
M12 plug, right angle, one free cable end, 5.0 m	756-3104/040-050	1
M12 plug, right angle, one free cable end, 10.0 m	756-3104/040-100	1
M12 plug, right angle, one free cable end, 20.0 m	756-3104/040-200	1

* Cable length

WAGO-*SPEEDWAY 767*

Power supply cables, with both ends fitted and not fitted with connectors

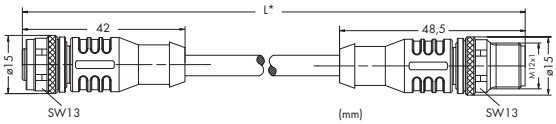

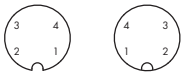

Pin 1 - 4: 0.75 mm²
1 brown
2 white
3 blue
4 black

M12 socket, straight / M12 plug, straight, A coded	Item No.	Pack. Unit
M12 socket, straight, M12 plug, straight, 0.2 m	756-3105/040-002	1
M12 socket, straight, M12 plug, straight, 0.3 m	756-3105/040-003	1
M12 socket, straight, M12 plug, straight, 0.5 m	756-3105/040-005	1
M12 socket, straight, M12 plug, straight, 1.0 m	756-3105/040-010	1
M12 socket, straight, M12 plug, straight, 2.0 m	756-3105/040-020	1
M12 socket, straight, M12 plug, straight, 3.0 m	756-3105/040-030	1
M12 socket, straight, M12 plug, straight, 5.0 m	756-3105/040-050	1
M12 socket, straight, M12 plug, straight, 7.0 m	756-3105/040-070	1
M12 socket, straight, M12 plug, straight, 10.0 m	756-3105/040-100	1
M12 socket, straight, M12 plug, straight, 20.0 m	756-3105/040-200	1

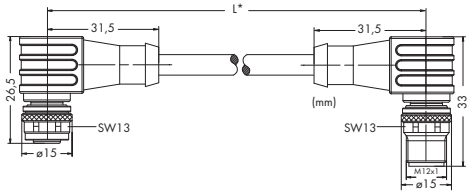

Pin 1 - 4: 0.75 mm²
1 brown
2 white
3 blue
4 black

M12 socket, right angle / M12 plug, right angle, A coded	Item No.	Pack. Unit
M12 socket, right angle, M12 plug, right angle, 0.2 m	756-3106/040-002	1
M12 socket, right angle, M12 plug, right angle, 0.3 m	756-3106/040-003	1
M12 socket, right angle, M12 plug, right angle, 0.5 m	756-3106/040-005	1
M12 socket, right angle, M12 plug, right angle, 1.0 m	756-3106/040-010	1
M12 socket, right angle, M12 plug, right angle, 2.0 m	756-3106/040-020	1
M12 socket, right angle, M12 plug, right angle, 3.0 m	756-3106/040-030	1
M12 socket, right angle, M12 plug, right angle, 5.0 m	756-3106/040-050	1
M12 socket, right angle, M12 plug, right angle, 7.0 m	756-3106/040-070	1
M12 socket, right angle, M12 plug, right angle, 10.0 m	756-3106/040-100	1
M12 socket, right angle, M12 plug, right angle, 20.0 m	756-3106/040-200	1

* Cable length

Power supply cable, not fitted with connectors	Item No.	Pack. Unit
Power supply cable, not fitted with connectors, 25.0 m	756-3100/000-250	1
Power supply cable, not fitted with connectors, 50.0 m	756-3100/000-500	1
Power supply cable, not fitted with connectors, 100.0 m	756-3100/000-1000	1

WAGO-*SPEEDWAY 767*

PROFIBUS cables, with one end of cable fitted

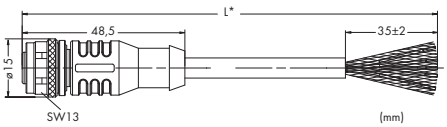

Pin 2 and 4: 0.34 mm²
1 n.c.
2 green
3 n.c.
4 red
5 n.c.

M12 socket, straight, B coded	Item No.	Pack. Unit
M12 socket, straight, one free cable end, 2.0 m	756-1101/060-020	1
M12 socket, straight, one free cable end, 5.0 m	756-1101/060-050	1
M12 socket, straight, one free cable end, 10.0 m	756-1101/060-100	1
M12 socket, straight, one free cable end, 20.0 m	756-1101/060-200	1

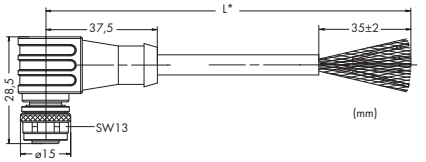

Pin 2 and 4: 0.34 mm²
1 n.c.
2 green
3 n.c.
4 red
5 n.c.

M12 socket, right angle, B coded	Item No.	Pack. Unit
M12 socket, right angle, one free cable end, 2.0 m	756-1102/060-020	1
M12 socket, right angle, one free cable end, 5.0 m	756-1102/060-050	1
M12 socket, right angle, one free cable end, 10.0 m	756-1102/060-100	1
M12 socket, right angle, one free cable end, 20.0 m	756-1102/060-200	1

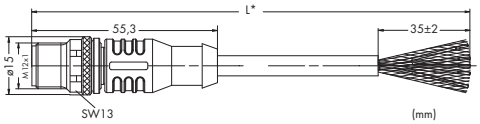

Pin 2 and 4: 0.34 mm²
1 n.c.
2 green
3 n.c.
4 red
5 n.c.

M12 plug, straight, B coded	Item No.	Pack. Unit
M12 plug, straight, one free cable end, 2.0 m	756-1103/060-020	1
M12 plug, straight, one free cable end, 5.0 m	756-1103/060-050	1
M12 plug, straight, one free cable end, 10.0 m	756-1103/060-100	1
M12 plug, straight, one free cable end, 20.0 m	756-1103/060-200	1

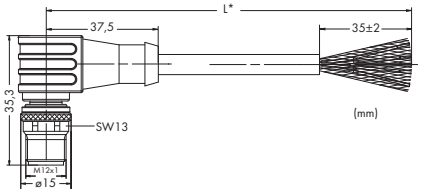

Pin 2 and 4: 0.34 mm²
1 n.c.
2 green
3 n.c.
4 red
5 n.c.

M12 plug, right angle, B coded	Item No.	Pack. Unit
M12 plug, right angle, one free cable end, 2.0 m	756-1104/060-020	1
M12 plug, right angle, one free cable end, 5.0 m	756-1104/060-050	1
M12 plug, right angle, one free cable end, 10.0 m	756-1104/060-100	1
M12 plug, right angle, one free cable end, 20.0 m	756-1104/060-200	1

* Cable length

WAGO-*SPEEDWAY 767*

PROFIBUS cables, with both ends of cable fitted

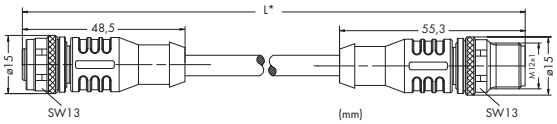

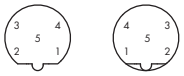

Pin 2 and 4: 0.34 mm²
1 n.c.
2 green
3 n.c.
4 red
5 n.c.

M12 socket, straight / M12 plug, straight, B coded	Item No.	Pack. Unit
M12 socket, straight, M12 plug, straight, 2.0 m	756-1105/060-020	1
M12 socket, straight, M12 plug, straight, 5.0 m	756-1105/060-050	1
M12 socket, straight, M12 plug, straight, 10.0 m	756-1105/060-100	1
M12 socket, straight, M12 plug, straight, 20.0 m	756-1105/060-200	1

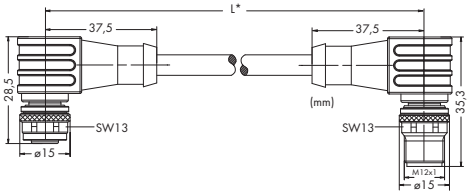

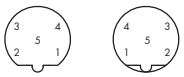

Pin 2 and 4: 0.34 mm²
1 n.c.
2 green
3 n.c.
4 red
5 n.c.

M12 socket, right angle / M12 plug, right angle, B coded	Item No.	Pack. Unit
M12 socket, right angle, M12 plug, right angle, 2.0 m	756-1106/060-020	1
M12 socket, right angle, M12 plug, right angle, 5.0 m	756-1106/060-050	1
M12 socket, right angle, M12 plug, right angle, 10.0 m	756-1106/060-100	1
M12 socket, right angle, M12 plug, right angle, 20.0 m	756-1106/060-200	1

* Cable length

WAGO-*SPEEDWAY 767*

ETHERNET, PROFINET cables, with one or both ends of cable fitted

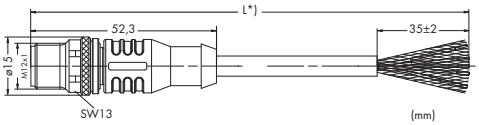

Pin 1 - 4: 0.34 mm²
1 yellow
2 white
3 orange
4 blue

M12 plug, straight, D coded	Item No.	Pack. Unit
M12 plug, straight, one free cable end, 2.0 m	756-1201/060-020	1
M12 plug, straight, one free cable end, 5.0 m	756-1201/060-050	1
M12 plug, straight, one free cable end, 10.0 m	756-1201/060-100	1
M12 plug, straight, one free cable end, 20.0 m	756-1201/060-200	1

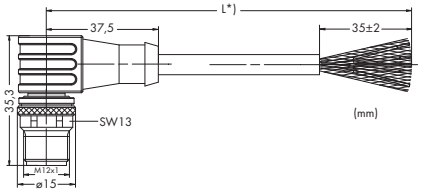

Pin 1 - 4: 0.34 mm²
1 yellow
2 white
3 orange
4 blue

M12 plug, right angle, D coded	Item No.	Pack. Unit
M12 plug, right angle, one free cable end, 2.0 m	756-1202/060-020	1
M12 plug, right angle, one free cable end, 5.0 m	756-1202/060-050	1
M12 plug, right angle, one free cable end, 10.0 m	756-1202/060-100	1
M12 plug, right angle, one free cable end, 20.0 m	756-1202/060-200	1

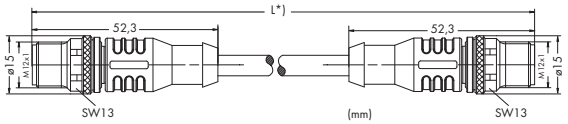

Pin 1 - 4: 0.34 mm²
1 yellow
2 white
3 orange
4 blue

M12 plug, straight / M12 plug, straight, D coded	Item No.	Pack. Unit
M12 plug, straight, M12 plug, straight, 2.0 m	756-1203/060-020	1
M12 plug, straight, M12 plug, straight, 5.0 m	756-1203/060-050	1
M12 plug, straight, M12 plug, straight, 10.0 m	756-1203/060-100	1
M12 plug, straight, M12 plug, straight, 20.0 m	756-1203/060-200	1

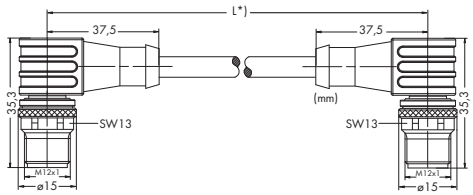

Pin 1 - 4: 0.34 mm²
1 yellow
2 white
3 orange
4 blue

M12 plug, right angle / M12 plug, right angle, D coded	Item No.	Pack. Unit
M12 plug, right angle, M12 plug, right angle, 2.0 m	756-1204/060-020	1
M12 plug, right angle, M12 plug, right angle, 5.0 m	756-1204/060-050	1
M12 plug, right angle, M12 plug, right angle, 10.0 m	756-1204/060-100	1
M12 plug, right angle, M12 plug, right angle, 20.0 m	756-1204/060-200	1

* Cable length

WAGO *SPEEDWAY 767*

sercos cabel, fitted at one or at both ends

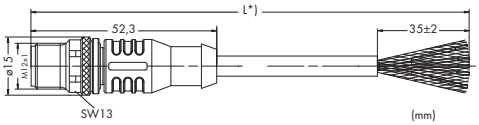

Pin 1 - 4: 0.34 mm²
1 yellow
2 white
3 orange
4 blue

M12 plug, straight, D coded	Item No.	Pack. Unit
M12 plug, straight, one free cable end, 2.0 m	756-1601/060-020	1
M12 plug, straight, one free cable end, 5.0 m	756-1601/060-050	1
M12 plug, straight, one free cable end, 10.0 m	756-1601/060-100	1
M12 plug, straight, one free cable end, 20.0 m	756-1601/060-200	1

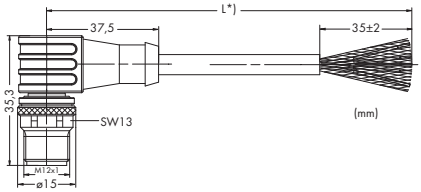

Pin 1 - 4: 0.34 mm²
1 yellow
2 white
3 orange
4 blue

M12 plug, right angle, D coded	Item No.	Pack. Unit
M12 plug, right angle, one free cable end, 2.0 m	756-1602/060-020	1
M12 plug, right angle, one free cable end, 5.0 m	756-1602/060-050	1
M12 plug, right angle, one free cable end, 10.0 m	756-1602/060-100	1
M12 plug, right angle, one free cable end, 20.0 m	756-1602/060-200	1

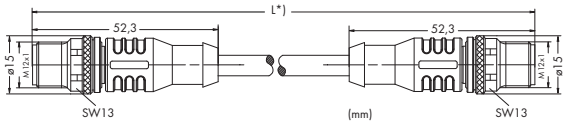

Pin 1 - 4: 0.34 mm²
1 yellow
2 white
3 orange
4 blue

M12 plug, straight / M12 plug, straight, D coded	Item No.	Pack. Unit
M12 plug, straight, M12 plug, straight, 2.0 m	756-1603/060-020	1
M12 plug, straight, M12 plug, straight, 5.0 m	756-1603/060-050	1
M12 plug, straight, M12 plug, straight, 10.0 m	756-1603/060-100	1
M12 plug, straight, M12 plug, straight, 20.0 m	756-1603/060-200	1

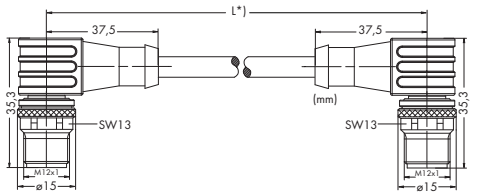

Pin 1 - 4: 0.34 mm²
1 yellow
2 white
3 orange
4 blue

M12 plug, right angle / M12 plug, right angle, D coded	Item No.	Pack. Unit
M12 plug, right angle, M12 plug, right angle, 2.0 m	756-1604/060-020	1
M12 plug, right angle, M12 plug, right angle, 5.0 m	756-1604/060-050	1
M12 plug, right angle, M12 plug, right angle, 10.0 m	756-1604/060-100	1
M12 plug, right angle, M12 plug, right angle, 20.0 m	756-1604/060-200	1

* Cable length

WAGO-*SPEEDWAY 767*

CANopen, DeviceNet cables, with one end of cable fitted

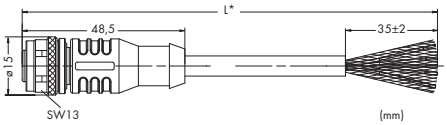

Pin 2 and 3: 0.38 mm²
Pin 4 and 5: 0.67 mm²
1 = Shield
2 = red
3 = black
4 = white
5 = blue

M12 socket, straight, A coded	Item No.	Pack. Unit
M12 socket, straight, one free cable end, 2.0 m	756-1401/060-020	1
M12 socket, straight, one free cable end, 5.0 m	756-1401/060-050	1
M12 socket, straight, one free cable end, 10.0 m	756-1401/060-100	1
M12 socket, straight, one free cable end, 20.0 m	756-1401/060-200	1

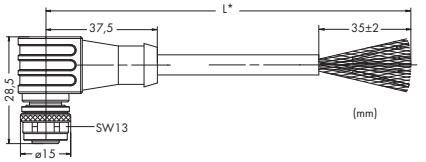

Pin 2 and 3: 0.38 mm²
Pin 4 and 5: 0.67 mm²
1 = Shield
2 = red
3 = black
4 = white
5 = blue

M12 socket, right angle, A coded	Item No.	Pack. Unit
M12 socket, right angle, one free cable end, 2.0 m	756-1402/060-020	1
M12 socket, right angle, one free cable end, 5.0 m	756-1402/060-050	1
M12 socket, right angle, one free cable end, 10.0 m	756-1402/060-100	1
M12 socket, right angle, one free cable end, 20.0 m	756-1402/060-200	1

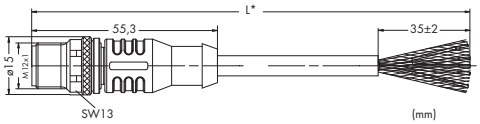

Pin 2 and 3: 0.38 mm²
Pin 4 and 5: 0.67 mm²
1 = Shield
2 = red
3 = black
4 = white
5 = blue

M12 plug, straight, A coded	Item No.	Pack. Unit
M12 plug, straight, one free cable end, 2.0 m	756-1403/060-020	1
M12 plug, straight, one free cable end, 5.0 m	756-1403/060-050	1
M12 plug, straight, one free cable end, 10.0 m	756-1403/060-100	1
M12 plug, straight, one free cable end, 20.0 m	756-1403/060-200	1

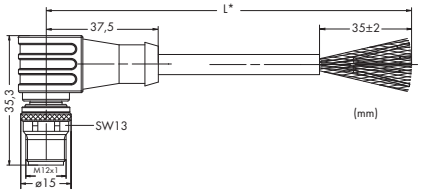

Pin 2 and 3: 0.38 mm²
Pin 4 and 5: 0.67 mm²
1 = Shield
2 = red
3 = black
4 = white
5 = blue

M12 plug, right angle, A coded	Item No.	Pack. Unit
M12 plug, right angle, one free cable end, 2.0 m	756-1404/060-020	1
M12 plug, right angle, one free cable end, 5.0 m	756-1404/060-050	1
M12 plug, right angle, one free cable end, 10.0 m	756-1404/060-100	1
M12 plug, right angle, one free cable end, 20.0 m	756-1404/060-200	1

* Cable length

WAGO-*SPEEDWAY 767*

CANopen, DeviceNet cables, with both ends of cable fitted

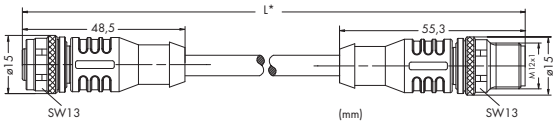

Pin 2 and 3: 0.38 mm²
Pin 4 and 5: 0.67 mm²
1 = Shield
2 = red
3 = black
4 = white
5 = blue

M12 socket, straight / M12 plug, straight, A coded	Item No.	Pack. Unit
M12 socket, straight, M12 plug, straight, 2.0 m	756-1405/060-020	1
M12 socket, straight, M12 plug, straight, 5.0 m	756-1405/060-050	1
M12 socket, straight, M12 plug, straight, 10.0 m	756-1405/060-100	1
M12 socket, straight, M12 plug, straight, 20.0 m	756-1405/060-200	1

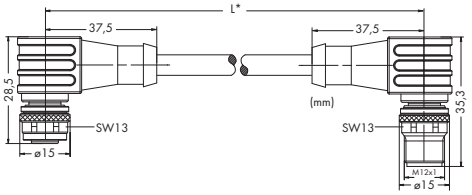

Pin 2 and 3: 0.38 mm²
Pin 4 and 5: 0.67 mm²
1 = Shield
2 = red
3 = black
4 = white
5 = blue

M12 socket, right angle / M12 plug, right angle, A coded	Item No.	Pack. Unit
M12 socket, right angle, M12 plug, right angle, 2.0 m	756-1406/060-020	1
M12 socket, right angle, M12 plug, right angle, 5.0 m	756-1406/060-050	1
M12 socket, right angle, M12 plug, right angle, 10.0 m	756-1406/060-100	1
M12 socket, right angle, M12 plug, right angle, 20.0 m	756-1406/060-200	1

* Cable length

WAGO-*SPEEDWAY* 767

Configurable shielded connectors

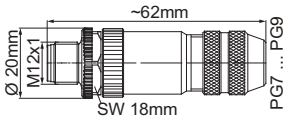

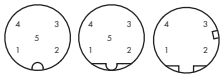

Conductor size
Ø 6 ... 8 mm
screw clamp connection:
0.14 ... 0.75 mm²
spring clamp connection:
0.14 ... 0.5 mm²

M12 plug, straight, shielded		Item No.	Pack. Unit
M12 plug, A coded, straight, spring clamp technology	CANopen/DeviceNet	**756-9207/060-000**	1
M12 plug, B coded, straight, spring clamp technology	PROFIBUS	**756-9401/060-000**	1
M12 plug, B coded, straight, screw clamp connection	PROFIBUS/S-Bus	**756-9411/060-000**	1
M12 plug, D coded, straight, spring clamp technology	ETHERNET/PROFINET	**756-9501/060-000**	1

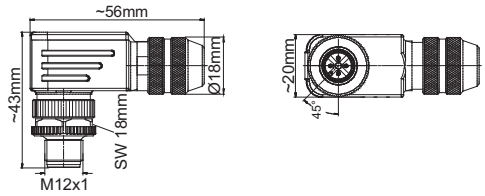

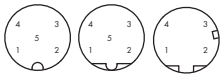

Conductor size
Ø 6 ... 8 mm
screw clamp connection:
0.14 ... 0.75 mm²
spring clamp connection:
0.14 ... 0.5 mm²

M12 plug, right angle, shielded		Item No.	Pack. Unit
M12 plug, A coded, right angle, spring clamp technology	CANopen/DeviceNet	**756-9211/060-000**	1
M12 plug, B coded, right angle, spring clamp technology	PROFIBUS	**756-9403/060-000**	1
M12 plug, B coded, right angle, screw clamp connection	PROFIBUS/S-Bus	**756-9413/060-000**	1
M12 plug, D coded, right angle, spring clamp technology	ETHERNET/PROFINET	**756-9501/040-000**	1

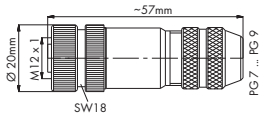

Conductor size
Ø 6 ... 8 mm
screw clamp connection:
0.14 ... 0.75 mm²
spring clamp connection:
0.14 ... 0.5 mm²

M12 socket, straight, shielded		Item No.	Pack. Unit
M12 socket, A coded, straight, spring clamp technology	CANopen/DeviceNet	**756-9208/060-000**	1
M12 socket, B coded, straight, spring clamp technology	PROFIBUS	**756-9402/060-000**	1
M12 socket, B coded, straight, screw clamp connection	PROFIBUS/S-Bus	**756-9412/060-000**	1

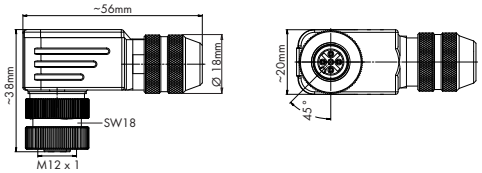

Conductor size
Ø 6 ... 8 mm
screw clamp connection:
0.14 ... 0.75 mm²
spring clamp connection:
0.14 ... 0.5 mm²

M12 socket, right angle, shielded		Item No.	Pack. Unit
M12 socket, A coded, right angle, spring clamp technology	CANopen/DeviceNet	**756-9210/060-000**	1
M12 socket, B coded, right angle, spring clamp technology	PROFIBUS	**756-9404/060-000**	1
M12 socket, B coded, right angle, screw clamp connection	PROFIBUS/S-Bus	**756-9414/060-000**	1

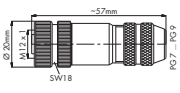

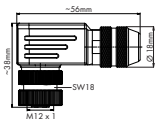

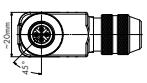

M12 socket

Conductor size
Ø 6 ... 8 mm/0.14 ... 0.50 mm²

M12 Plug, for self assembly		Item No.	Pack. Unit
M12 socket, straight, screw clamp connection	8-pole, shielded	**756-9211/090-000**	1
M12 socket, right angle, screw clamp connection		**756-9214/090-000**	1

WAGO-*SPEEDWAY 767*

Configurable connectors with PG9 thread

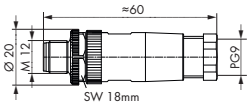

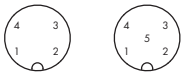

Conductor size
Ø 6 ... 8 mm
screw clamp connection:
0.25 ... 0.75 mm²
spring clamp connection:
0.14 ... 0.5 mm²

M12 plug, straight, A coded, unshielded			Item No.	Pack. Unit
M12 plug, straight, screw clamp connection PG9	4-pole	Supply	**756-9203/040-000**	5
M12 plug, straight, spring clamp technology PG9	5-pole	CANopen/DeviceNet	**756-9203/050-000**	5

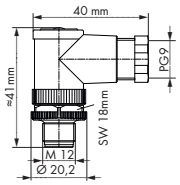

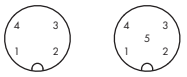

Conductor size
Ø 6 ... 8 mm
screw clamp connection:
0.25 ... 0.75 mm²
spring clamp connection:
0.14 ... 0.5 mm²

M12 plug, right angle, A coded, unshielded			Item No.	Pack. Unit
M12 plug, right angle, screw clamp connection PG9	4-pole	Supply	**756-9206/040-000**	5
M12 plug, right angle, spring clamp technology PG9	5-pole	CANopen/DeviceNet	**756-9206/050-000**	5

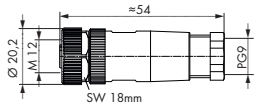

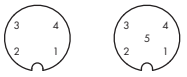

Conductor size
Ø 6 ... 8 mm
screw clamp connection:
0.25 ... 0.75 mm²
spring clamp connection:
0.14 ... 0.5 mm²

M12 socket, straight, A coded, unshielded			Item No.	Pack. Unit
M12 socket, straight, screw clamp connection PG9	4-pole	Supply	**756-9213/040-000**	5
M12 socket, straight, spring clamp technology PG9	5-pole	CANopen/DeviceNet	**756-9213/050-000**	5

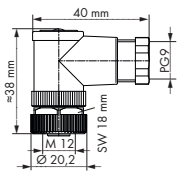

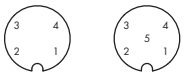

Conductor size
Ø 6 ... 8 mm
screw clamp connection:
0.25 ... 0.75 mm²
spring clamp connection:
0.14 ... 0.5 mm²

M12 socket, right angle, A coded, unshielded			Item No.	Pack. Unit
M12 socket, right angle, screw clamp connection PG9	4-pole	Supply	**756-9216/040-000**	5
M12 socket, right angle, spring clamp technology PG9	5-pole	CANopen/DeviceNet	**756-9216/050-000**	5

WAGO-*SPEEDWAY 767*

USB communication cable, terminating resistors

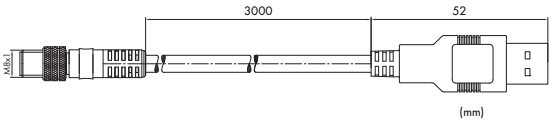

Pin 1 = red
Pin 2 = white
Pin 3 = green
Pin 4 = black

Description	Item No.	Pack. Unit
USB communication cable	756-4101/042-030	1

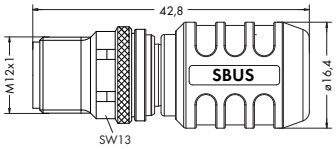

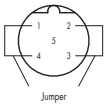

Description	Item No.	Pack. Unit
M12 system bus terminating plug, B coded, straight	756-9409/060-000	1

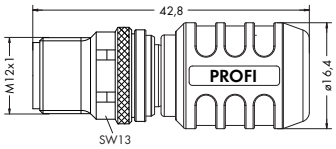

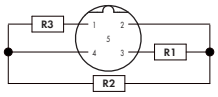

R3=390 Ω 0,4 W
R2=220 Ω 0,4 W
R1=390 Ω 0,4 W

Description	Item No.	Pack. Unit
M12 PROFIBUS terminating plug, B coded, straight	756-9405/060-000	1

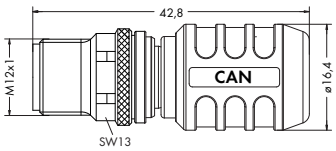

R1=120 Ω 0,25 W

Description	Item No.	Pack. Unit
M12 CANopen, DeviceNet terminating plug, A coded, straight	756-9209/060-000	1

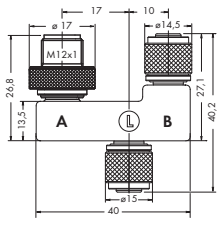

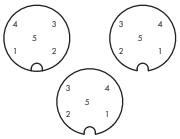

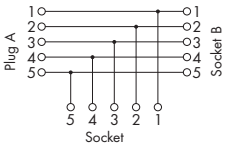

1 = Drain
2 = +24 V
3 = GND (0 V)
4 = CAN_H
5 = CAN_L

Description		Item No.	Pack. Unit
M12 DeviceNet drop T-piece	5-pole	756-9303/050-000	5

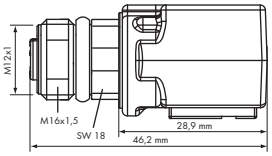

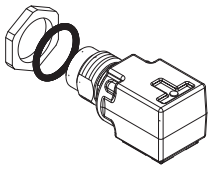

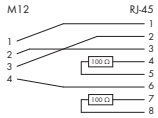

Description	Item No.	Pack. Unit
Adapter, right angle, M12 socket, D coded/RJ-45 socket (also ideally suited for control cabinet feed-through applications or connecting IP67/IP20 components)	**756-9503/040-000**	1

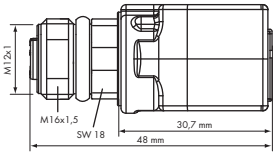

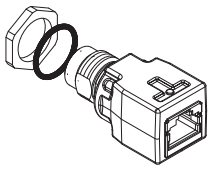

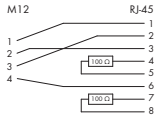

Description	Item No.	Pack. Unit
Adapter, straight, M12 socket, D coded/RJ-45 socket (also ideally suited for control cabinet feed-through applications) or connecting IP67/IP20 components)	**756-9504/040-000**	1

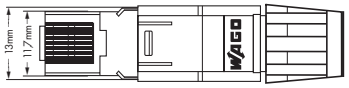

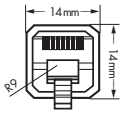

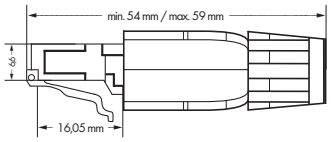

Description	Item No.	Pack. Unit
ETHERNET RJ-45 connector, IP20	**750-975**	1
PROFINET RJ-45 connector	**750-976**	1

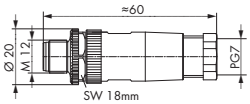

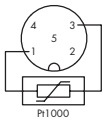

Conductor size
Ø 6 ... 8 mm / 0.14 - 0.5 mm²

Preassembled M12 plug, axial, A coded, unshielded			Item No.	Pack. Unit
Compensation connector, M12 plug, straight, spring clamp technology	5 poles	for 767-6403 Thermocoupler Module (Pt1000 sensor integrated)	**756-9207/050-000**	5

WAGO-*SPEEDWAY 767*

M12 termination and M23 configurable connectors

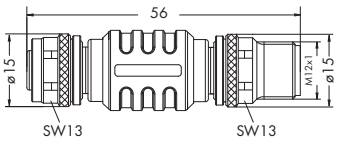

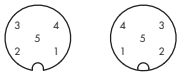

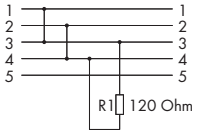

Description	Item No.	Pack. Unit
RS-422/-485 Termination M12	756-9218/050-000	1

Conductor size
Ø 6.5 ... 10.5 mm / max. 2.5 mm²

M23 plug, can be pre-assembled	Item No.	Pack. Unit
M23 plug, straight, soldering technology	756-9601/060-000	1
M23 plug, right angle, soldering technology	756-9602/060-000	1

Conductor size
Ø 6.5 ... 10.5 mm / max. 2.5 mm²

M23 socket, can be pre-assembled	Item No.	Pack. Unit
M23 socket, straight, soldering technology	756-9603/060-000	1
M23 socket, right angle, soldering technology	756-9604/060-000	1

M23

Description		Item No.	Pack. Unit
M23 assembly key	for easy installation	756-8201	1

Torque Wrench M8 and M12

Assembly kit

Description	Torque range	Material	Color	Standards/ specifications	Item No.	Pack. Unit
Torque Wrench M8 and M12	0.4 ... 1 Nm ±6 % (adjustable)	**Handle:** Polypropylene (PP) for hard zone, thermoplastic elastomers (TPE) for soft zone **Allen key:** Polyamide (PA), fiber-glass-reinforced; chromium-vanadium-molybdenum steel (CrMoV) (1.2381) **Adjustment tools:** Cellulose acetate; chromium-vanadium-molybdenum steel (CrMoV) (1.2381)	black	EN ISO 6789; BS EN 26789; ASME B107.14.M	**206-701**	1

Assembly kit for 756 Series IP67 cable assemblies and pluggable connectors with hex nut, consists of:

- Tool kit
- Torque screwdriver with adjustable torque (window scale)
- Adjustment tool for changing the torque
- Socket wrench SW9 (for M8 cable assemblies)
- Socket wrench SW13 (for M12 cable assemblies)

A torque specification of 0.6 Nm for M8 connectors and 1.0 Nm for M12 connectors is required for 756 Series cables and connectors.

WAGO-*SPEEDWAY 767*

General accessories and M12 panel feed-through connectors

Application examples: I/O module

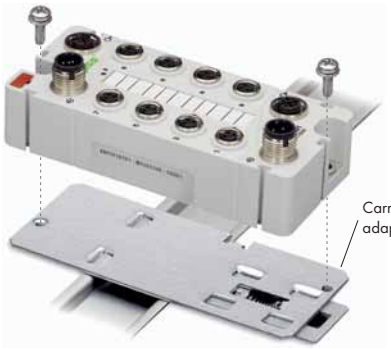

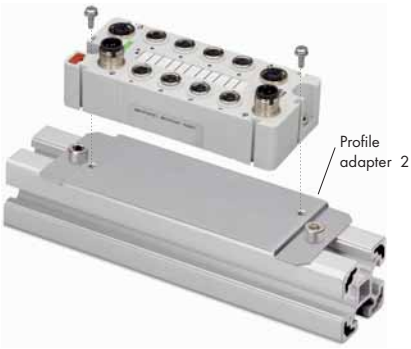

Carrier rail and profile adapters	Item No.	Pack. Unit
Carrier rail adapter 1 for couplers/progr. couplers	767-121	1
Carrier rail adapter 2 for I/O and power distribution modules	767-122	1
Carrier rail adapter for I/O module 8 x M12	767-125	1
Profile adapter 1 for couplers/progr. couplers	767-123	1
Profile adapter 2 for I/O and power distribution modules	767-124	1
Profile adapter for I/O module 8 x M12	767-126	1

M8

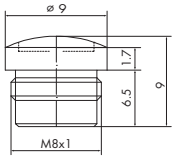

M12

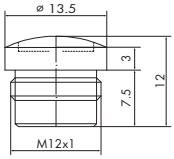

M12

M23

Protective caps (for covering unused sensor/actuator)		Item No.	Pack. Unit
M8 protective cap	for unused sockets	756-8101	10
M12 protective cap	for unused sockets	756-8102	10
M12 protective cap (fieldbus)	for unused plugs	756-8103	1
M23 protective cap (fieldbus/supply)	for unused plugs	756-8104	1

Locking clip (protects pre-assembled connectors from tool-free disconnection)	Item No.	Pack. Unit
Locking clip, M8	756-8301	10
Locking clip, M12	756-8302	10

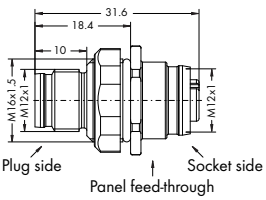

Description		Item No.	Pack. Unit
M12 panel feed-through connectors, A coded	M12 socket / M12 plug, A coded	756-9217/050-000	1
M12 panel feed-through connectors, B coded	M12 socket / M12 plug, B coded	756-9406/050-000	1

WAGO-*SPEEDWAY* 767

General accessories

Marking strip

Marking pen with fiber tip

Marking accessories		Item No.	Pack. Unit
Marking strip, 8xM8 (for couplers / I/O modules)		767-101	100
Marking strip, 4xM12 (for I/O modules)		767-102	100
Marking strip, for power distribution modules		767-103	100
Marking strip, 8 x M12		767-104	100
Marking strip, 9.9 mm wide, 50 m roll		757-901/000-050	1
Marking pen	for permanent marking	210-110	200

Spacer module

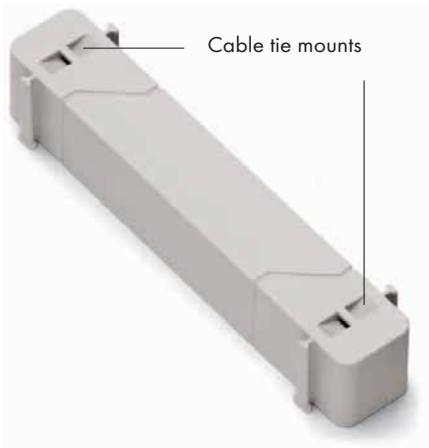

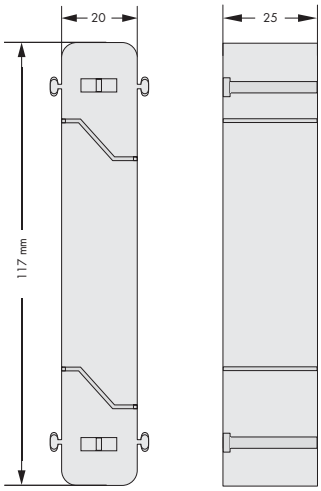

Description	Item No.	Pack. Unit
Spacer module	767-111	1

Industrial Switches

Industrial Switches

- Copper cables
- Fiber optic cable
- Ring redundancy

Industrial Switches

Contents

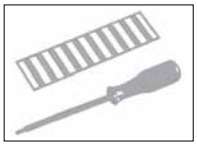

				Page
General Product Information				524
Interfaces and Configurations				525
Application and Installation Instructions				526
Versions				527
Item Number Keys				527
Standards and Rated Conditions				527
	No. of Ports	**Medium**	**Item No.**	
Industrial Switches	5	100Base-TX	852-101	528
	8	100Base-TX	852-102	529
	8/2	100Base-TX/100Base-FX	852-103	530
	7/2	100Base-TX/100Base-FX	852-104	531
Industrial ECO Switches	5	100Base-TX	852-111	532
	8	100Base-TX	852-112	533
	5	1000Base-T	852-1111	534
Accessories				
SPF modules, RJ-45 interface modules				536

Industrial Switches
General Product Information

Always the Right Solution

WAGO's range of switches ensures the scalability of your network infrastructure, while providing outstanding electrical and mechanical characteristics. These robust devices are designed for industrial use and they are fully compliant with IEEE 802.3, IEEE 802.3u, IEEE 802.3.

Combinable with Fiber Optic Conductors

ETHERNET via fiber-optic cables offers a multitude of advantages for industrial applications.
High immunity to interference, electrical isolation and long ranges up to 30 km are important parameters – and all are compatible with the IT world!

Scaled Offering

Unmanaged and managed switches in various designs are available for high-end applications. Our ECO switches are ideal for cost-sensitive applications that do not require technical features such as redundancy. They are ideally suited for small- to medium-sized networks.

Modular Expandability

Exchangeable SPF modules can be used to adapt WAGO switches for various fiber optic cables and the necessary distances and fibers.
There are SFP modules for multimode and single mode fiber optic cables for ranges up to 30 km. With the optimum combination of copper and fiber optic cables, you are equipped for a multitude of requirements.

Web-Based Management

WAGO's fully managed switches have integrated Web-based management. Any Web browser can be used to configure the switch.

Integrated Function Monitoring

For monitoring and error reporting, the managed switch has configurable functions such as e-mail alarm and SNMP traps. In addition, all switches except for ECO versions can monitor individual ports or the power supply via a potential-free alarm contact. A DIP switch is used to configure this function.

Availability, Redundancy

Select industrial switches have several options to build redundant network structures and to guarantee secure communication even when connections are faulty:

- "Spanning Tree" acc. to IEEE 802.1D compatible with IT standard
- Jetring – a simple ring protocol with a switching time of < 300 ms
- Xpress Ring – fast ring protocol switching time < 50 ms

In addition to redundancy of the communication link, a redundant power supply is integrated into the switches that can be monitored using an alarm relay. Thus, if the power supply fails, communication is not interrupted.

Different Operating Modes

The unmanaged switches are ideally suited for direct plug-and-play use. Managed switches are available for applications where IP filtering or further interpretation of telegrams is required for the application.

- Adaptable to different transmission media
- Automatic adaptation to
  - Speed (autonegotiation)
  - Wiring (auto-crossover, MDI/MDIX)
- Various switching modes
- Optional redundancy
- Larger supply voltage range

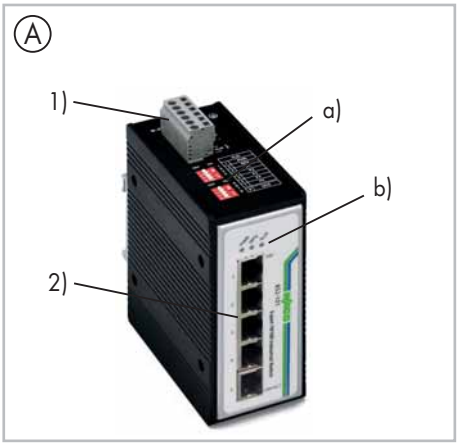

Power supply (1)
Technologically related differences on the connection level (2)

Housing design (A)
- DIP switch for configuration (a)
- Diagnostic LEDs (b)
- W x H* x L (mm) 50 x 120 x 105

Housing design (B)
- DIP switch for configuration (a)
- Diagnostic LEDs (b)
- W x H* x L (mm) 50 x 120 x 162

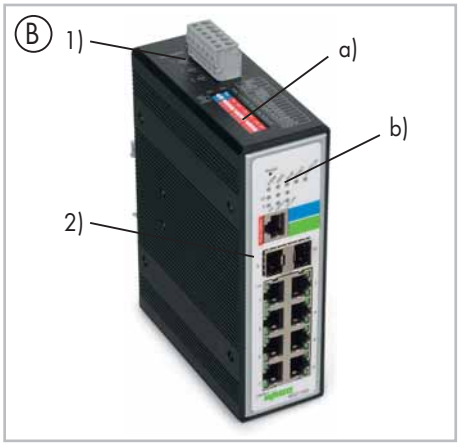

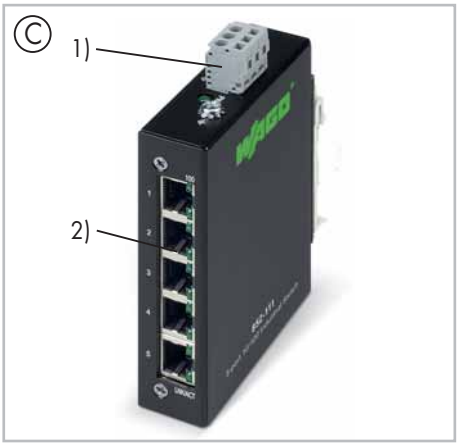

Housing design ECO (C)
- W x H* x L (mm) 23.4 x 73.8 x 109.2
- DIN-rail or wall mount

Housing design ECO (D)
- W x H* x L (mm) 109.2 x 23.4 x 73.8
- DIN-rail or wall mount

*Height from upper edge of DIN-rail

Housing design (E)
- SFP module for connecting fiber optic cables
- LC connection
- W x H x L (mm) 13.4 x 13.3 x 56.6

Increasing Availability through Media Redundancy

A primary reason for the success of ETHERNET communication in automation technology is that redundant mechanisms exist and uptime can be increased. This is accomplished by duplicating components and lines so that defects, such as a broken cable, no longer cause communication to fail. However, this requires complex algorithms that detect errors and determine alternative paths without causing loops or rings in the network – and this is performed with the shortest possible downtime. WAGO provides select switches with corresponding features.

Rapid Spanning Tree

- Is a standardized protocol for determining the shortest path
- Is used in any complex topologies to disable redundant paths
- Determines the best alternative paths during a connection interruption and activates the required paths
- Typically requires one to three seconds to switch

Jetring

- Is a simple protocol that can be used exclusively in physical ring topologies
- Requires no configuration
- Automatically assigns a switch as the "master"; disables those network connections that would lead to loop and automatically switches over in case of failure
- Typically requires approx. 300 ms to switch
- Can be operated in "Fast Aging Mode" in connection with specific ETHERNET controllers (e.g., 750-880) for fast switching

Xpress Ring

- Is only suitable for ring topologies like Jetring
- Requires that all nodes in the ring support the protocol
- Requires an explicit configuration of the connections
- Requires less than 50 ms to switch
- Is suitable as a protocol in redundant coupled ring systems (coupling ring)

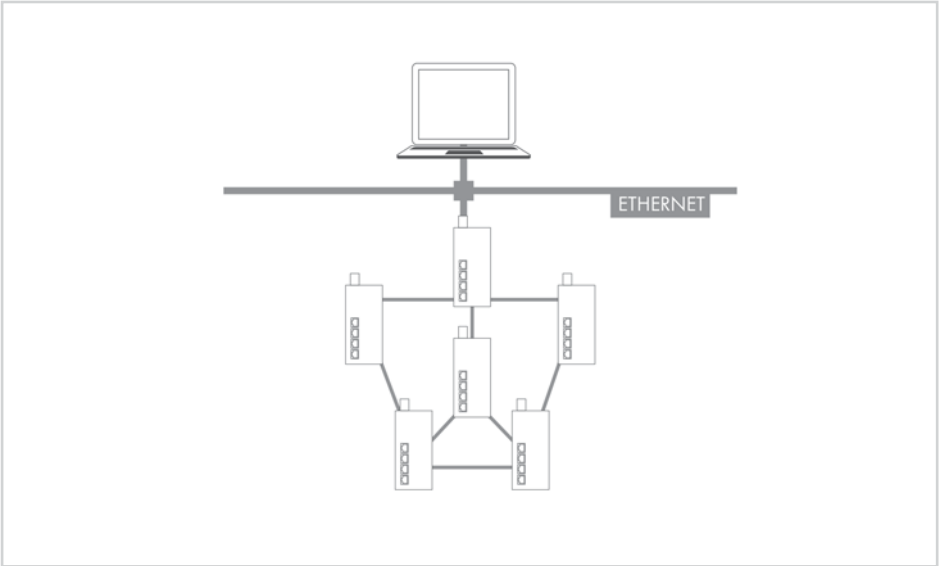

Example: Complex topology

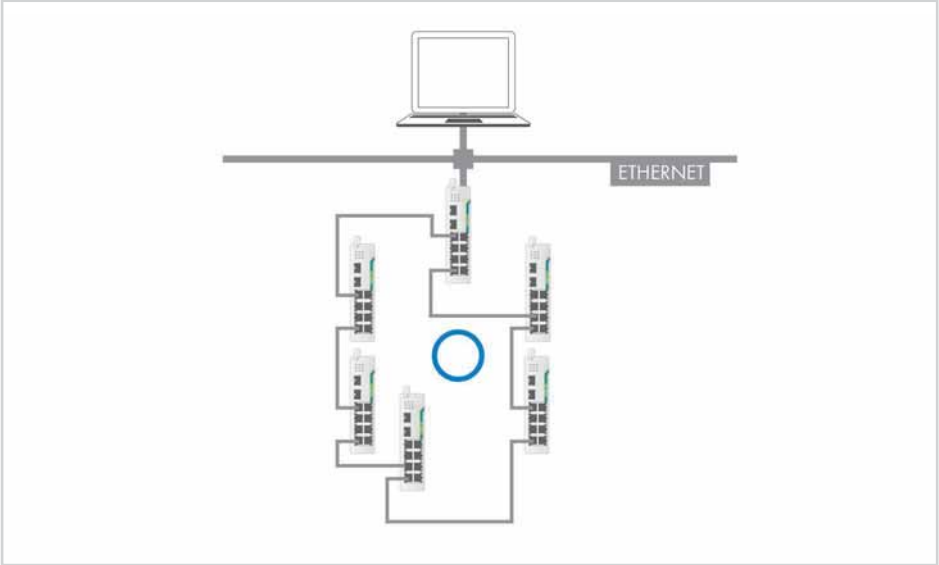

Example: Simple ring topology

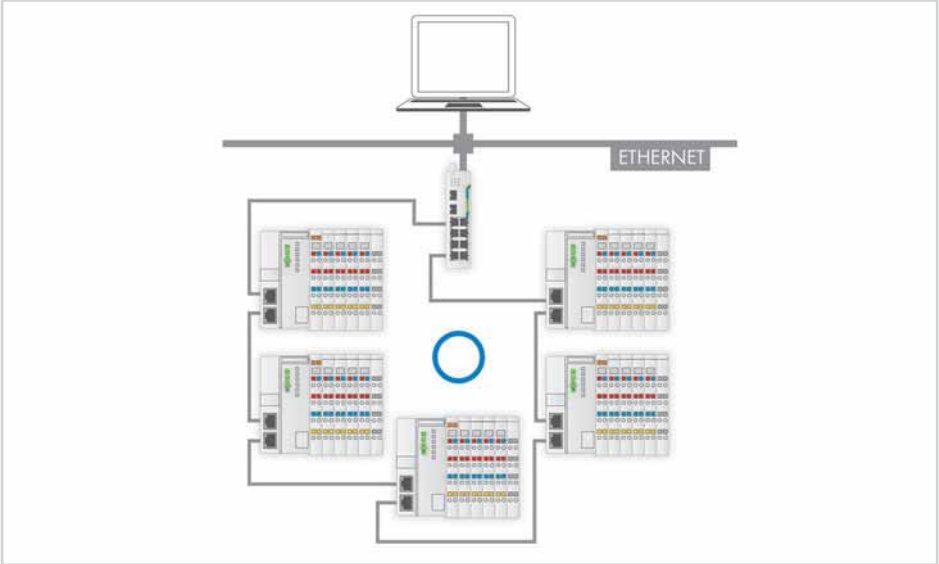

Example: Simple ring topology with 750-881 in "Fast Aging Mode"

Industrial Switches
Versions

Extended temperature range

Industrial automation technology is typically utilized in temperatures ranging from 0 °C to 55 °C. However, there are applications that require an extended temperature range. Selected switches and SFP modules are available for an extended temperature range of -40 °C to +70 °C.

Item Number Keys

Explanations of the components for the item number key

Series

Item No. : 852-xxxx

0xxx: 100 Mbit/s
1xxx: 1 Gbit/s
x1xx: Unmanaged switch
x2xx: SFP module
x3xx: Managed switch
x4xx: Unmanaged switch, PoE
x5xx: Managed switch, PoE
xx0x: Industrial switch (redundant power supply)
xx1x: Industrial ECO switch
xxx1: 5 ports
xxx2: 8 ports
xxx3: 8 ports + 2 LWL ports
xxx4: 7 ports + 2 LWL ports
xxx5: 8 ports + 4 LWL ports

Standards and Rated Conditions

General Specifications	
Operating voltage	9 VDC ... 48 VDC (ECO version 18 V ... 30 V)
Operating temperature	0 °C ... +60 °C
Operating temperature for versions with an extended temperature range	-40 °C ... +70 °C
Storage temperature	-20 °C ... +80 °C
Storage temperature for versions with an extended temperature range	-40 °C ... +85 °C
Relative humidity (without condensation)	95 %
Vibration resistance	4g acc. to IEC 60068-2-6
Shock resistance:	15g acc. to IEC 60068-2-27
EMC immunity to interference	EN 61000-6-2
EMC emission of interference	EN 61000-6-4
Protection type	IP30
Type of mounting	on DIN-rail, ECO version also for wall mounting
Mounting position	any

5-Port 100Base-TX Industrial Switch

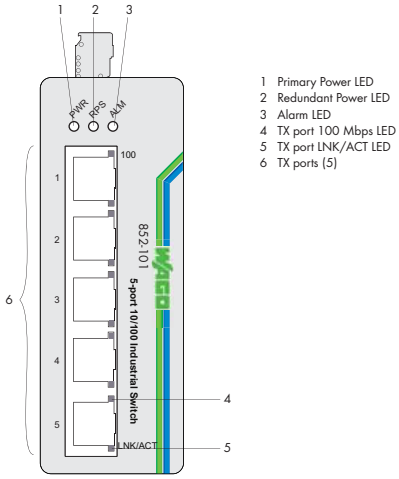

1 Primary Power LED
2 Redundant Power LED
3 Alarm LED
4 TX port 100 Mbps LED
5 TX port LNK/ACT LED
6 TX ports (5)

The 852-101 Industrial Switch is a 5-port 10/100Base-TX ETHERNET switch. The switch has a rugged housing, a redundant power supply and function monitoring with relay, making it ideal for a wide range of applications.

Features:

- Redundant DC power supply
- Wide supply voltage range: 9 V ... 48 V
- DIP switch enables alarm functions
- Full compliance with IEEE802.3, 802.3u stantards
- Non-blocking, store-and-forward switching
- Auto-negotiation on all 10/100Base-TX ports
- Auto-MDI/MDIX (crossover) on all 10/100Base-TX ports

Description	Item No.	Pack. Unit
5-Port 100Base-TX Industrial Switch	**852-101**	1

Approvals

Conformity marking	CE
Korea Certification	
UL 508	

Technical Data

Ports	5 x 10/100Base-TX (RJ-45)
Standards	IEEE 802.3u 100Base-TX;
	IEEE 802.3 10Base-T
Maximum length	10/100Base-TX: 100 m
Supply voltage	9 V ... 48 V DC (line length < 3 m)
Energy consumption max.	3.84 W
Energy consumption typ. (24 V)	3.36 W
Operating temperature	-40°C ... +70°C
Storage temperature	-40 °C ... +80 °C
Relative air humidity (no condensation)	95 %
Dimensions (mm) W x H x L	50 x 120 x 105
	Height from upper-edge of DIN 35 rail
Weight	639 g
Vibration resistance	acc. to IEC 60068-2-6
Shock resistance	acc. to IEC 60068-2-27
Degree of protection	IP30
EMC immunity of interference	acc. to EN 61000-6-2
EMC emission of interference	acc. to EN 61000-6-4

8-Port 100Base-TX Industrial Switch

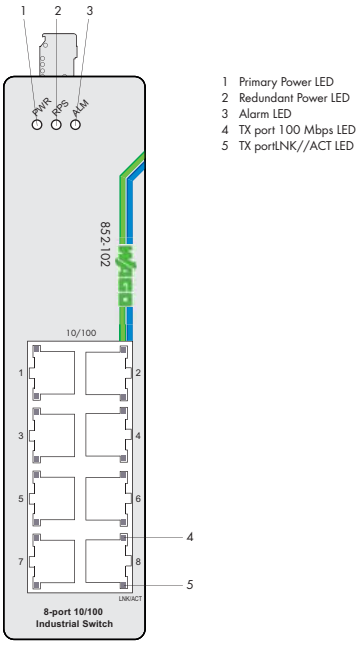

1 Primary Power LED
2 Redundant Power LED
3 Alarm LED
4 TX port 100 Mbps LED
5 TX portLNK//ACT LED

The 852-102 Industrial Switch is an 8-port 10/100Base-TX ETHERNET switch. The switch has a rugged housing, a redundant power supply and function monitoring with relay, making it ideal for a wide range of applications.

Features:

- Redundant DC power supply
- Large supply voltage range: 9 V ... 48 V
- DIP switch enables alarm functions
- Full compliance with IEEE802.3, 802.3u stantards
- Non-blocking, store-and-forward switching
- Auto-negotiation on all 10/100Base-TX ports
- Auto-MDI/MDIX (crossover) on all 10/100Base-TX ports

Description	Item No.	Pack. Unit
8-Port 100Base-TX Industrial Switch	**852-102**	1

Approvals

Conformity marking	CE
Korea Certification	
UL 508	

Technical Data

Ports	8 x 10/100Base-TX (RJ-45)
Standards	IEEE 802.3u 100Base-TX;
	IEEE 802.3 10Base-T
Throughputs	14,880/148,800 packets per second
	(pps) to 10/100 Mbps ports
Maximum length	10/100Base-TX: 100 m
Supply voltage	9 V ... 48 V DC (line length < 3 m)
Energy consumption max.	5.28 W
Energy consumption typ. (24 V)	4.56 W
Operating temperature	-40°C ... +70°C
Storage temperature	-40 °C ... +80 °C
Relative air humidity (no condensation)	95 %
Dimensions (mm) W x H x L	50 x 120 x 162
	Height from upper-edge of DIN 35 rail
Weight	909 g
Vibration resistance	acc. to IEC 60068-2-6
Shock resistance	acc. to IEC 60068-2-27
Degree of protection	IP30
EMC immunity of interference	acc. to EN 61000-6-2
EMC emission of interference	acc. to EN 61000-6-4

8-Port 100Base-TX + 2-Slot 100Base-FX Industrial Switch

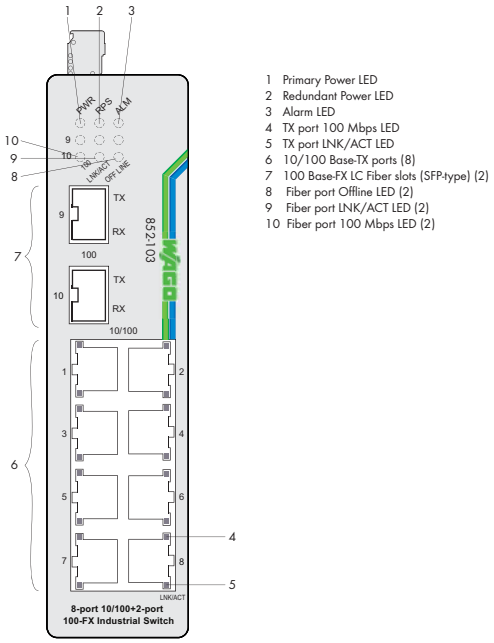

1 Primary Power LED
2 Redundant Power LED
3 Alarm LED
4 TX port 100 Mbps LED
5 TX port LNK/ACT LED
6 10/100 Base-TX ports (8)
7 100 Base-FX LC Fiber slots (SFP-type) (2)
8 Fiber port Offline LED (2)
9 Fiber port LNK/ACT LED (2)
10 Fiber port 100 Mbps LED (2)

The 852-103 Industrial Switch is an 8-port 10/100Base-TX with dual SFP 100Base-FX port (SFP modules are optional) ETHERNET switch.
The switch has a rugged housing, a redundant power supply and function monitoring with relay, making it ideal for a wide range of applications.

Features:
- Redundant DC power supply
- Large supply voltage range: 9 V ... 48 V
- DIP switch enables alarm functions
- Full compliance with IEEE802.3, 802.3u stantards
- Non-blocking, store-and-forward switching
- Auto-negotiation on all 10/100Base-TX ports
- Auto-MDI/MDIX (crossover) on all 10/100Base-TX ports

Description	Item No.	Pack. Unit
8/2 Port 100Base-TX/FX Industrial Switch	**852-103**	1
8/2 Port 100Base-TX/FX Industrial Switch T	**852-103/040-000**	1
Extended temperature range: -40 °C ... +70 °C		

Accessories	Item No.
SFP Module 2: 1310nm, 100Base-FX Multi-mode LC, 2 km	**852-201/107-002**
SFP Module 30: 1310nm, 100Base-FX Single-mode LC, 30 km	**852-201/107-030**
SFP Module 2 T: 1310nm, 100Base-FX, Multi-mode, LC, 2 km, (Extended temperature range: -40 °C ... +70 °C)	**852-201/040-002**

Approvals	
Conformity marking	CE
Korea Certification	
UL 508	to 60 °C (852-103/040-000)

Technical Data	
Ports	8 x 10/100Base-TX (RJ-45);
	2 x SFP 100Base-FX Fiber
Standards	IEEE 802.3u 100Base-TX/FX;
	IEEE 802.3 10Base-T
Throughputs	14,880/148,800 packets per second
	(pps) to 10/100 Mbps ports
Wavelength (optical fibers)	depend on SFP module
Maximum length	10/100Base-TX: 100 m;
	Fiber optic: up to 30 km
Supply voltage	9 V ... 48 V DC (line length < 3 m)
Energy consumption max.	6.08 W
Energy consumption typ. (24 V)	5.76 W
Operating temperature	0°C ... +60°C (852-103)
	-40 °C ... +70 °C (852-103/040-000)
Storage temperature	-20 °C ... +80 °C (852-103)
	-40 °C ... +85 °C (852-103/040-000)
Relative air humidity (no condensation)	95 %
Dimensions (mm) W x H x L	50 x 120 x 162
	Height from upper-edge of DIN 35 rail
Weight	922 g
Vibration resistance	acc. to IEC 60068-2-6
Shock resistance	acc. to IEC 60068-2-27
Degree of protection	IP30
EMC immunity of interference	acc. to EN 61000-6-2
EMC emission of interference	acc. to EN 61000-6-4

7-Port 100Base-TX + 2-Slot 100Base-FX Industrial Managed Switch

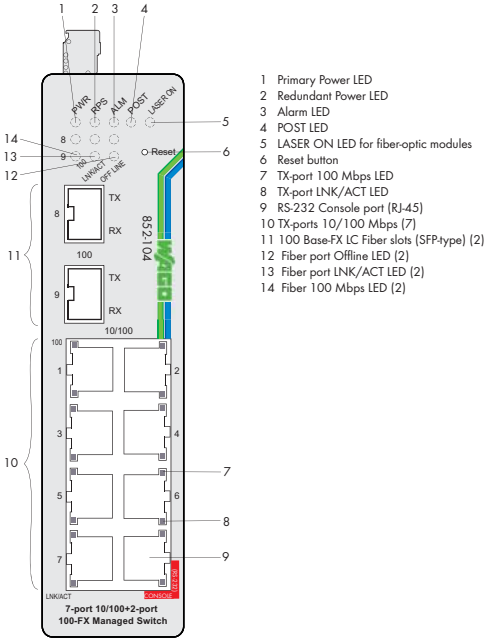

The 852-104 Industrial Switch is a 7-port 10/100Base-TX with dual SFP 100Base-FX port (SFP modules are optional) configurable ETHERNET switch. The switch has a rugged housing, a redundant power supply and function monitoring with relay. These functions along with extensive ETHERNET switch options make it ideal for a wide range of applications.

Features:
- Web-based/SNMP management
- Redundant DC power supply
- Large supply voltage range: 9 V ... 48 V
- DIP switch to enable alarm functions
- Full compliance with IEEE802.3, 802.3u, 802.3x,802.1d, 802.1q, 802.1p standards
- Xpress Ring (redundant ring recovery < 50 ms)
- Non-blocking, store-and-forward switching
- Auto-negotiation on all 10/100Base-TX ports
- Auto-MDI/MDIX (crossover) on all 10/100Base-TX ports
- VLAN (802.1q) VID
- IGMP Snooping for multicast filtering
- Port configuration, status, statistics
- Port Trunking
- SNMP v1/v2 and RMON

Description	Item No.	Pack. Unit
7/2-Port 100Base-TX/FX Industrial Managed Switch	**852-104**	1
7/2-Port 100Base-TX/FX Industrial Managed Switch T	**852-104/040-000**	1
Extended temperature range: -40 °C ... +70 °C		

Accessories	Item No.
SFP Module 2: 1310nm, 100Base-FX Multi-mode LC, 2 km	**852-201/107-002**
SFP Module 30: 1310nm, 100Base-FX Single-mode LC, 30 km	**852-201/107-030**
SFP Module 2 T: 1310nm, 100Base-FX, Multi-mode, LC, 2 km, (Extended temperature range: -40 °C ... +70 °C)	**852-201/040-002**

Approvals	
Conformity marking	CE
Korea Certification	
UL 508	to 60 °C (852-104/040-000)

Technical Data	
Operating temperature	0°C ... +60°C (852-104)
	-40 °C ... +70 °C (852-104/040-000)
Storage temperature	-20 °C ... +80 °C (852-104)
	-40 °C ... +85 °C (852-104/040-000)
Relative air humidity (no condensation)	95 %
Dimensions (mm) W x H x L	50 x 120 x 162
	Height from upper-edge of DIN 35 rail
Weight	1050 g

Technical Data	
Ports	7 x 10/100Base-TX (RJ-45);
	2 x SFP 100Base-FX Fiber;
	1 x RS-232 (RJ-45)
Standards	IEEE 802.3u 100Base-TX/FX;
	IEEE 802.3ad Port Trunking;
	IEEE 802.3 10Base-T;
	IEEE 802.1d Spanning Tree Protocol;
	IEEE 802.3x Flow Control;
	IEEE 802.1p Priority Queues;
	IEEE 802.1q VLAN Tagging
MAC table	Up to 2K addresses
VLANs	Port-based and Tag-based (64VIDs)
Throughputs	14,880/148,800 packets per second
	(pps) to 10/100 Mbps ports
Wavelength (optical fibers)	depend on SFP module
Maximum length	10/100Base-TX: 100 m;
	Fiber optic: up to 30 km;
	RS-232: 15 m
Supply voltage	9 V ... 48 V DC (line length < 3 m)
Energy consumption max.	10.08 W
Energy consumption typ. (24 V)	8.4 W
Vibration resistance	acc. to IEC 60068-2-6
Shock resistance	acc. to IEC 60068-2-27
Degree of protection	IP30
EMC immunity of interference	acc. to EN 61000-6-2
EMC emission of interference	acc. to EN 61000-6-4

5-Port 100Base-TX Industrial Eco Switch

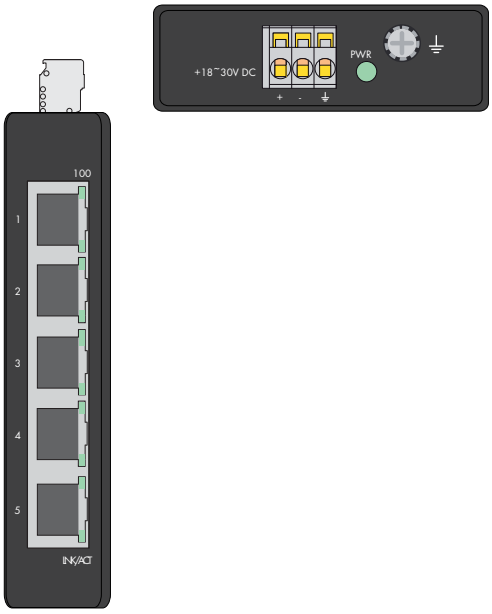

The 852-111 has 5 ports with each port featuring Auto-negotiation and auto MDI/MDI-X detection. Existing 10Mbps networks can now be upgraded effortlessly to higher speed 100Mbps Fast ETHERNET networks.
The 852-111 5-port density can be used to create multiple segments to alleviate client congestion and provide dedicated bandwidth to each user node. The 852-111 is a cost-effective solution to keep up with the constant demands for emerging IP-based industry communication needs.
The switch can be easily configured and installed and is also ideally suited for small to medium-sized networks.

Features:

- 5-port 10/100 Mbps Auto-negotiation ETHERNET ports
- Comprehensive front-panel diagnostic LEDs
- Supports Auto-MDI/MDI-X
- Full/half-duplex transfer modes for each port
- Wire speed reception and transmission
- Store-and-forward switching method
- Integrated address Look-Up Engine, supports 2K absolute MAC addresses
- Supports surge protection
- IEEE 802.3x flow control for fullduplex
- Supports DIN 35 rail

Description	Item No.	Pack. Unit
5-Port 100Base-TX Industrial Eco Switch	**852-111**	1

Accessories	Item No.
Carrier Rail Adapter for DNV Approval	**852-9101**

Approvals

Conformity marking	CE
Korea Certification	KC
Marine applications	DNV (only with 852-9101 Carrier Rail Adapter)
cULus UL 508	

Technical Data

Ports	5 x 10/100Base-TX (RJ-45)
Standards	IEEE 802.3 10Base-T;
	IEEE 802.3u 100Base-TX/FX;
	IEEE 802.3x Flow Control
Topology	Star
LED	each device:
	1 x Power (PWR), green;
	each port:
	1 x Link/Activity (LNK/ACT), green;
	1 x 10/100 Mbps, green
Supply voltage	18 V ... 30 V DC
Energy consumption max.	3 W
Operating temperature	-40 °C ... +70 °C
	DNV: -25°C ... +70°C
Storage temperature	-40 °C ... +80 °C
Relative air humidity (no condensation)	95 %
Dimensions (mm) W x H x L	23.4 x 73.8 x 109.2
	Height from upper-edge of DIN 35 rail
Fixing	DIN 35 rail
Weight	180 g

8-Port 100Base-TX Industrial Eco Switch

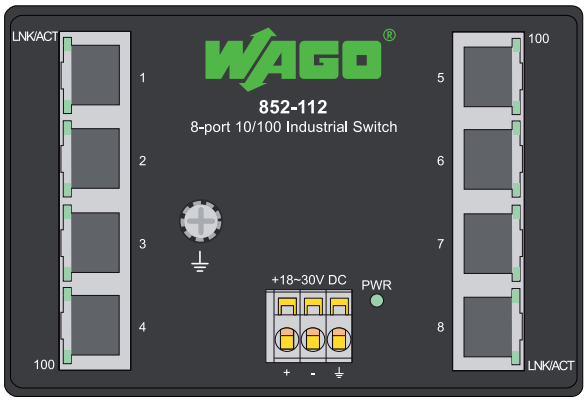

852-112 has 8 ports with each port featuring Auto-negotiation and Auto MDI/MDI-X detection. Existing 10Mbps networks can now be upgraded effortlessly to higher speed 100Mbps Fast ETHERNET networks.
The 852-112 8-port density can be used to create multiple segments to alleviate client congestion and provide dedicated bandwidth to each user node. The 852-112 is a cost-effective solution to keep up with the constant demands for emerging IP-based industry communication needs.
The switch can be easily configured and installed and is also ideally suited for small to medium-sized networks.

Features:
- 8-port 10/100 Mbps Auto-negotiation ETHERNET ports
- Comprehensive front-panel diagnostic LEDs
- Supports Auto-MDI/MDI-X
- Full/half-duplex transfer modes for each port
- Wire speed reception and transmission
- Store-and-forward switching method
- Integrated address Look-Up Engine, supports 2K absolute MAC addresses
- Supports surge protection
- IEEE 802.3x flow control for fullduplex
- Supports DIN 35 rail

Description	Item No.	Pack. Unit
8-Port 100Base-TX Industrial Eco Switch	**852-112**	1

Approvals

Conformity marking	CE
Korea Certification	
UL 508	

Technical Data

Ports	8 x 10/100Base-TX (RJ-45)
Standards	IEEE 802.3 10Base-T;
	IEEE 802.3u 100Base-TX/FX;
	IEEE 802.3x Flow Control
Topology	Star
LED	each device:
	1 x Power (PWR), green;
	each port:
	1 x Link/Activity (LNK/ACT), green;
	1 x Speed (100 Mbps), green
Supply voltage	18 V ... 30 V DC
Energy consumption max.	3 W
Operating temperature	-40°C ... +70°C
Storage temperature	-40 °C ... +80 °C
Relative air humidity (no condensation)	95 %
Dimensions (mm) W x H x L	109.2 x 23.4 x 73.8
	Height from upper-edge of DIN 35 rail
Fixing	DIN 35 rail
Weight	415 g

5-Port 1000Base-T Industrial Eco Switch

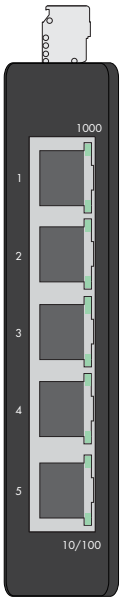

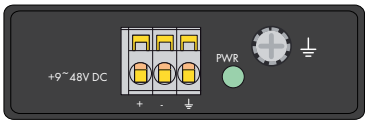

The 852-1111 is a 5-port 1000Base-T industrial ETHERNET switch supporting Auto-Negotiation and Auto-MDI-/MDI-X detection for each port.
The 852-1111 5-port density can be used to create multiple segments to alleviate client congestion and provide dedicated bandwidth to each user node. The 852-1111 is a cost-effective solution to keep up with the constant demands for emerging IP-based industry communication needs.
The switch can be easily configured and installed and is also ideally suited for small to medium-sized networks.

Features:
- 5-port 10/100/1000 Mbps Auto-negotiation ETHERNET ports
- Comprehensive front-panel diagnostic LEDs
- Supports Auto-MDI/MDI-X
- Full/half-duplex transfer modes for each port
- Wire speed reception and transmission
- Store-and-forward switching method
- Integrated address Look-Up Engine, supports 8K absolute MAC addresses
- Supports surge protection
- IEEE 802.3x flow control for fullduplex
- Supports DIN 35 rail

Description	Item No.	Pack. Unit
5-Port 1000Base-T Industrial Eco Switch	**852-1111**	1

Accessories	Item No.
Carrier Rail Adapter for DNV Approval	**852-9101**

Approvals

Conformity marking	CE
Marine applications	DNV (only with 852-9101 Carrier Rail Adapter)
cULus UL 508	pending

Technical Data

Ports	5 x 10/100/1000Base-T (RJ-45)
Standards	IEEE 802.3 10Base-T;
	IEEE 802.3u 100Base-TX/FX;
	IEEE 802.3ab 1000Base-T;
	IEEE 802.3x Flow Control
Topology	Star
Jumbo frame size	9216 bytes
LED	each device:
	1 x Power (PWR), green;
	each port:
	1 x 1000 Mbps, green;
	1 x 10/100 Mbps, green
Supply voltage	9 V ... 48 V DC
Energy consumption max.	3 W
Operating temperature	-40 °C ... +70 °C
	DNV: -25 °C ... +70 °C
Storage temperature	-40 °C ... +80 °C
Relative air humidity (no condensation)	95 %
Dimensions (mm) W x H x L	23.4 x 73.8 x 109.2
	Height from upper-edge of DIN 35 rail
Fixing	DIN 35 rail
Weight	190 g

Description		Item No.	Pack. Unit
Stainless Steel Mounting Adapter, for use with 852-111 and 852-1111	Required for DNV approval of Industrial ECO Switches; Stainless steel; Dimensions (mm) W x H x D: 20.0 x 9.6 x 102.2; Weight: 35 g	**852-9101**	1

SFP Modules 100Base-FX LC

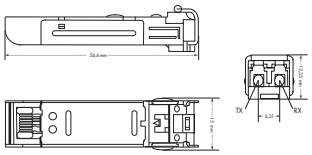

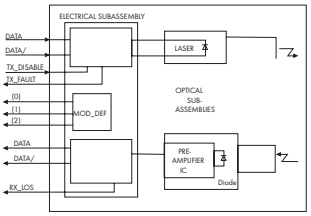

ETHERNET via fiber optic cables offers a multitude of advantages for industrial applications.
High immunity to interference, electrical isolation, and long ranges are important parameters here.

Description		Item No.	Pack. Unit
SFP Module 2: 1310nm, 100Base-FX	Connector Duplex LC,	**852-201/107-002**	1
Multi-mode LC, 2 km	Wavelength 1310 nm,		
	Fiber type Multi-mode 62.5/125 µm, 50/125 µm,		
	Maximum length 2000 m,		
	Operating temperature 0 °C ... +60 °C,		
	Storage temperature -20 °C ... +80 °C,		
	Dimensions (mm) W x H x D: 13.4 x 13.3 x 56.6;		
	Laser Class 1 acc. to EN 60825-1		
SFP Module 30: 1310nm, 100Base-FX	Connector Duplex LC,	**852-201/107-030**	1
Single-mode LC, 30 km	Wavelength 1310 nm,		
	Fiber type Single-mode 9/125 µm,		
	Maximum length 30000 m,		
	Operating temperature 0 °C ... +60 °C,		
	Storage temperature -20 °C ... +80 °C,		
	Dimensions (mm) W x H x D: 13.4 x 13.3 x 56.6;		
	Laser Class 1 acc. to EN 60825-1		
SFP Module 2 T: 1310nm,	Connector Duplex LC,	**852-201/040-002**	1
100Base-FX, Multi-mode, LC, 2 km,	Wavelength 1310 nm,		
(Extended temperature range: -40 °C ... +70 °C)	Fiber type Multi-mode 62.5/125 µm, 50/125 µm,		
	Maximum length 2000 m,		
	Operating temperature -40 °C ... +70 °C,		
	Storage temperature -40 °C ... +80 °C,		
	Dimensions (mm) W x H x D: 13.4 x 13.3 x 56.6;		
	Laser Class 1 acc. to EN 60825-1		

Characteristics:

- Duplex LC optical connector
- Industry standard small form pluggable (SFP) package
- Compliant with Fast ETHERNET standard;
- Differential LVPECL inputs and outputs;
- Single 3.3V power supply;
- TTL signal detect indicator;
- Hot pluggable capability

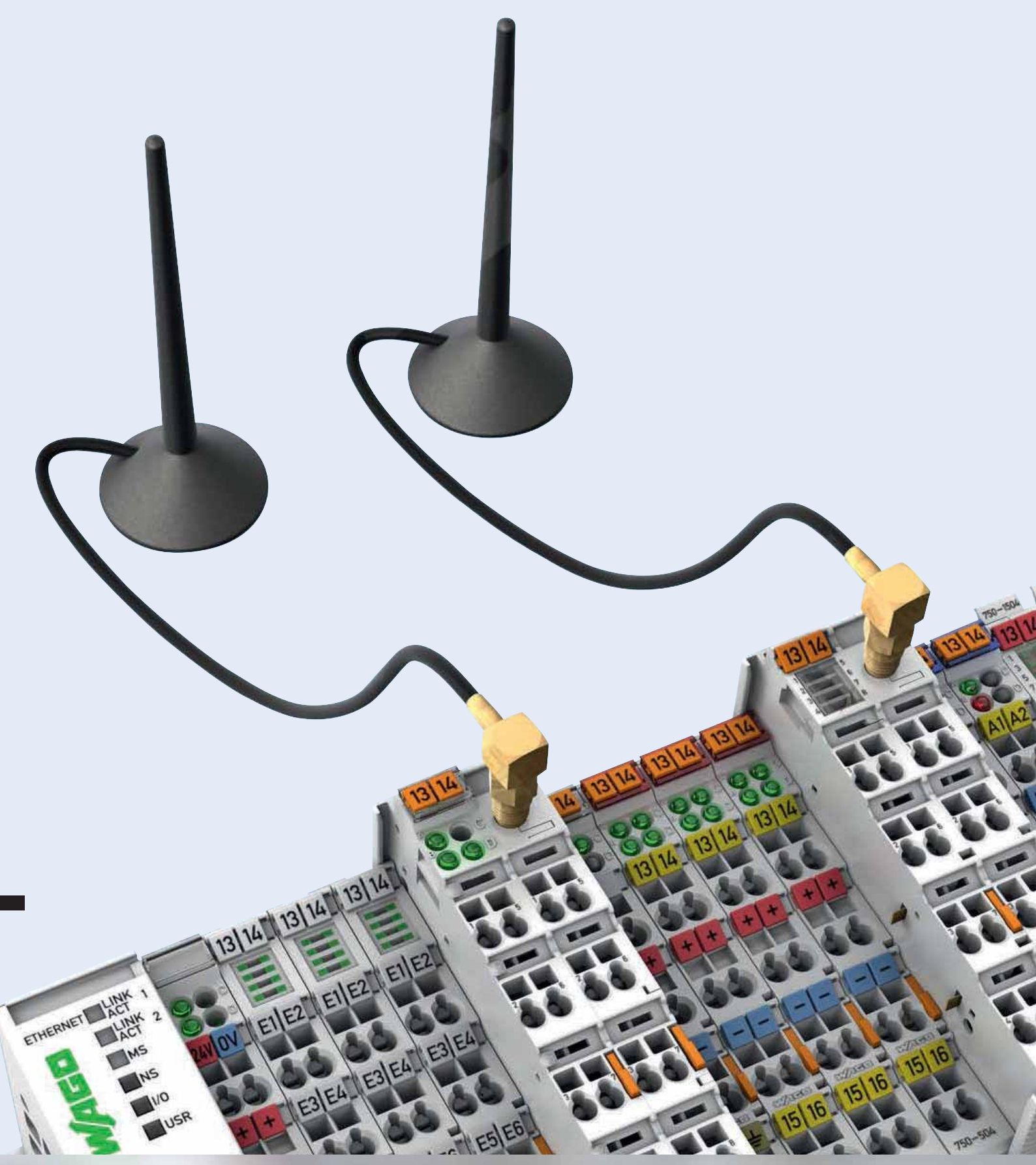

Wireless Technology

Wireless Technology

- *Bluetooth*®
- WLAN
- EnOcean®

Section 9 ▶

TO-PASS® telecontrol technology

For applications that go beyond site boundaries

- Telecontrol technology based on GSM/GPRS

Wireless Technology – *Bluetooth*®, WLAN and EnOcean® Components

Contents

			Page
General Product Information			540
Interfaces and Configurations			541
	Description	**Item No.**	
***Bluetooth*® Application and Installation Instructions**			542
	I/O-System 750, Communication Modules, *Bluetooth*®/RF Transceiver	750-644	544
	Bluetooth® ETHERNET Gateway	758-915	545
	Bluetooth® Module, RS-232, IP67	757-801	546
	WAGO Radio Adapter	750-921	547
WLAN Application and Installation Instructions			548
	WLAN ETHERNET Gateway • 2.4 GHz • 5 GHz	 758-916 758-917	549
EnOcean® Application and Installation Instructions			550
	EnOcean® Radio Receiver in DIN-Rail Mounted Enclosure • 4-Channel Radio Receiver, 4 Make Contact, 16 A • 4-Channel Radio Receiver, 4 Changeover Contact, 8 A	 789-601 789-602	551
	WINSTA® Radio Receiver • 4-Channel Radio Receiver, 4 Make Contact • 2-Channel Radio Receiver, Sunblind Outputs	 770-629/101-000 770-629/102-000	552
	I/O-System 750, Communication Modules, Radio Receiver Module	750-642	553
	Radio Transmitter, EnOcean® easyfit PTM 250 • 2-Channel Lighting Control • 4-Channel Lighting Control • 2-Channel Blind Control • 4-Channel Blind Control	 758-940/001-000 758-940/003-000 758-940/002-000 758-940/004-000	554
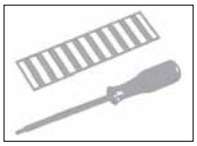	**Accessories** Antennas, Connecting Cables, Adapters		555

Wireless Technology in the Industrial Environment

Wireless technology can support wired applications or enable completely new applications. In mobile or movable systems, wireless technology is the first choice when greater distances or obstacles must be overcome. It is an alternative for applications in which wired solutions are not economical or technically feasible.

Various wireless technologies can be used depending on the application.

Bluetooth® — Robust, Flexible, High-Performance

Well-known in consumer electronics, *Bluetooth*® technology is also well-suited to industrial use with its internationally approved frequency range, a very robust transmission technology (frequency hopping), real-time response and a range of up to 1000 m. It makes wireless process data communication between two stations possible (point-to-point communication), and also enables the setup of a piconet in which a *Bluetooth*® master can communicate with up to seven slaves, e.g., decentralized mobile sensors. In addition, *Bluetooth*® can be used as the radio system for commissioning.

Features:

- Secure transmission (encrypted)
- AFH (Adaptive Frequency Hopping)
- Adaptive transmission power
- Uses the license-free 2.4GHz frequency band

GPRS for Remote Connections

For applications that go beyond site boundaries, *TO-PASS*® telecontrol technology provides the right solution. More detailed information on *TO-PASS*® is available in Section 9.

WLAN — Full IT Integration

WLAN makes it easy to setup a wireless transmission link for ETHERNET protocols. This can be standard ETHERNET protocols, e.g., for communication between a smartphone and automation components. Industrial fieldbus protocols such as PROFINET, MODBUS/TCP or Ethernet/IP can also be used to link mobile equipment with stationary equipment. Ranges up to 400 m are possible depending on the transmission technology used.

EnOcean® — The Radio Standard in Building Automation

Wireless switches and sensors based on EnOcean® technology harvest available energy to power themselves, e.g., kinetic energy from actuating a switch or sensors powered by ambient light. This energy harvesting completely eliminates maintenance of the radio transmitter at a range of up to 300 m in open air (30 m in buildings).

- Always the right radio system for the industry and application
- Industrial design: high-performance, robust and safe
- Tightly integrated into WAGO automation technology

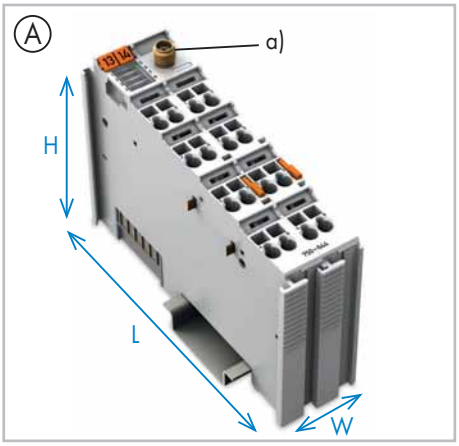

Communication Module for I/O-System (A)
- For use with
  - Programmable fieldbus controllers (PFC)
  - Fieldbus coupler (FC) I/O-System 750 Series
- Antenna connection (a)
- W x H x L (mm) 24 x 64 x 100, height from upper edge of DIN-rail, plus approx. 6.5 mm of excess length with antenna socket

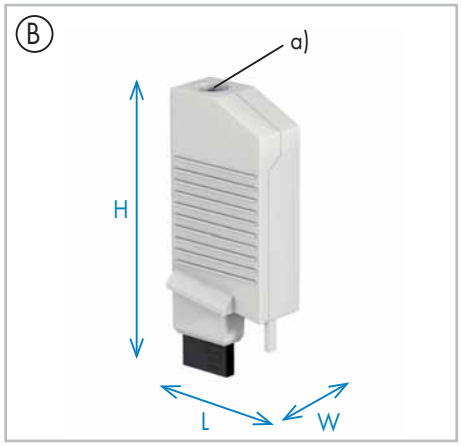

Radio Adapter (B)
- For use with
  - PFC, 750 XTR Series PFC, FC, 750 XTR Series FC
  - JUMPFLEX® Signal Conditioners, 2857 + 857 Series
- Integrated antenna
- Diagnostic LED (a)
- W x H x L (mm) 15 x 50 x 19

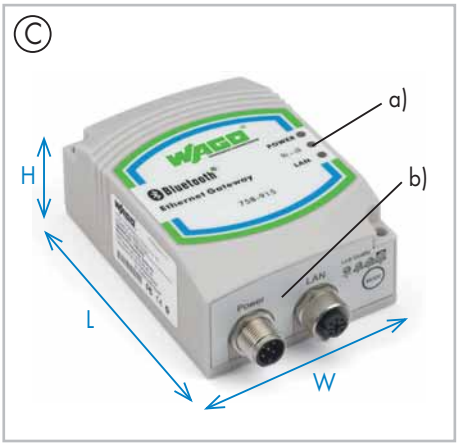

ETHERNET Gateway (C)
- Integrated converter from ETHERNET protocols to radio technology
- Integrated antenna
- Diagnostic LEDs (a)
- Connections with M12 pluggable connectors (b)
- Degree of protection: IP65
- W x H x L (mm) 66 x 36.2 x 91

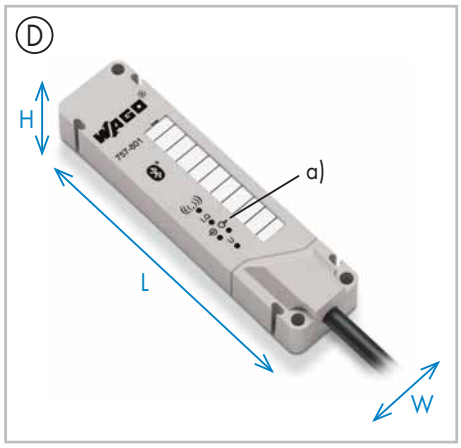

RS-232, IP67 Module (D)
- *Bluetooth*® / RS-232 converter
- Diagnostic LEDs (a)
- Connecting cable
- Degree of protection: IP67
- W x H x L (mm) 30 x 20 x 117

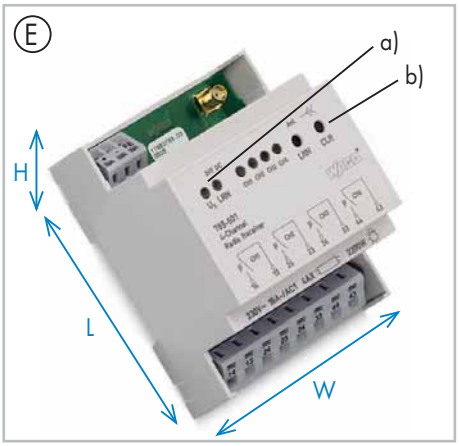

DIN-Rail Mount Enclosure (E)
- For installation in sub-distribution panels
- Diagnostic LEDs (a)
- Learn (LRN) button, Clear (CLR) button (b)
- Degree of protection: IP20
- W x H x L (mm) 70 x 55 x 90

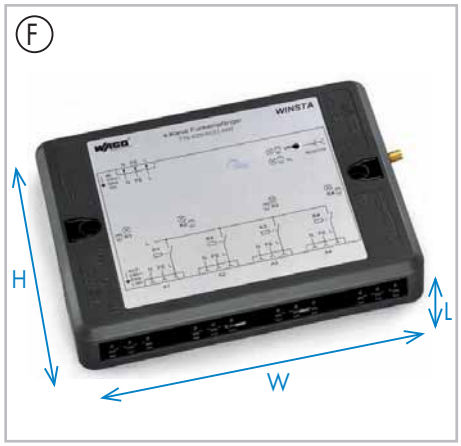

***WINSTA*® Plugabble Connection System (F)**
- Ready-to-use functional unit for building automation
- For wall, floor and ceiling mounting
- Complete pluggable connection technology
- Degree of protection: IP20
- W x H x L (mm) 195 x 145 x 30
- More information on *WINSTA*® in the catalog volume 5

Contact Units (G)
- Universal contact units for standard switch series in building automation
- Compatible with manufacturer programs from BERKER, GIRA, JUNG, MERTEN

Bluetooth® Wireless Technology
Application and Installation Instructions

Wireless Engineering
- Commissioning, maintenance
- For connecting WAGO software on a PC/ notebook to a product's service interface
- Programmable fieldbus controller
- Programmable fieldbus controller XTR
- Fieldbus coupler I/O-System 750
- Fieldbus coupler I/O-System 750 XTR
- Temporary install via compact *Bluetooth*® adapter
- Permanent installation with high degree of protection

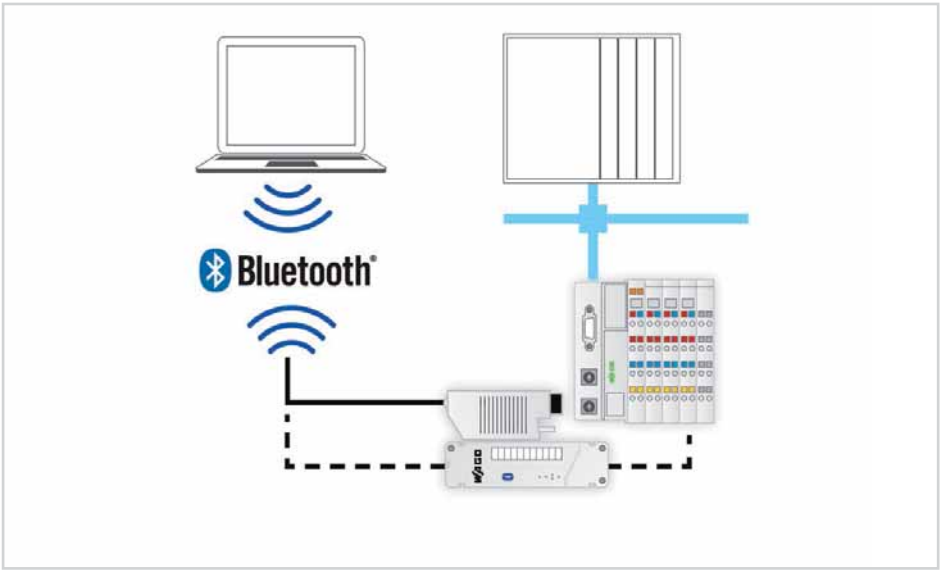

Integration of Mobile Sensors/Actuators
- Data exchange between up to eight modules
- Radio transmitter/receiver in the I/O module
- Operation on
  - Programmable fieldbus controllers
  - Fieldbus couplers
- Cycle time < 30 ms
- Range up to 1000 m in open air

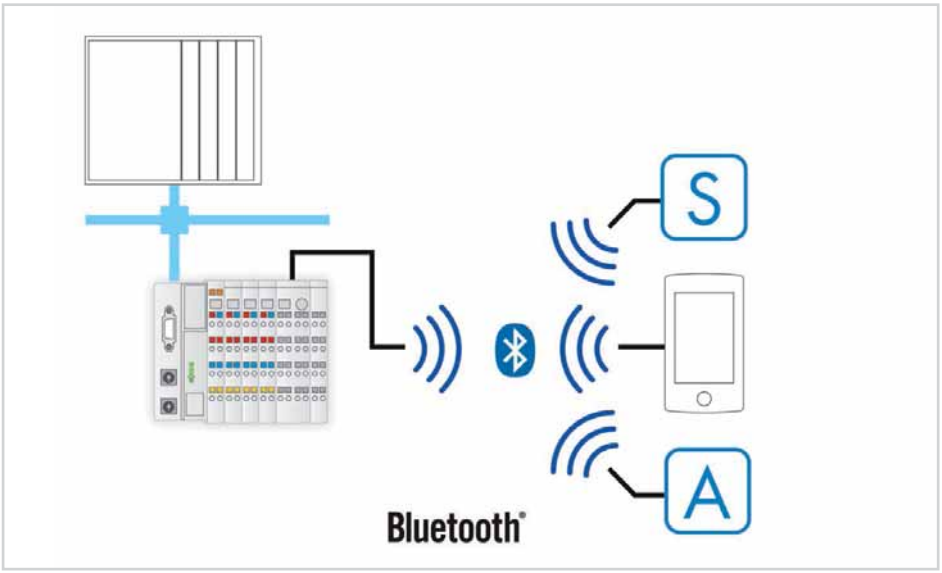

Coupling of Mobile Systems and Data Exchange between Two or More Stations
- Fieldbus-independent coupling of I/O stations (up to eight) or programmable fieldbus controllers
- Example: for coupling a mobile unit with a stationary basic system
- Or for wireless data exchange between several stations over long distances
- Process data coupling
- Cycle time < 30 ms
- Range up to 1000 m in open air

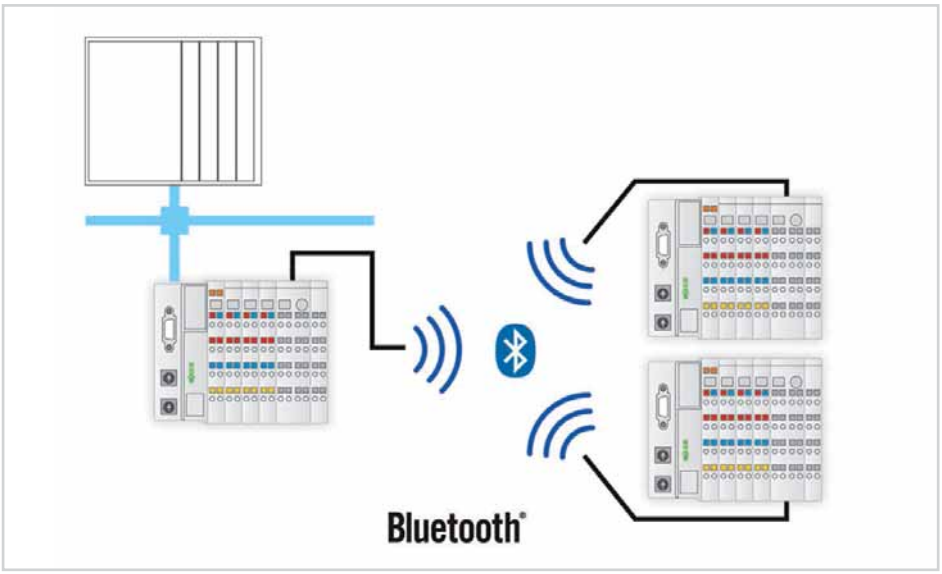

Bluetooth® Wireless Technology
Application and Installation Instructions

Tunneling of ETHERNET Fieldbuses
- Point-to-point connection, e.g., connecting mobile units to a central controller or for connecting fixed stations
- Tunneling PROFINET, MODBUS/TCP, Ethernet/IP, etc. via *Bluetooth*® wireless technology
- Process data coupling
- Range up to 400 m in open air

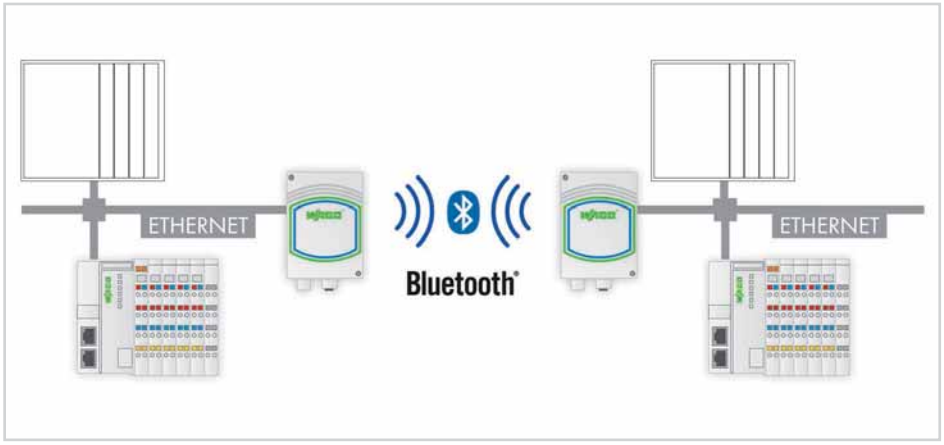

Coupling of Mobile Systems (IP67)
- Fieldbus-independent coupling of I/O stations or programmable fieldbus controllers
- Example: for coupling a mobile unit with a stationary basic system
- Process data coupling
- Range up to 100 m in open air

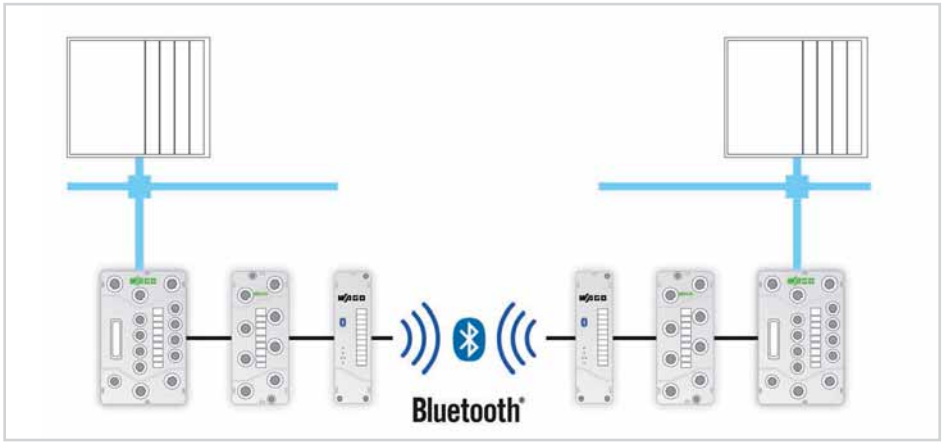

Coupling of Mobile Systems
- Tunneling ETHERNET telegrams via *Bluetooth*® wireless technology
- Point-to-point connection, e.g., for coupling a mobile unit with a stationary basic system
- Process data coupling
- Range up to 400 m in open air

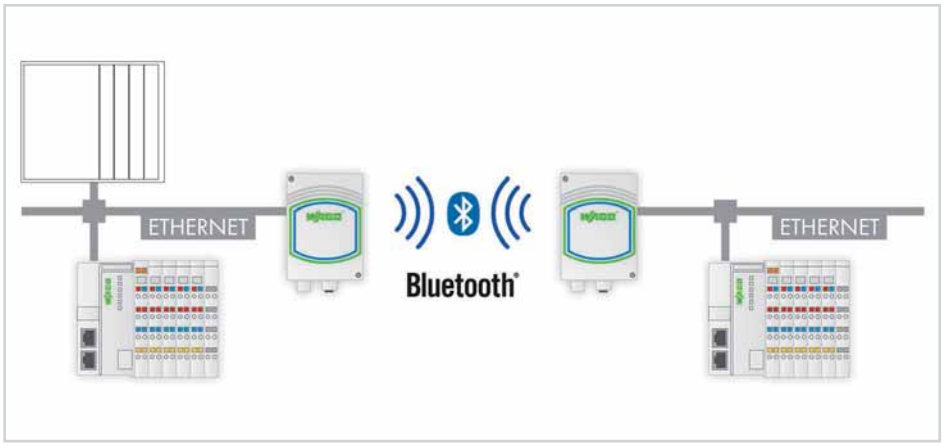

Radio Connection for Serial Devices
- Coupling of standard devices with RS-232 interface
- Example: printer to a mobile unit controlled by a stationary basic system
- Or to a portable RFID reader
- Range up to 100 m in open air

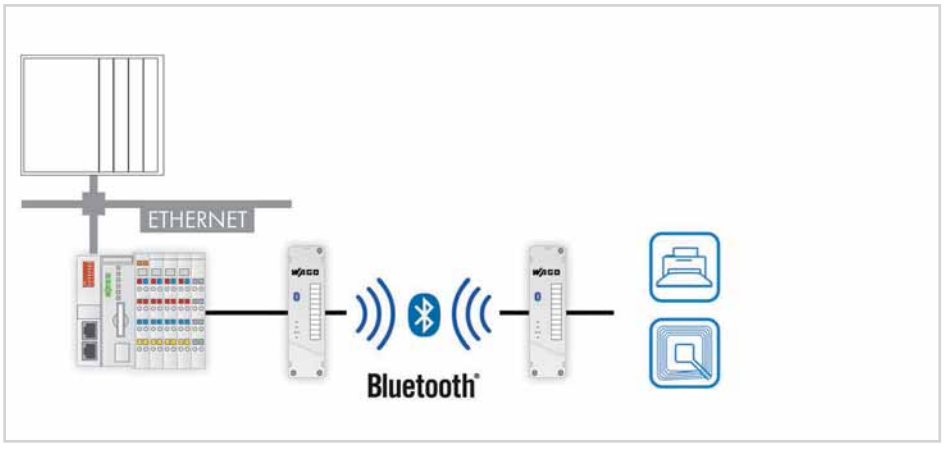

Bluetooth®/RF Transceiver

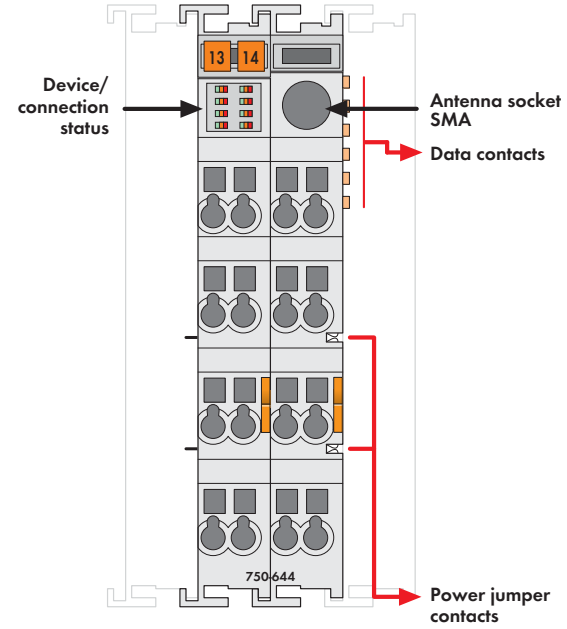

Delivered without miniature WSB markers

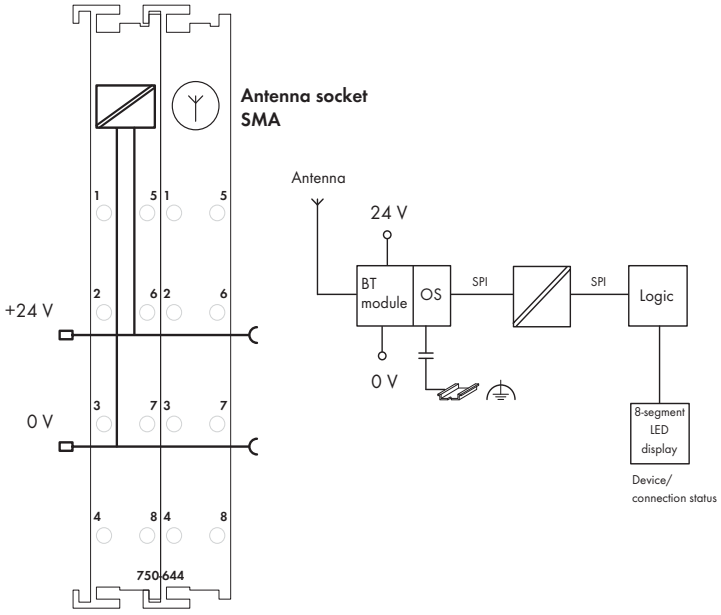

The 750-644 I/O Module permits the wireless exchange of process data with up to seven other devices via Bluetooth® 2.0 radio technology. Interoperability with Bluetooth devices is made non-proprietary via PAN and SPP Bluetooth® profiles. A special profile for time-sensitive applications is also available.

Reliable connections over distances of up to 1000m are possible using the WAGO 758-912 external antenna.

The module's extended diagnostic functions include cyclic and acyclic state information. For quick on-site diagnostics, main information on operational status and radio connection is also displayed via 8 LEDs.

The I/O module can be operated with all standard fieldbus couplers/controllers from the WAGO-I/O-SYSTEM 750. Module configuration is performed locally via WAGO-I/O-CHECK.

Description		Item No.	Pack. Unit
Bluetooth®/RF Transceiver		**750-644**	1

Accessories		Item No.	Pack. Unit
Miniature WSB Quick marking system			
	plain	**248-501**	5
	with marking	see Section 11	
External antenna	WLAN/Bluetooth 2.4 GHz	**758-912**	1

Approvals

FC	FCC approval (This device complies with part 15 of FCC rules)
Bluetooth	Bluetooth® approval
Conformity marking	CE
Korea Certification	
UL 508	
ANSI/ISA 12.12.01	Class I, Div. 2, Grp. ABCD, T4
TÜV 07 ATEX 554086 X	I M2 Ex d I Mb,
	II 3 G Ex nA IIC T4 Gc,
	II 3 D Ex tc IIIC T135°C Dc
IECEx TUN 09.0001 X	Ex d I Mb,
	Ex nA IIC T4 Gc,
	Ex tc IIIC T135°C Dc

Technical Data

Wireless technology	Bluetooth® 2.0 + EDR
Topology	Piconet (1 master, max. 7 slaves)
Coexistence	AFH and adaptive transmission power
Profiles	SPP, PAN
Operating modes	Communication mode with ad-hoc profile
	for high connectivity and real-time profile
	for time-critical applications, as well as
	configuration mode
Frequency band	2402-2480 MHz (license-free ISM band)
Transmitter power	up to 20 dBm (Bluetooth® Class 1)
Receiver sensitivity	-94 dBm
Transmission range	max. 1000 m in open field, 100 m in
	buildings (using a WAGO external
	antenna, item no. 758-912)
Voltage supply (Bluetooth)	via 24 V DC field supply
Voltage supply (internal)	via system voltage DC/DC
Current consumption (Bluetooth)	approx. 8 mA, max. 35 mA
Current consumption (internal)	approx. 20 mA
Isolation	500 V antenna/system
Internal bit width	12, 24, 48 bytes configurable;
	incl. 1 byte control/status
Diagnostics (via visual indicator)	Device status, connection status [1]
Diagnostics (via process image)	Device status, connection status [1],
	time monitoring
Configuration	WAGO-I/O-CHECK and
	WAGO-I/O-PRO CAA
Dimensions (mm) W x H x L	24 x 64* x 100; *+ excess length of the
	SMA socket approx. 6.5 mm
Weight	85 g
EMC immunity of interference	acc. to EN 61000-6-2, EN 61131-2
EMC emission of interference	acc. to EN 61000-6-3, EN 61131-2

[1] Quality of radio connection, signal strength, interference

Bluetooth® ETHERNET Gateway

Wireless transmission link for ETHERNET protocols

Power connector:
M12 plug, A-coded

1: Vin + (DC 9 ... 30 V)
2: External Trigger Ground
3: Vin GND (0 V)
4: External Trigger + (DC 9 ... 30 V)
5: n.c.

ETHERNET connector:
M12 socket, D-coded

1: Transmit +
2: Receive +
3: Transmit -
4: Receive -

The 758-915 Bluetooth® ETHERNET gateway simplifies creation of a wireless transmission link for ETHERNET protocols (e.g., PROFINET, MODBUS/TCP, Ethernet/IP).
The gateway is used as a cable substitute to create a robust, industry-proven Bluetooth® 2.0 link between two automation devices.
The IP65 housing and circularly polarized antenna allow the gateway to be used even in harsh industrial environments. Simple, push-button operation provides very fast connection between two Bluetooth® ETHERNET gateways. Additional settings can be made via Web-based management.

Bluetooth® Adaptive Frequency Hopping (AFH) and Low Emission Mode™ provide excellent coexistence with other wireless systems, such as WLAN.

Note:
Two Bluetooth® ETHERNET gateways are required to establish a point-to-point connection.

Description	Item No.	Pack. Unit
Bluetooth® ETHERNET Gateway	**758-915**	1

Accessories	Item No.
IP67 cables and connectors	see Section 11

Approvals

Standards/specifications	R&TTE (Europe)
	FCC/CFR 47 part 15
	IC (Industry Canada)
Conformity marking	CE

Technical Data

Wireless technology	Bluetooth® 2.0
Topology	Point-to-point connection
Coexistence	AFH, Low Emission Mode™
Profiles supported	Generic Access Profile (GAP), Personal Area Networking Profile (PANU, NAP)
Frequency band	License-free ISM band, 2402-2480 MHz
Transmission range	up to 400 m (class 1)
Antenna	Internal, circularly polarized, directional antenna
Voltage supply	24 V DC
Voltage range	9 V ... 30 V DC
Current consumption	46 mA at 24 V DC
Ports	**ETHERNET connector:** M12 socket, D-coded **Power connector:** M12 plug, A-coded
Configuration	Simple, push-button operation and Web-based management
Number of inputs	1 (trigger input)
Dimensions (mm) W x H x L	66 x 36.2 x 91
Weight	120 g
Operating temperature	-30 °C ... +65 °C
Storage temperature	-40 °C ... +85 °C
Degree of protection	IP65
EMC immunity of interference	acc. to EN 61000-6-2
EMC emission of interference	acc. to EN 61000-6-3

Bluetooth® Module, RS-232, IP67

WAGO's 757-801 Bluetooth® Module wirelessly connects a serial interface to external Bluetooth® devices (e.g., PCs/notebooks with Bluetooth®). Data is exchanged via Bluetooth® SPP (Serial Port Profile).

Substitute cabling between two serial devices by automatically restoring the outgoing wireless connection (e.g., to a second Bluetooth® module). High protection class provides enhanced, wireless Bluetooth® module's installation outside of control cabinets.

Coexistence properties:
- AFH (Adaptive Frequency Hopping)
- Adaptive transmission power with configurable upper limits for data exchange and device discovery
- Configurable channel blacklist for FHSS (Frequency Hopping Spread Spectrum)
- Coexistence optimized device discovery supported (media allocation < 5 %, allocation duration < 100 ms)

Description	Item No.	Pack. Unit
***Bluetooth*® Module**	**757-801**	1

Accessories	Item No.
Marking strips, felt-tip pen	see Section 10

Approvals

Conformity marking	CE
Bluetooth	*Bluetooth*® approval

Technical Data

Version	2.1
Radio class	Class 1/max. 100 m
Antenna	integrated
RF output power	max. +10 dBm
RF input sensitivity	typ. -82 dBm
Frequency range	2.402 ... 2.483 GHz (ISM band)
Type of communication	Point-to-point connection
Profiles supported	Serial Port Profile (SPP)
Security encryption	Bluetooth® security mode 4 "Secure Simple Pairing" 128-bit encryption
Dimensions (mm) W x H x L	30 x 20 x 117 (without cable)
Weight	418 g
Fixing	Screw mounting
Ports	RS-232 interface (RX/TX) with hardware flow control (CTS/RTS) *Bluetooth*® radio interface

Technical Data

Baud rate	9600 ... 115200 bps
Indicators	five LEDs
Voltage supply	+24 VDC
Voltage range	+10 V ... +32 VDC
Current input (at 24 VDC)	< 50 mA
EMC immunity of interference	acc. to EN 61000-6-2
EMC emission of interference	acc. to EN 61000-6-3
Permissible temperature range	-20 °C ... +60 °C (static); -5 °C ... +60 °C (moving)
Storage temperature	-30 °C ... +80 °C
Degree of protection	IP67
Connecting cable	
Cable length	5 m
Cable design	Outer sheath PUR halogen-free
	Black
Cable Ø	6.6 mm (± 0.2 mm)
Screening	Copper braiding, tin-plated, 0.10 mm single-wire diameter
Conductor design	4 x 0.34 mm² + 2 x 0.75 mm², conductor 0.34 mm², extra-fine stranded, 43 x 0.10 mm, conductor 0.75 mm², extra-fine stranded, 21 x 0.205 mm, color identification of conductors
Bending radius	10 x cable diameter for flexible application
Bending cycles	1 million cycles

Bluetooth® Adapter

Bluetooth® Adapter in Connection with 750 Series
The Bluetooth® Adapter wirelessly connects a notebook computer with Bluetooth® functionality to the service interface of the buscoupler/controller. It also provides an active connection to a programmable fieldbus controller. As a cable substitute, the Bluetooth® Adapter allows communication between two fieldbus controllers, as well as between fieldbus couplers/controllers via WAGO software tools (e.g., WAGO-I/O-CHECK, WAGO-I/O-PRO). Configurable coexistence properties ensure trouble-free operation in the presence of other radio systems.

Bluetooth® Adapter in Connection with 857 Series
The Bluetooth® Adapter wirelessly connects a notebook computer with Bluetooth® functionality to the service interface of a configurable 857 Series JUMPFLEX® Module.
As a cable substitute, the Bluetooth® Adapter allows communication between JUMPFLEX® Modules and WAGO software tool (WAGOframe) or configuration APP for Android-based end devices.

If required, adapter configuration may be performed via AT commands. The adapter is supplied via both service interface and power supply of coupler/controller or JUMPFLEX® module.

Description	Item No.	Pack. Unit
***Bluetooth*® Adapter**	**750-921**	1

Approvals

Conformity marking	CE
Bluetooth	Bluetooth® approval

Technical Data

Data transfer rate	9600 ... 115000 bps
Frequency range	2.4 ... 2.4835 GHz (ISM band)
Type of communication	Point-to-point connection
Profiles supported	Serial Port Profile (SPP)
Version	2.1
Radio class	Class 2
RF output power	max. +4 dBm (class 2)
RF input sensitivity	typ. -82 dBm
Antenna	integrated
Ports	4-pole service connectors
Configuration	AT commands (e.g. via Hyper Terminal)
Function	Master or Slave
LED	Operating status
Operating temperature	-20 °C ... +60 °C
Current consumption (internal)	60 mA
Security authentification	PIN code or configurable access list
Security encryption	128-bit encryption
Dimensions (mm) W x H x L	15 x 50 x 19
Weight	7 g
Coexistence	Frequency Hopping Spread Spectrum (FHSS), Adaptive Frequency Hopping (AFH), Adaptive transmission power with configurable upper limit, configurable channel blacklist, supports coexistence optimized inquiry (transmission time ≤ 0.1 s; transmission cycle ≥ 2.9 s)

WLAN Wireless Technology
Application and Installation Instructions

Wireless Engineering
- Commissioning, maintenance
- For connections between a notebook and automation system

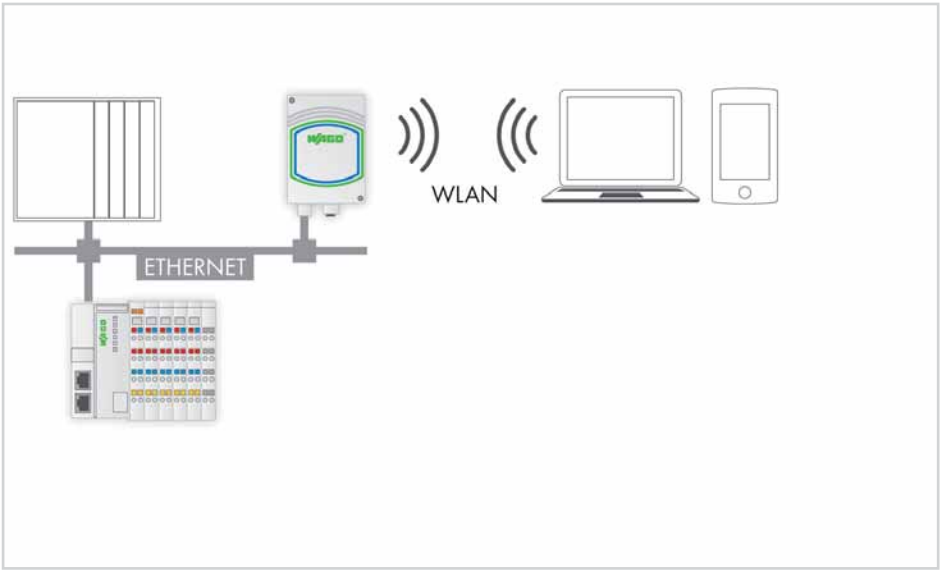

Coupling of Mobile Systems
- Point-to-point connection, e.g., for coupling a mobile unit with a stationary basic system
- Tunneling ETHERNET telegrams via WLAN wireless technology
- Process data coupling
- Range up to 400 m in open error (frequency band 2.4 GHz)
- Range up to 200 m in open error (frequency band 5 GHz)

Tunneling of ETHERNET Fieldbuses
- Point-to-point connection, e.g., for connecting mobile units to a central controller
- Tunneling PROFINET, MODBUS/TCP, Ethernet/IP, etc. via WLAN wireless technology
- Process data coupling
- Range up to 400 m in open error (frequency band 2.4 GHz)
- Range up to 200 m in open error (frequency band 5 GHz)

WLAN ETHERNET Gateway

Wireless transmission link for ETHERNET protocols

Power connector:
M12 plug, A-coded

1: Vin + (DC 9 ... 30 V)
2: External Trigger Ground
3: Vin GND (0 V)
4: External Trigger + (DC 9 ... 30 V)
5: n.c.

ETHERNET connector:
M12 socket, D-coded

1: Transmit +
2: Receive +
3: Transmit -
4: Receive -

WAGO WLAN ETHERNET Gateways simplify creation of a wireless transmission link for ETHERNET protocols (e.g., PROFINET, MODBUS/TCP, Ethernet/IP).

The gateway is used as a cable substitute to create a robust, industry-proven WLAN link between two automation devices.

The IP65 housing and circularly polarized antenna allow the gateway to be used even in harsh industrial environments. Simple, push-button operation provides very fast connection between two WLAN ETHERNET Gateways.

Note:
Two WLAN ETHERNET Gateways of the same type are required to establish a point-to-point connection.

Description	Item No.	Pack. Unit
WLAN ETHERNET Gateway, 2.4 GHz	**758-916**	1
WLAN ETHERNET Gateway, 5 GHz	**758-917**	1

Accessories	Item No.	Pack. Unit
IP67 cables and connectors	see Section 11	

Approvals	
Standards/specifications	R&TTE (Europe)
	FCC/CFR 47 part 15
	IC (Industry Canada)
Conformity marking	CE

Technical Data	
Wireless technology	IEEE 802.11 bgn (758-916)
	IEEE 802.11 an (758-917)
Topology	Point-to-point connection
Security authentification	Open, Shared, WPA/WPA2 PSK, LEAP,
	PEAP
Security encryption	None, WEP64, WEP128, TKIP,
	AES/CCMP
Frequency band	License-free ISM band, 2.4 GHz (758-916)
	License-free ISM band, 5 GHz (758-917)
Transmission range	up to 400 m (758-916)
	up to 200 m (758-917)
Antenna	Internal, circularly polarized, directional
	antenna
Voltage supply	24 V DC
Voltage range	9 V ... 30 V DC
Ports	**ETHERNET connector:**
	M12 socket, D-coded
	Power connector:
	M12 plug, A-coded
Configuration	Simple, push-button operation and
	Web-based management
Number of inputs	1 (trigger input 9 V ... 30 VDC)
Dimensions (mm) W x H x L	66 x 36.2 x 91
Weight	120 g
Operating temperature	-30 °C ... +65 °C
Storage temperature	-40 °C ... +85 °C
Degree of protection	IP65
EMC immunity of interference	acc. to EN 61000-6-2
EMC emission of interference	acc. to EN 61000-6-3

EnOcean® Radio Technology
Application and Installation Instructions

Stand-Alone Solution for DIN-Rail Mounting
- Radio receiver in DIN-rail mount enclosure
- 4-channel radio receiver modules in 70 mm DIN-rail mount enclosure
- Relay outputs in different versions
- Range up to 300 m in open air, approx. 30 m in buildings

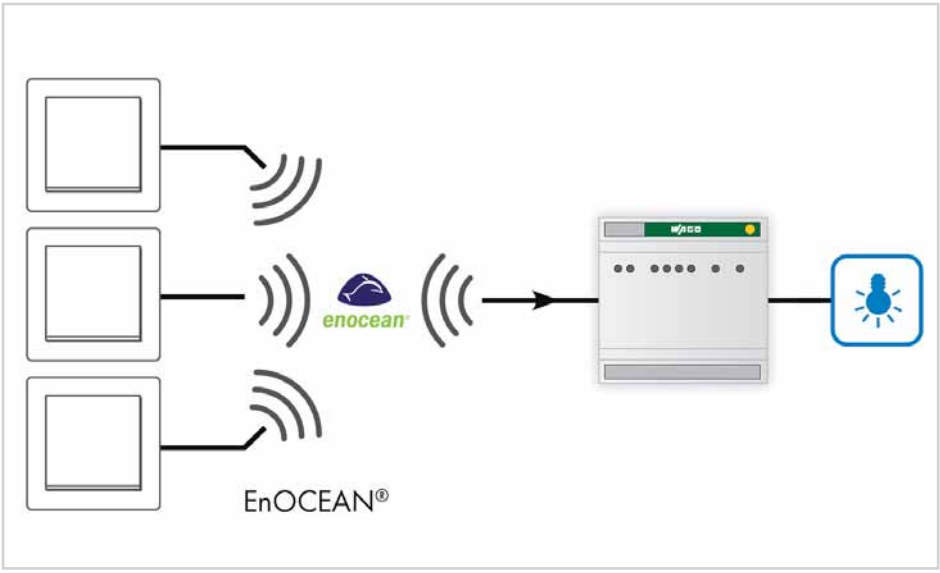

Pluggable Installation with *WINSTA*®
- Various designs, e.g., fully integrated blind control
- 4-channel lighting control
- For wall, floor and ceiling mounting
- Range up to 300 m in open air, approx. 30 m in buildings
- More information on *WINSTA*® in the catalog volume 5

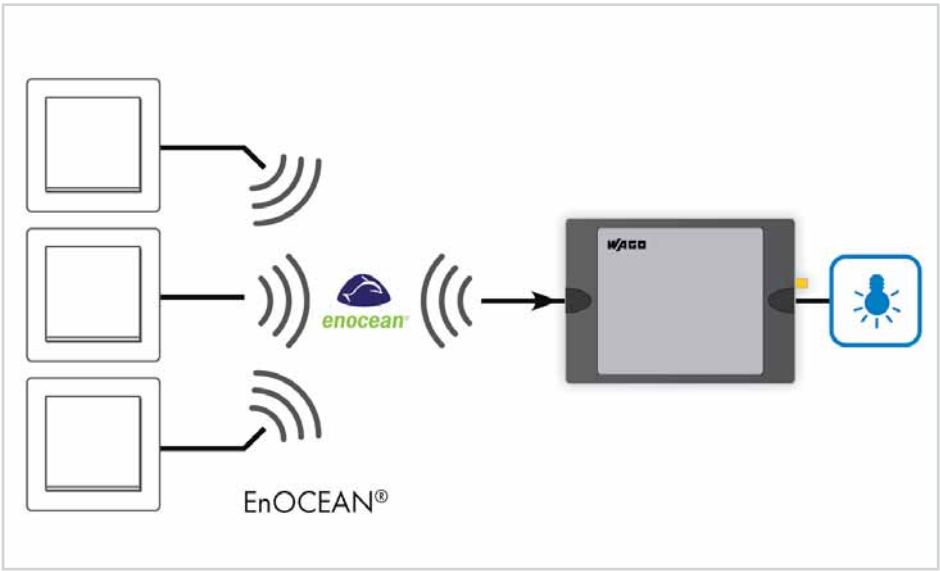

Integration into the WAGO-I/O-SYSTEM
- Receiver in the Bus Module
- Operation on
  - Programmable fieldbus controllers
  - Fieldbus couplers
- Range up to 300 m in open air, approx. 30 m in buildings

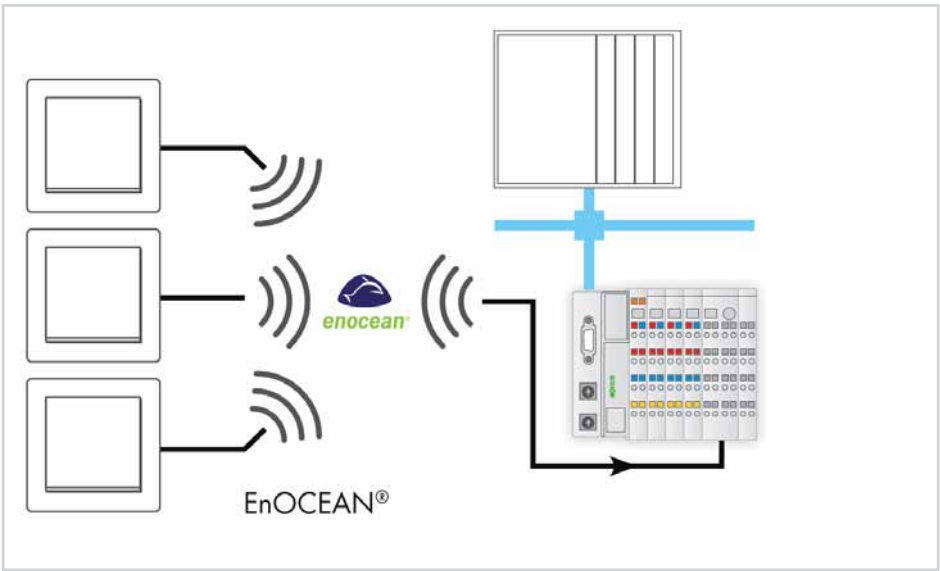

Radio Receiver Module

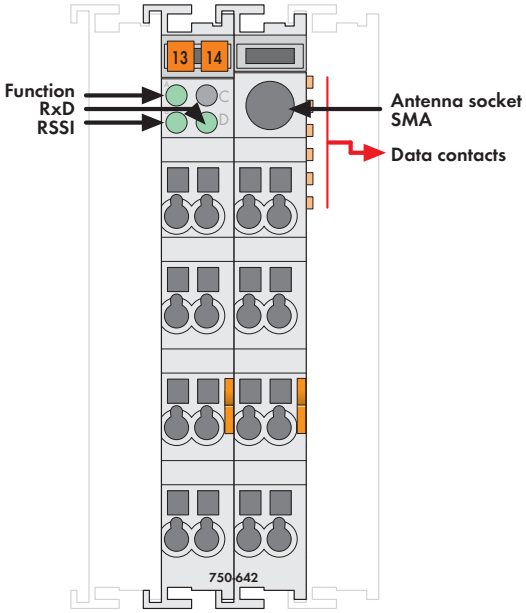

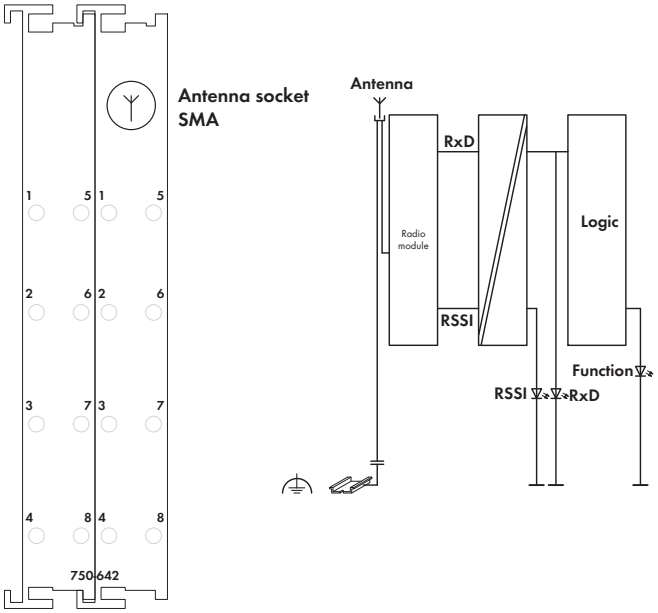

Delivered without miniature WSB markers

The 750-642 I/O Module receives radio telegrams from maintenance-free, battery-less and wireless switches and sensors based on EnOcean radio technology.
The module can be used with any controller of the WAGO-I/O-SYSTEM 750. Preprogrammed function blocks make integration easy.
The energy required for switch or sensor operation is produced by converting one type of energy (heat, solar or mechanical energy) into usable electrical energy. The radiated energy from the transmitter modules is around one million times smaller than mobile phones. Almost any number of sensors is possible. However, the maximum number is around 100 transmitters per module, due to the increasing density of switches/sensors.

Four billion code numbers provide for clear transmitter/receiver assignment. Repeated, time-shifted transmission of the radio telegrams, at very short transmission times, results in a high level of protection against external interference.
The maximum transmission range is approx. 300 meters in open field. Depending on the building materials used and on the spatial geometry, the range may be reduced to typically 30 meters (see manual for more information). The LED (RSSI) indicates a sufficient input level.
*Documentation available in German and English.
An SMA socket which is integrated into the housing allows the connection of an external antenna. The 758-910 external antenna has a magnetic stand and a 2.5m long coax cable with SMA plug (available as an accessory).

Description		Item No.	Pack. Unit
Radio Receiver Module		**750-642**	1

Accessories		Item No.	Pack. Unit
Miniature WSB Quick marking system			
	plain	**248-501**	5
	with marking	see Section 11	
External antenna	GSM 900/1800	**758-910**	1

Approvals

Conformity marking RTTE	www.wago.com
Conformity marking	CE
Korea Certification	
cULus UL 508	
cULus ANSI/ISA 12.12.01	Class I, Div. 2, Grp. ABCD, T4
TÜV 07 ATEX 554086 X	I M2 Ex d I Mb, II 3 G Ex nA IIC T4 Gc, II 3 D Ex tc IIIC T135°C Dc
IECEx TUN 09.0001 X	Ex d I Mb, Ex nA IIC T4 Gc, Ex tc IIIC T135°C Dc

Technical Data

Frequency band	868.3 MHz
Transmission range	300 m in open field (typ. in buildings see manual)
Transmission protocol (radio telegram)	EnOcean
Current consumption (internal)	80 mA
Power supply	via system voltage DC/DC
Isolation	500 V antenna connection/system
Internal bit width	1 x 24 bits in/out (3 bytes user data) 1 x 8 bits control/status
Dimensions (mm) W x H x L	24 x 64* x 100 * + excess length of the SMA socket approx. 6.5 mm
Weight	80 g
EMC immunity of interference	acc. to EN 61000-6-2
EMC emission of interference	acc. to EN 61000-6-3

4-Channel EnOcean Radio Receivers in DIN-Rail Mount Enclosure

	4-channel EnOcean radio receiver with 4 changeover contacts, 8 A	4-channel EnOcean radio receiver with 4 make contacts, 16 A

The 4-channel radio receiver in DIN-rail mount enclosure is used to switch 4 independent electrical devices or loads. The radio receiver processes telegrams transmitted by sensors (binary information) using EnOcean radio technology (PTM + STM modules).
The outputs are switched via relay contacts.

- Radio receiver for battery-less and wireless sensors
- LED indication of switch status
- External antenna for optimum transmission range (required)
- Frequency band 868 MHz
- Transmitter-to-receiver assignment via learn mode

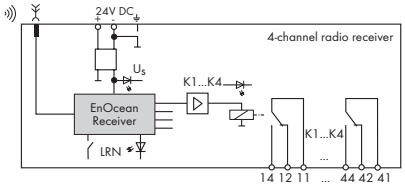

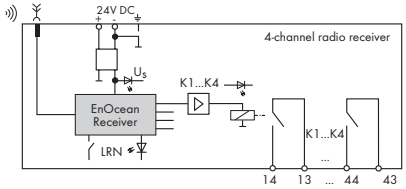

Description	Item No.	Pack. Unit	Item No.	Pack. Unit
4-channel EnOcean radio receiver	**789-602**	1	**789-601**	1
	Product discontinuation		**Product discontinuation**	
	Last call: 31.10.2015		**Last call: 31.10.2015**	

Technical Data

Voltage supply	24 V DC	24 V DC
Voltage range	-15 % ... + 20 %	-15 % ... + 20 %
Current consumption (internal)	max. 90 mA	max. 90 mA
Number of receive channels	40 (10 per output)	40 (10 per output)
Number of channels	4 (relay outputs)	4 (relay outputs)
Output current (per channel)	max. 8 A, AC1	max. 16 A, AC1
Type of load	resistive / motor load	resistive / lamp load
Switching frequency	max. < 5 Hz	max. < 5 Hz
Delay time transmitter /output command	< 100 ms; 40 ms ... 70 ms typ.	< 100 ms; 40 ms ... 70 ms typ.
Switching voltage	230 VAC	230 VAC
Fuse protection	Loads: wire breaker, max.16 A	Loads: wire breaker, max.16 A
Isolation	potential free contacts	potential free contacts
Ambient operating temperature	0°C ... +55°C	0°C ... +55°C
Storage temperature	-25 °C ... +85 °C	-25 °C ... +85 °C
Relative air humidity (no condensation)	85%	85%
Degree of pollution	2	2
Degree of protection	IP20	IP20
Mounting position	any	any
Dimensions (mm) W x H x L	70 x 55 x 90	70 x 55 x 90
	Height from upper-edge of DIN 35 rail	Height from upper-edge of DIN 35 rail
Wire connection	CAGE CLAMP®	CAGE CLAMP®
Cross sections	0.08 mm² ... 2.5 mm² / AWG 28 ... 12 (THHN, THWN)	0.08 mm² ... 2.5 mm² / AWG 28 ... 12 (THHN, THWN)
Strip lengths	5 ... 6 mm / 0.22 in	5 ... 6 mm / 0.22 in
Standards/specifications	Vibration and shock resistance acc. to IEC 60068-2-6 and IEC 60068-2-27	Vibration and shock resistance acc. to IEC 60068-2-6 and IEC 60068-2-27
Accessories: RF magnetic antenna incl. 3m connecting cable with SMA connector	758-910	758-910

WINSTA® Radio Receivers

	4-channel radio receiver with 4 make contacts	2-channel radio receiver with sunblind outputs

The 4-channel radio receiver is used to switch 4 independent electrical devices. The 2-channel radio receiver has 2 sunblind outputs that can be controlled independently from each other. The radio receiver processes telegrams transmitted by switches using EnOcean radio technology (STM modules). The outputs are switched via relay contacts.

- Radio receiver for battery-less and wireless sensors
- LED indication of switch status
- External antenna for optimum transmission range (required)
- Frequency band 868 MHz
- Transmitter-to-receiver assignment via learn mode
- The state of outputs can be predefined for a power failure scenario
- Wire connection using WINSTA connectors

Illustration and block diagram for 770-629/101-000

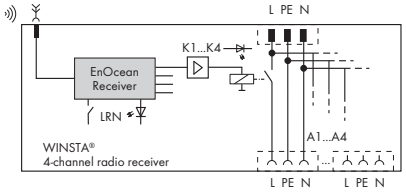

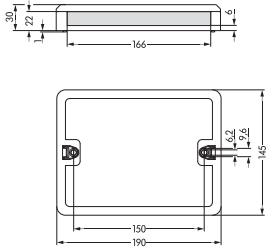

Description	Item No.	Pack. Unit	Item No.	Pack. Unit
WINSTA® radio receiver	**770-629/101-000**	1	**770-629/102-000**	1
	Product discontinuation		**Product discontinuation**	
	Last call: 31.10.2015		**Last call: 31.10.2015**	

Technical Data

Voltage supply	230 V AC, 50 Hz ... 60 Hz, max. 16 A	230 V AC, 50 Hz ... 60 Hz, max. 16 A
Voltage range	± 10 %	± 10 %
Current consumption (internal)	max. 21 mA	max. 21 mA
Number of channels	4	2
Output current (per channel)	max. 16 A / 4 A	2 A motor load
Total current	max. 16 A	max. 4 A
Inrush current	max. 120 A / 50 ms	25 A
Type of load	resistive / lamp load	resistive / inductive
Switching frequency	max. 5 Hz	max. 5 Hz
Isolation	isolated internal voltage supply	isolated internal voltage supply
	2500 V impulse withstand voltage	2500 V impulse withstand voltage
Fuse protection	External, 16 A max.	External, 16 A max.
Ambient operating temperature	0°C ... +55°C	0°C ... +55°C
Storage temperature	-25 °C ... +85 °C	-25 °C ... +85 °C
Relative air humidity (no condensation)	85%	85%
Degree of pollution	2	2
Degree of protection	IP20	IP20
Mounting position	any	any
Dimensions (mm) W x H x L	190 x 145 x 30	190 x 145 x 30
Type of mounting	Wall screw adapter	Wall screw adapter
Standards/specifications	Vibration and shock resistance acc. to IEC 60068-2-6 and	Vibration and shock resistance acc. to IEC 60068-2-6 and
	IEC 60068-2-27	IEC 60068-2-27
Accessories: RF magnetic antenna incl. 3m connecting		
cable with SMA connector	758-910	758-910
Connection accessories WINSTA connectors	Input: socket, 3 poles, e.g. 770-103; 4-channel	Input: socket, 3 poles, e.g. 770-103; 2-channel
	output: plug, 3 poles, e.g. 770-113	output: plug, 4 poles, e.g. 770-114

Radio Receiver and Transmitter

External antenna, GSM 900/1800

External antenna, WLAN/Bluethooth 2.4 GHz

Description		Item No.	Pack. Unit	Technical Data
External antenna	GSM 900/1800	**758-910**	1	Frequency band: 870 MHz ... 960 MHz; 1710 MHz ... 1880 MHz
				VSWR: 870 MHz ... 960 MHz < 1.5; 1710 MHz ... 1880 MHz < 1.5
				Gain: 870 MHz ... 960 MHz 0 dB; 1710 MHz ... 1880 MHz 0 dB
				Max. Power: 20 W
				Cable length: 250 cm
				Connector: SMA right angle plug + ferrite bead
External antenna	WLAN/Bluetooth 2.4 GHz	**758-912**	1	Frequency band: 2400 MHz ... 2485 MHz
				Gain: 2 dBi
				Cable length: 250 cm
				Connector: SMA right angle plug

Notes on operating the antenna with WAGO EnOcean radio receivers: The antenna is to be mounted on a plate measuring at least 9.8 x 9.8 inches (25 x 25 mm)
The distance of interfering sources to the antenna and antenna line must be at least 11.8 inches (30 mm) and the free space between the antenna and the next wall must be at least 13.78 inches (35 mm). The antenna cable should, under no circumstances, be bent sharply, since irreversible damage may result to the antenna (RG 174 bend radius > 0.6 inches/15mm)

Radio transmitter, EnOcean easyfit PTM 250

Description	Item No.	Pack. Unit	Technical Data
2-channel light	**758-940/001-000**	1	Integrated radio transmitter: EnOcean PTM 200
4-channel light	**758-940/003-000**	1	Energy harvesting source: electrodynamic energy generator, maintenance free
2-channel roller blind	**758-940/002-000**	1	Radio technology /range: EnOcean 868 MHz, RPS Type 2; 300 m free field, typ. 30 m within buildings
4-channel roller blind	**758-940/004-000**	1	Total installation height: 14 mm (frame lies directly against the wall)
			Dimensions of rocker /frame cut-out /central plate: 50 x 50 mm / 55 x 55 mm / 71 x 71 mm
			Color: white

The universal switch insert can be integrated into numerous control programmes by different manufacturers, e.g.: BERKER, GIRA, JUNG and MERTEN. Delivery is without frame. Frames of the desired control programm have been orderen separately.

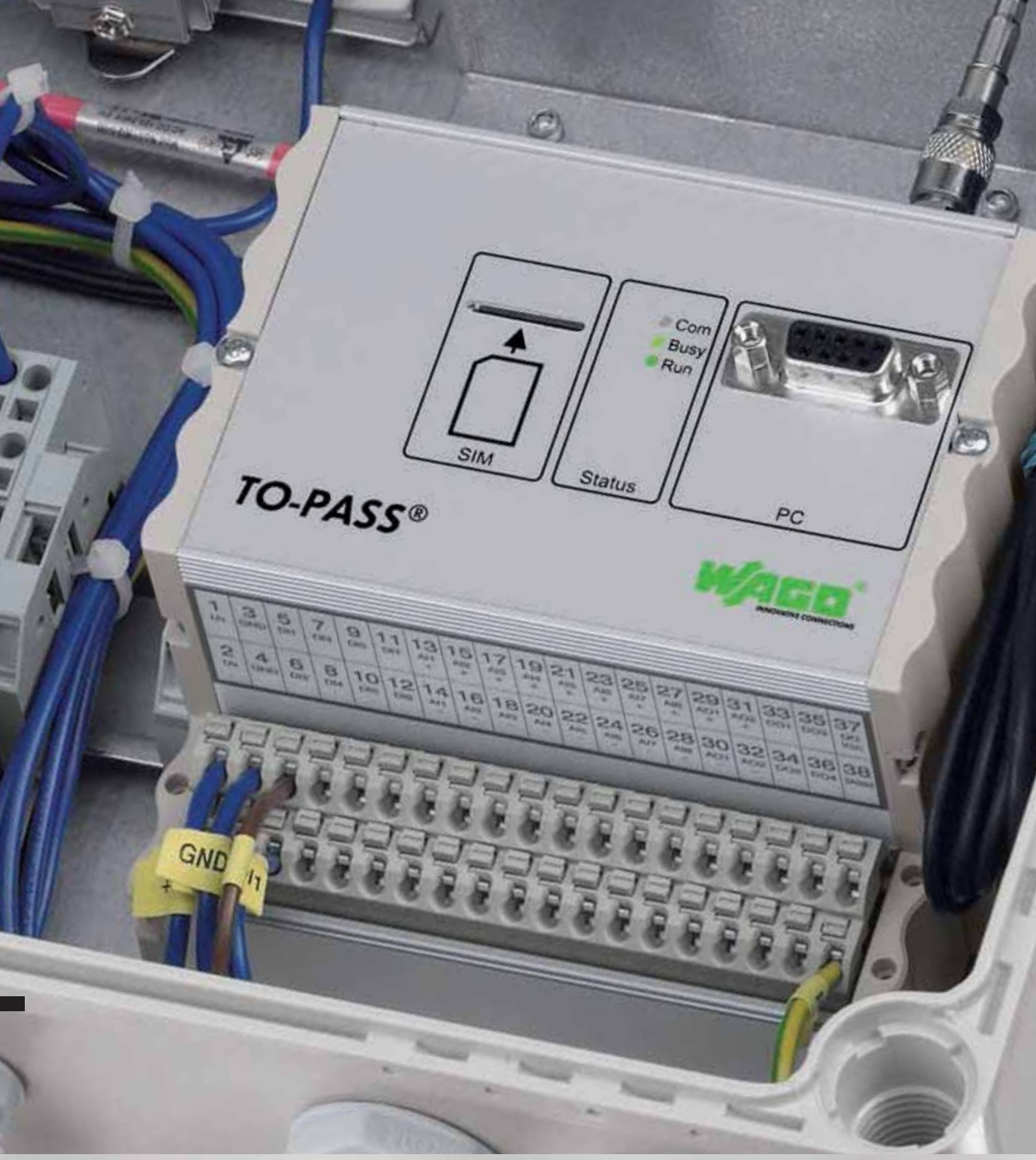

TO-PASS® Telecontrol Technology

◄ Section 3

Controllers

- Programmable fieldbus controllers for telecontrol technology

TO-PASS® Telecontrol Technology

- Telecontrol technology based on GSM/GPRS

Section 8 ►

Radio Technology

- *Bluetooth*®
- WLAN
- EnOcean®

				Page
General Product Information				558
Versions				559
Item Number Keys				560
Interfaces and Configurations				561
Application and Installation Instructions				562
Standards and Rated Conditions				563
	Description		**Item No.**	
	***TO-PASS*® Telecontrol Module,** compact	Compact	761-110	564
		Compact, 2 AI	761-111	565
		Compact, Web	761-112	566
		Compact, 2 AI, Web	761-113	567
		Compact, 2 AI, Web, MODBUS, RS-485	761-114	568
		Compact	761-210	569
		Compact, 8 AI, Event Logger, Data Logger	761-214	570
		Compact, 8 AI, Web, MODBUS	761-216	571
		Compact, 8 AI, Web, MODBUS, RS-485	761-217	572
	***TO-PASS*® Mobile**	4 AI	761-314	573
		4 AI, Web, MODBUS RS-232	761-316	574
	***TO-PASS*® Outdoor**	Outdoor housing	761-9009	575
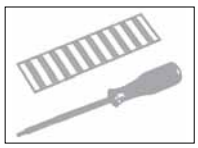	**Accessories**			
	Antenna accessory, USB adapter, serial cable, accumulator			576

Telecontrol Technology – *TO-PASS®*

General Product Information

From Fault Detector to Intelligent Telecontrol PLC

The *TO-PASS®* product series makes it possible to monitor remote objects even in harsh environmental conditions at any time. The devices use the GSM mobile radio network and can communicate wirelessly without data lines or radio links.

Data can be sent to a user-selected destination (e.g., WAGO Web portal) and easily accessed from any browser. Remote access ensures a high degree of system uptime, while simultaneously relieving service personnel from the burden of performing time-consuming, on-site inspections. With an appropriate GSM service provider contract, wireless connection is more efficient and cost-effective than a standard wired connection. *TO-PASS®* Compact modules can be commissioned via configuration tool without programming knowledge, serving as a convenient gateway into wireless communication and telecontrol technology.

Application: Error Message Monitoring
Error messages are recorded locally and reported via SMS, e-mail or fax. Conversely, outputs can be connected via SMS.

Application: Cyclic monitoring
Process data is recorded cyclically, transmitted over the Web via GPRS and saved centrally. All options for analysis and further processing including engagement in the process are available.

Application: Detection and Object Tracking
Using GPS, *TO-PASS®* Mobile makes it possible to capture position and process values. This permits tracking of personnel and vehicles, trip monitoring, fleet management and much more.

Application: Intelligent Telecontrol PLC
The combination of intelligent data preprocessing with integration into the central *TO-PASS®* data storage provides optimal scalability for comprehensive support of even the most complex applications.

Data Collection/Distribution via Web Portal
The *TO-PASS®* Web Portal is an adaptive portal capable of identifying and independently visualizing values from the TO-PASS® Compact modules – no programming required. It makes it easy to view and manage data in a Web browser on the Internet.

Remote Parameterization
All *TO-PASS®* devices can also be configured remotely using the CSD service of the GSM network.

Integrated Position Determination
An integrated GPS receiver allows *TO-PASS®* Mobile devices to detect position within 20 meters and to manage this together with the actual process values. This can be helpful, for example, to record compliance of a cold chain for food transport on land and at sea without interruption.

High Degree of Protection
TO-PASS® Outdoor makes it possible to use the telecontrol modules even under difficult environmental conditions. The enclosure protects against moisture. An integrated UPS bridges power failures and can also, for example, send an error message. The option of integrating enclosure heating extends the unit's operating temperature range, opening it up to additional applications, such as wind power plants. Solar operation also ensures stand-alone use.

Approvals
TO-PASS® devices have a have a broad range of approvals for worldwide telephone networks. That means unrestricted applicability throughout the European Union. There are also approvals for Croatia, Turkey, Singapore, USA, Canada and Mexico. Approvals for other countries are available on request.

- Very easy to use
- Versions for different requirements
- Parameterization without programming knowledge
- Great coverage and availability of the GSM network
- Data collection/distribution via Web portal
- Low ongoing mobile radio costs typically < 10 € / month
- Optional: High degree of protection

Telecontrol Technology – *TO-PASS*®

Versions

TO-PASS® Compact (A)
- Compact telecontrol modules
- With integrated GSM modem
- With integrated I/Os in different configurations
- Message dispatch via SMS, e-mail, fax or over the phone
- Switching of outputs via SMS

TO-PASS® Compact, Event/Process Memory Option (A)
- Same as above
- Also local storage of all status changes
- Also local storage of all process values (cyclic, settable)

TO-PASS® Compact, Web Option (B)
- Same as above
- Also GPRS: permanent online connection to the process
- Allows cyclic data transmission to the *TO-PASS*® Web Portal
- Allows cyclic data transmission to a controller with a fixed IP address that receives and further processes the data using the *TO-PASS*® Web Connector (see Application Notes)
- Allows cyclic data transmission to any PC with a fixed IP address furnished with the *TO-PASS*® communication protocol

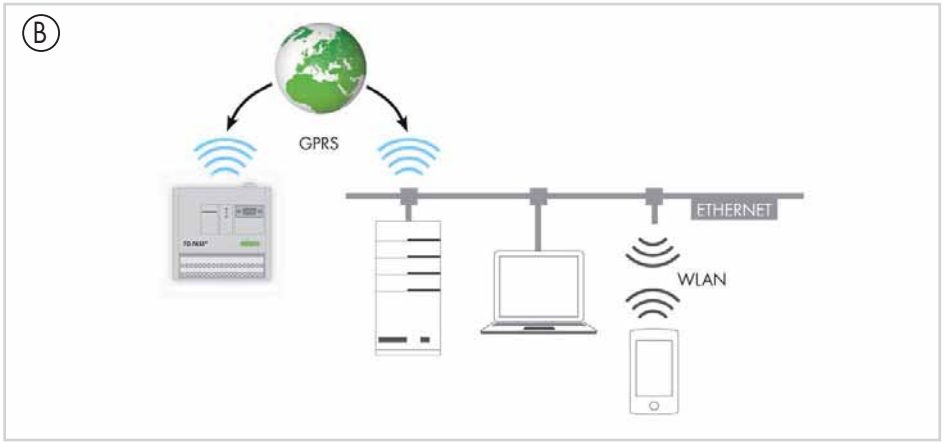

TO-PASS® Compact, MODBUS Option (C)
- Same as above
- Additional option for reading in data via MODBUS, e.g., from the WAGO-I/O-SYSTEM 750
- Connection via RS-232 or RS-485 depending on the version

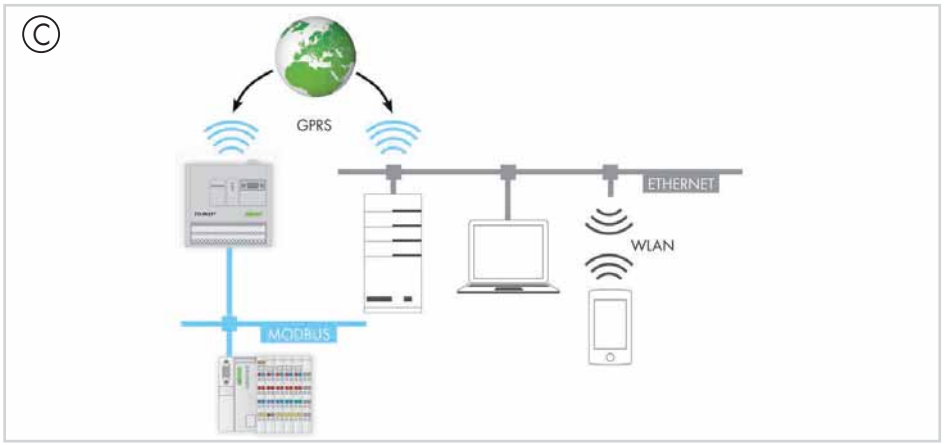

TO-PASS® Mobile (D)
- *Like TO-PASS*® Compact
- Additional option for position determination via GPS

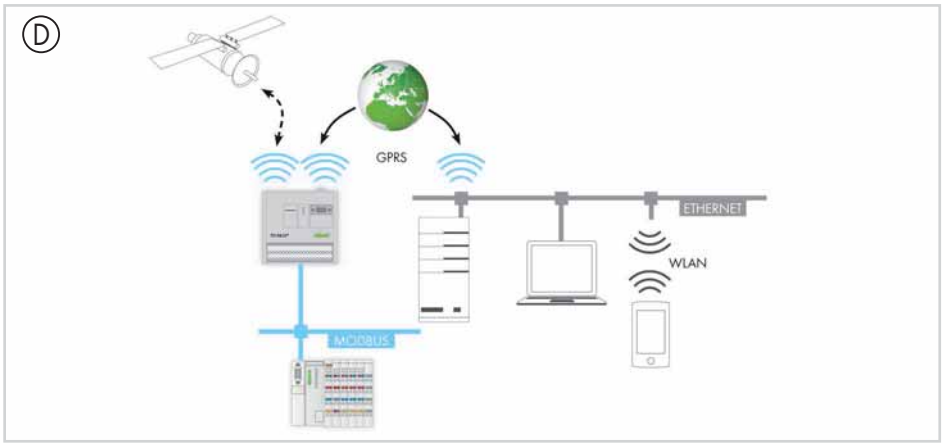

Telecontrol Technology — *TO-PASS*®

Item Number Keys

Explanation of the components for the item number key

Series

Item No. : 761-(x)xxx

1xx: Compact telecontrol module with 4DI, 4DO
2xx: Compact telecontrol module with 8DI, 4DO, 8AI, 2AO
3xx: Mobile telecontrol module with 4AI

x10: standard
x11: Additional 2 AI
x12: Additional Web option
x13: Additional 2 AI + Web option
114: Additional 2 AI + Web option + MODBUS RS-485
214: Additional Event Logger, Data Logger option
x16: Additional Web option + MODBUS RS-232
x17: Additional Web option + MODBUS RS-232

9009: Outdoor unit (without telecontrol module)

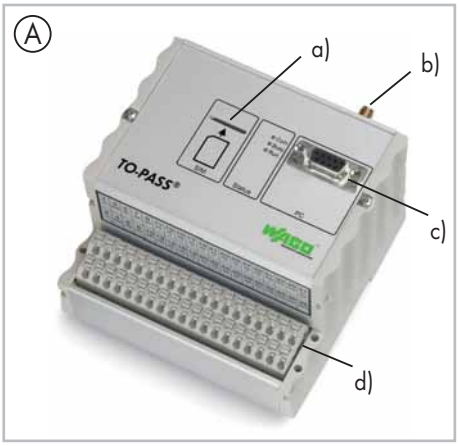

TO-PASS® Compact (A)
- Slot for SIM card (a)
- Antenna connection (b)
- RS-232/-485 serial interface (c)
- I/O connection level (d)
- W x H x L (mm) 109 x 78 x 105
  Height from upper edge of DIN 35 rail

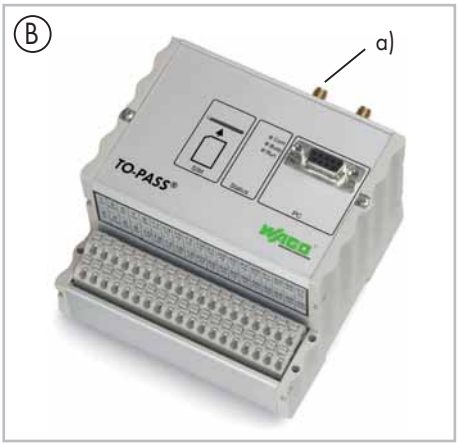

TO-PASS® Mobile (B)
- Like *TO-PASS*® Compact
- Additional antenna connection for GPS receivers (a)

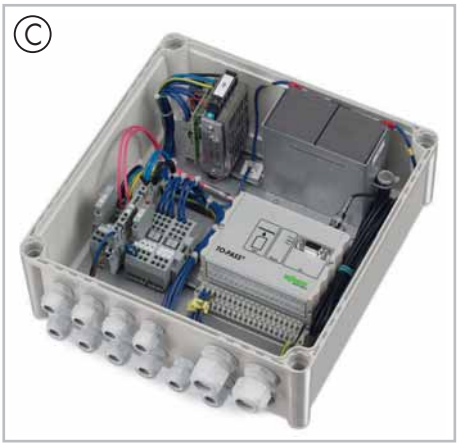

TO-PASS® Outdoor (C)
- Compact unit for mounting telecontrol modules in an IP66 enclosure
- Integrated GSM antenna
- 230 VAC supply voltage
- Power failure protection by batteries
- Option: Temperatures down to -4 °C are possible with built-in heater
- Self-sustaining solar operation mode also available
- W x H x L (mm) 280 x 130 x 310
  incl. cable grips

Manage Data with *TO-PASS*® Web Portal
The *TO-PASS*® Compact and *TO-PASS*® Mobile device versions with Web functionality are able to transmit data cyclically to a central Web server. The process image (i.e., states and values of all digital and analog inputs) is transmitted to the Web server with time stamp at a variably configurable interval and then stored in a database. Standard data loggers and the cumbersome process of reading out data are no longer necessary.

The *TO-PASS*® Web Portal can be used as a Web server.

In addition to simple data storage, it provides password-protected visualization with current process data representation and chart recorder for measured value history. Controlling and managing your data is simplified by using an Internet browser via www.to pass.com. More information on the *TO-PASS*® Web Portal is available in Section 1.

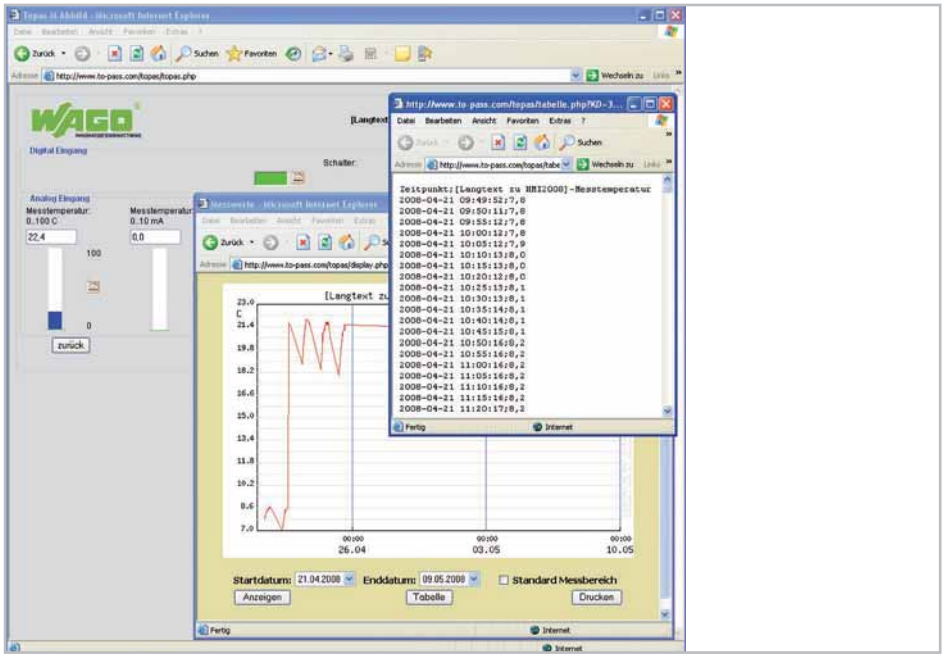

Application: *TO-PASS*® Web Portal as a central Web server with evaluation function

Forward Data with *TO-PASS*® Web Connector
The *TO-PASS*® Web Connector function block is available for easy integration of fault detectors in the control system. Error and event messages are transmitted by GPRS data string via HTTP to a WAGO controller with a fixed IP address. These in turn are capable of passing the data to a central control system via different communication protocols (e.g., MODBUS TCP, BACnet, IEC telecontrol protocols).
Refer to Section 3 for suitable controllers.

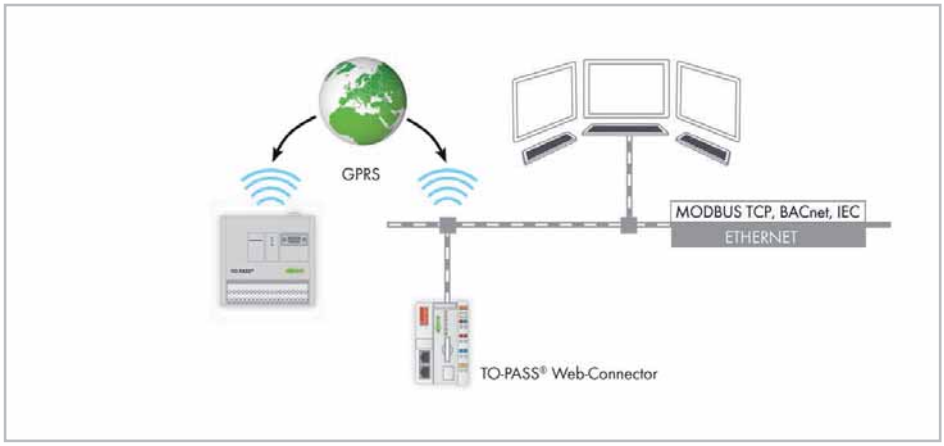

Application: *TO-PASS*® Web Connector as a link between local data and control system

Intelligent Decentralized Data Preprocessing
The combination of a programmable fieldbus controller, connected WAGO-I/O-SYSTEM 750 and *TO-PASS*® are appropriate for telecontrol tasks that require a local controller. Connection to the GPRS is made via a standard router – we can recommend one as needed. Prepared function blocks are available for communication with the *TO-PASS*® Web Portal. These intelligent telecontrol stations can also be fully integrated in the *TO-PASS*® infrastructure for seamlessly adapting into the application environment.

Information on WAGO-I/O-SYSTEM 750 controllers is available in Section 3.

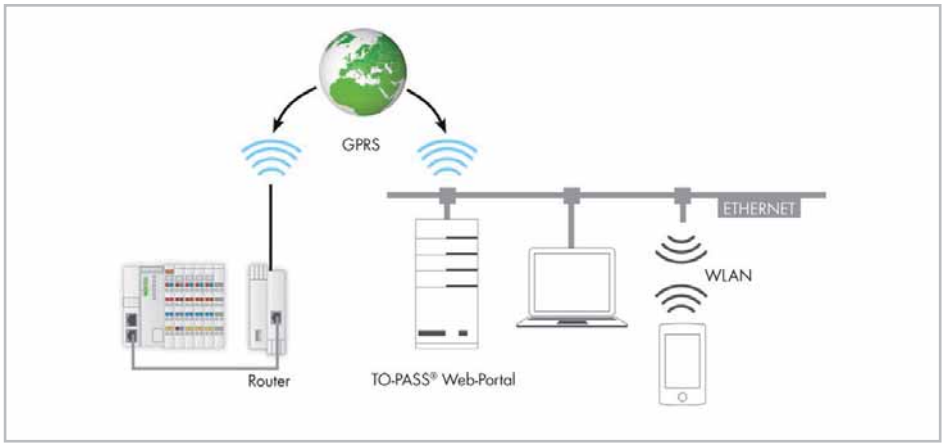

Application: Programmable fieldbus controller with WAGO-I/O-SYSTEM 750 as a data logger and data preprocessor for *TO-PASS*®

General Specifications	
Operating voltage	10–30 VDC
Operating temperature	-20 °C ... +70 °C
Storage temperature	-40 °C ... +85 °C
Relative humidity (without condensation)	95 %
Operating altitude	0 m ... 2000 m
Altitude at storage/transport	0 m ... 15000 m
Degree of contamination	2 acc. to IEC 61131-2
Vibration resistance	4g acc. to IEC 60068-2-6
Shock resistance	15g acc. to IEC 60068-2-27
EMC immunity to interference	EN 61000-6-2
EMC emission of interference	EN 61000-6-3
Protection type	IP20
Type of mounting	on DIN- rail
Mounting position	any
Antenna connection	SMA socket
Connection technology	250 Series Terminal Blocks with PUSH WIRE® connection
Conductor cross-section; stripped lengths	0.5 mm² ... 1.5 mm²/22 ... 14 AWG; 9 mm/0.35 in.

TO-PASS® Compact

Telecontrol module for fault detection/indication, monitoring and remote control

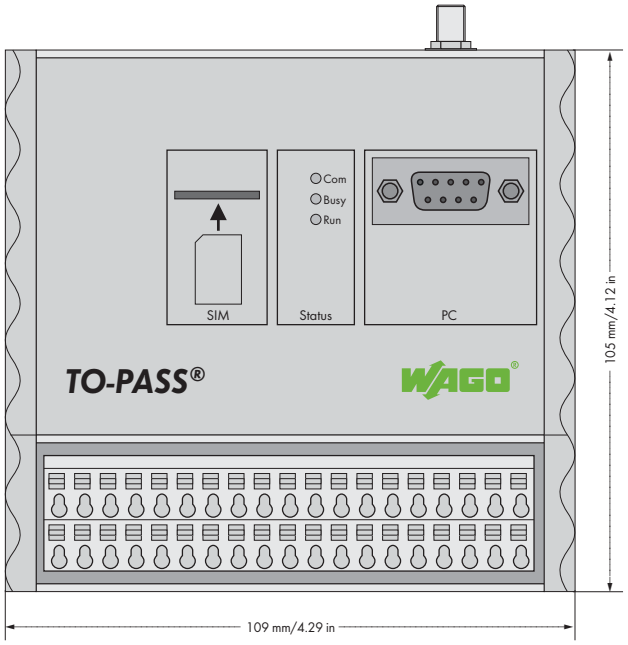

Compact telecontrol module for fault detection/indication and monitoring of machines and installations over a GSM network. The module can be used in many countries via an integrated quad-band GSM modem. Messages are sent via SMS, e-mail, fax or phone call. In addition, the process image can be transmitted in an adjustable cycle to a user-selected Internet address. Switching of outputs is performed via SMS.

4 digital inputs, 4 digital outputs and 2 analog inputs with integrated GSM modem. Ideal for applications in distributed stations for temperatures ranging from -20°C to +70°C. Ability to mount on DIN-rail and intuitive user software make unit easy to handle. Operating voltage ranges from +10V to 30VDC.

Special functions:

- Acknowledgment: Acknowledging any fault message
- Stand-by: Automatic remote switching of the stand-by service
- Remote parametrization: Programming and remote control conveniently performed from the office

Description	Item No.	Pack. Unit
***TO-PASS*® Compact**	**761-110**	1

Accessories	Item No.
Antennas, USB adapter and power supply units	see pages 576 ... 577
***TO-PASS*® Configuration Software**	see Section 1

Approvals	
Approvals	for all EU countries
	Approvals for other countries on request
UL 508	

Technical Data	
Operating temperature	-20 °C ... +70 °C
Type of mounting	DIN 35 rail
Antenna connection	SMA
Wire connection	Terminal strips (WAGO 250 Series)
	with push-wire connection
Cross sections	0.5 mm² ... 1.5 mm² / AWG 22 ... 14
Strip lengths	9 mm /0.35 in
Dimensions (mm) W x H x L	109 x 78 x 105
Weight	412 g
Storage temperature	-40 °C ... +85 °C
Degree of protection	IP20
EMC immunity of interference	acc. to EN 61000-6-2
EMC emission of interference	acc. to EN 61000-6-3

Technical Data	
Digital inputs:	
Number of inputs	4 (Type 3)
Input current	max. 2.9 mA at 30 V DC
Signal voltage (0)	0 V ... 5 V DC
Signal voltage (1)	7 V ... 30 V DC
Digital outputs:	
No. of outputs	4 contacts
Output current (max.)	0.5 A/ 30 V DC, short-circuit protected
Communication	GSM quad-band
Communication types	SMS (bidirectional),
	telecommunication dial-up connection
	(CSD)
Signaling	3 LEDs for operating status indication
Operating voltage	+10 V ... +30 V DC
Closed current	approx. 20 mA at +24V operating voltage
Current during transmission	< 500 mA at +24V operating voltage

TO-PASS® Compact, 2 AI

Telecontrol module for fault detection/indication, monitoring and remote control

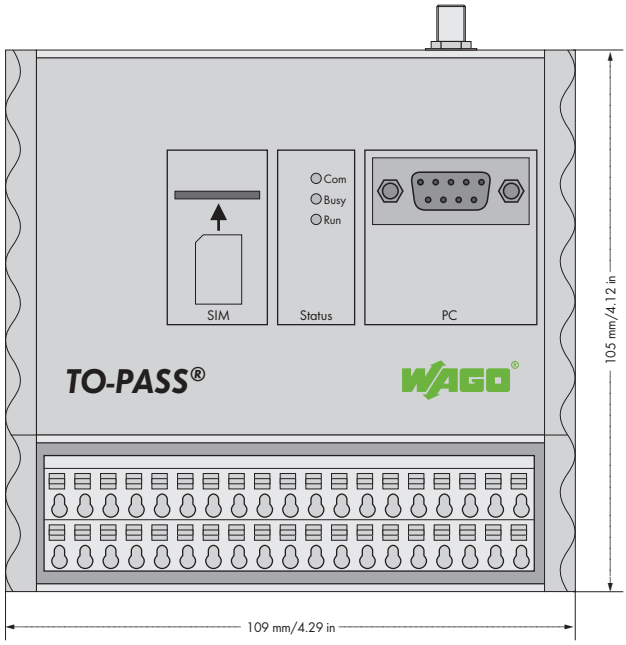

Compact telecontrol module for fault detection/indication and monitoring of machines and installations over a GSM network. The module can be used in many countries via an integrated quad-band GSM modem. Messages are sent via SMS, e-mail, fax or phone call. Switching of outputs is performed via SMS. 4 digital inputs, 4 digital outputs and 2 analog inputs with integrated GSM modem. Ideal for applications in distributed stations for temperatures ranging from -20 °C to +70 °C. Ability to mount on DIN-rail and intuitive user software make unit easy to handle. Operating voltage ranges from +10V to 30VDC.

Special functions:

- Acknowledgment: Acknowledging any fault message
- Stand-by: Automatic remote switching of the stand-by service
- Remote parametrization: Programming and remote control conveniently performed from the office

Description	Item No.	Pack. Unit
***TO-PASS*® Compact, 2 AI**	**761-111**	1

Accessories	Item No.
Antennas, USB adapter and power supply units	see pages 576 ... 577
***TO-PASS*® Configuration Software**	see Section 1

Approvals

Approvals	for all EU countries
	Approvals for other countries on request
UL 508	

Technical Data

Operating temperature	-20 °C ... +70 °C
Type of mounting	DIN 35 rail
Antenna connection	SMA
Wire connection	Terminal strips (WAGO 250 Series)
	with push-wire connection
Cross sections	0.5 mm² ... 1.5 mm² / AWG 22 ... 14
Strip lengths	9 mm /0.35 in
Dimensions (mm) W x H x L	109 x 78 x 105
Weight	412 g
Storage temperature	-40 °C ... +85 °C
Degree of protection	IP20
EMC immunity of interference	acc. to EN 61000-6-2
EMC emission of interference	acc. to EN 61000-6-3

Technical Data

Digital inputs:	
Number of inputs	4 (Type 3)
Input current	max. 2.9 mA at 30 V DC
Signal voltage (0)	0 V ... 5 V DC
Signal voltage (1)	7 V ... 30 V DC
Analog inputs:	
Number of inputs	2 (0/4 mA ... 20 mA)
Internal resistance	approx. 200 Ω / 20 mA
Measuring error (25 °C)	< ± 1 % of the full scale value
Temperature coefficient	< ± 0.1 % / K of the full scale value
Digital outputs:	
No. of outputs	4 contacts
Output current (max.)	0.5 A/ 30 V DC, short-circuit protected
Communication	GSM quad-band
Communication types	SMS (bidirectional),
	telecommunication dial-up connection
	(CSD)
Signaling	3 LEDs for operating status indication
Operating voltage	+10 V ... +30 V DC
Closed current	approx. 20 mA at +24V operating voltage
Current during transmission	< 500 mA at +24V operating voltage

TO-PASS® Compact, WEB

Telecontrol module for fault detection/indication, monitoring and remote control

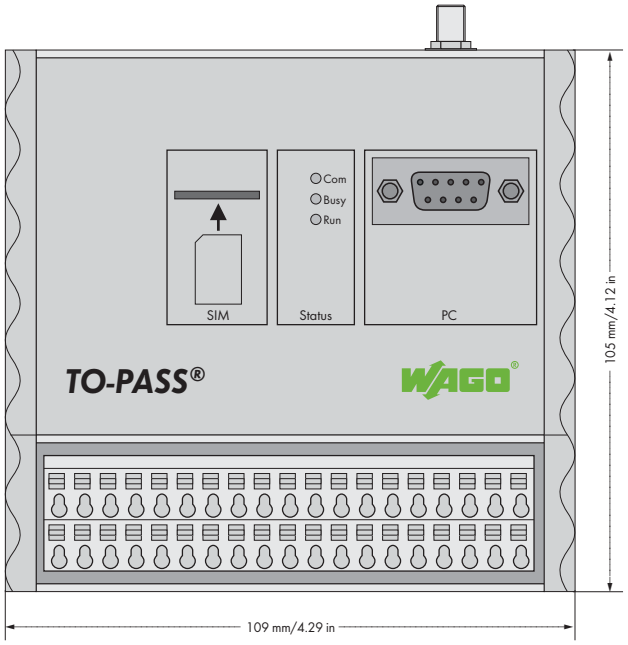

Compact telecontrol module for fault detection/indication and Internet connectivity for machines and installations over a GSM network. The module can be used in many countries via an integrated quad-band GSM modem. Messages are sent via SMS, e-mail, fax or phone call. In addition, the process image can be transmitted in an adjustable cycle to a user-selected Internet address. Switching of outputs is performed via SMS.
4 digital inputs and 4 digital outputs with integrated GSM modem. Ideal for applications in distributed stations for temperatures ranging from -20 °C to +70 °C. Ability to mount on DIN-rail and intuitive user software make unit easy to handle. Operating voltage ranges from +10V to 30VDC.

Special functions:

- Acknowledgment: Acknowledging any fault message
- Stand-by: Automatic remote switching of the stand-by service
- Remote parametrization: Programming and process visualization conveniently performed from the office
- GPRS-dedicated line: Permanent online connection to the process on a WEB server or PC with fixed IP address (e.g., DSL connection)

Description	Item No.	Pack. Unit
***TO-PASS*® Compact, WEB**	**761-112**	1

Accessories	Item No.
Antennas, USB adapter and power supply units	see pages 576 ... 577
***TO-PASS*® Configuration Software**	see Section 1
***TO-PASS*® Web Portal**	see Section 1

Approvals	
Approvals	for all EU countries
	Approvals for other countries on request
UL 508	

Technical Data	
Operating temperature	-20 °C ... +70 °C
Type of mounting	DIN 35 rail
Antenna connection	SMA
Wire connection	Terminal strips (WAGO 250 Series)
	with push-wire connection
Cross sections	0.5 mm² ... 1.5 mm² / AWG 22 ... 14
Strip lengths	9 mm /0.35 in
Dimensions (mm) W x H x L	109 x 78 x 105
Weight	412 g
Storage temperature	-40 °C ... +85 °C
Degree of protection	IP20
EMC immunity of interference	acc. to EN 61000-6-2
EMC emission of interference	acc. to EN 61000-6-3

Technical Data	
Digital inputs:	
Number of inputs	4 (Type 3)
Input current	max. 2.9 mA at 30 V DC
Signal voltage (0)	0 V ... 5 V DC
Signal voltage (1)	7 V ... 30 V DC
Digital outputs:	
No. of outputs	4 contacts
Output current (max.)	0.5 A/ 30 V DC, short-circuit protected
Communication	GSM quad-band
Communication types	SMS (bidirectional),
	telecommunication dial-up connection
	(CSD)
	GPRS connection to Internet
Signaling	3 LEDs for operating status indication
Operating voltage	+10 V ... +30 V DC
Closed current	approx. 20 mA at +24V operating voltage
Current during transmission	< 500 mA at +24V operating voltage

TO-PASS® Compact, 2 AI, WEB

Telecontrol module for fault detection/indication, monitoring and remote control

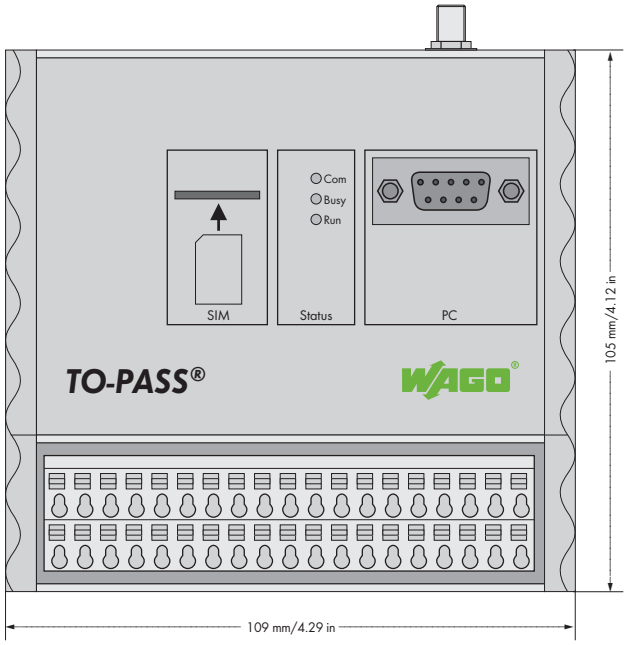

Compact telecontrol module for fault detection/indication and Internet connectivity for machines and installations over a GSM network. The module can be used in many countries via an integrated quad-band GSM modem. Messages are sent via SMS, e-mail, fax or phone call. In addition, the process image can be transmitted in an adjustable cycle to a user-selected Internet address. Switching of outputs is performed via SMS.
4 digital inputs, 4 digital outputs and 2 analog inputs with integrated GSM modem. Ideal for applications in distributed stations for temperatures ranging from -20 °C to +70 °C. Ability to mount on DIN-rail and intuitive user software make unit easy to handle. Operating voltage ranges from +10V to 30VDC.

Special functions:

- Acknowledgment: Acknowledging any fault message
- Stand-by: Automatic remote switching of the stand-by service
- Remote parametrization: Programming and process visualization conveniently performed from the office
- GPRS-dedicated line: Permanent online connection to the process on a WEB server or PC with fixed IP address (e.g., DSL connection)

Description	Item No.	Pack. Unit
***TO-PASS*® Compact, 2 AI, WEB**	**761-113**	1

Accessories	Item No.
Antennas, USB adapter and power supply units	see pages 576 ... 577
***TO-PASS*® Configuration Software**	see Section 1
***TO-PASS*® Web Portal**	see Section 1

Approvals	
Approvals	for all EU countries
	Approvals for other countries on request
cULus UL 508	

Technical Data	
Operating temperature	-20 °C ... +70 °C
Type of mounting	DIN 35 rail
Antenna connection	SMA
Wire connection	Terminal strips (WAGO 250 Series)
	with push-wire connection
Cross sections	0.5 mm² ... 1.5 mm² / AWG 22 ... 14
Strip lengths	9 mm /0.35 in
Dimensions (mm) W x H x L	109 x 78 x 105
Weight	412 g
Storage temperature	-40 °C ... +85 °C
Degree of protection	IP20
EMC immunity of interference	acc. to EN 61000-6-2
EMC emission of interference	acc. to EN 61000-6-3

Technical Data	
Digital inputs:	
Number of inputs	4 (Type 3)
Input current	max. 2.9 mA at 30 V DC
Signal voltage (0)	0 V ... 5 V DC
Signal voltage (1)	7 V ... 30 V DC
Analog inputs:	
Number of inputs	2 (0/4 mA ... 20 mA)
Internal resistance	approx. 200 Ω / 20 mA
Measuring error (25 °C)	< ± 1 % of the full scale value
Temperature coefficient	< ± 0.1 % / K of the full scale value
Digital outputs:	
No. of outputs	4 contacts
Output current (max.)	0.5 A/ 30 V DC, short-circuit protected
Communication	GSM quad-band
Communication types	SMS (bidirectional),
	telecommunication dial-up connection
	(CSD)
	GPRS connection to Internet
Signaling	3 LEDs for operating status indication
Operating voltage	+10 V ... +30 V DC
Closed current	approx. 20 mA at +24V operating voltage
Current during transmission	< 500 mA at +24V operating voltage

TO-PASS® Compact, 2 AI, Web, MODBUS, RS-485

Telecontrol module for fault detection/indication, monitoring and remote control

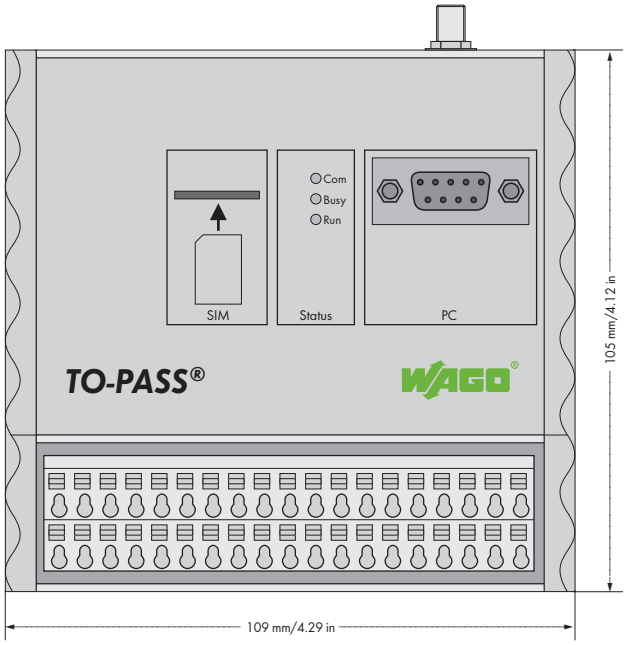

Compact telecontrol module provides fault detection/indication and Internet connectivity for machines and installations over a GSM network. The module can be used in many countries via an integrated quad-band GSM modem. Messages are sent via SMS, e-mail, fax or phone call. In addition, the process image can be transmitted in an adjustable cycle to a user-selected Internet address. A MODBUS slave (e.g., 750-815) can be connected via RS-485 interface to link additional process values. Switching of outputs is performed via SMS or TO-PASS® Web Portal.
The module is equipped with 4 digital inputs, 4 analog outputs and 2 digital inputs, including an integrated GSM modem. Ideal for applications in distributed stations for temperatures ranging from -20 °C to +70 °C.
Ability to mount on DIN-rail and intuitive user software make unit easy to use.

Operating voltage ranges from +10 to +30 VDC.

Specialty functions:

- Acknowledgement: Any fault message
- Stand-by: Automatic remote switching of stand-by service
- Remote parameterization: Programming and process visualization conveniently performed from the office
- GPRS-dedicated line: Permanent online connection to the process on a Web server or PC with fixed IP address (e.g., DSL connection)
- Counter function: Maximum four of the digital inputs can be used as up or down counter. The maximum operating frequency is 1250 Hz.

Description	Item No.	Pack. Unit
***TO-PASS*® Compact, 2 AI, Web, MODBUS, RS-485**	**761-114**	1

Accessories	Item No.
Antennas, USB adapter and power supply units	see pages 576 ... 577
***TO-PASS*® Configuration Software**	see Section 1
***TO-PASS*® Web Portal**	see Section 1

Approvals	
Approvals	for all EU countries
	Approvals for other countries on request
UL 508	pending

Technical Data	
Operating temperature	-20 °C ... +70 °C
Type of mounting	DIN 35 rail
Antenna connection	SMA
Wire connection	Terminal strips (WAGO 250 Series)
	with PUSH WIRE® connection
Cross sections	0.5 mm² ... 1.5 mm² / AWG 22 ... 14
Strip lengths	9 mm /0.35 in
Dimensions (mm) W x H x L	109 x 78 x 105
Weight	412 g
Storage temperature	-40 °C ... +85 °C
Degree of protection	IP20
EMC immunity of interference	acc. to EN 61000-6-2
EMC emission of interference	acc. to EN 61000-6-3

Technical Data	
MODBUS	
Transmission modes	RS-485 (2-conductor), RTU Master
Baud rate	9.6 and 19.2 kbaud
	(8N1, 8E1, 8O1, 8N1)
Read-out register	max. 64 registers (input or holding)
Digital inputs:	
Number of inputs	4 (Type 3)
Input current	max. 2.9 mA at 30 V DC
Signal voltage (0)	0 V ... 5 V DC
Signal voltage (1)	7 V ... 30 V DC
Analog inputs:	
Number of inputs	2 (0/4 mA ... 20 mA)
Internal resistance	approx. 200 Ω / 20 mA
Measuring error (25 °C)	< ± 1 % of the full scale value
Temperature coefficient	< ± 0.1 % / K of the full scale value
Digital outputs:	
No. of outputs	4 contacts
Output current (max.)	0.5 A/ 30 V DC, short-circuit protected
Analog outputs:	
Measuring error (25 °C)	< ± 1 % of the full scale value
Temperature coefficient	< ± 0.1 % / K of the full scale value
Communication	GSM quad-band
Communication types	SMS (bidirectional),
	telecommunication dial-up connection
	(CSD)
	GPRS connection to Internet
Signaling	3 LEDs for operating status indication
Operating voltage	+10 V ... +30 V DC
Closed current	approx. 20 mA at +24V operating voltage
Current during transmission	< 500 mA at +24V operating voltage

TO-PASS® Compact

Telecontrol module for fault detection/indication, monitoring and remote control

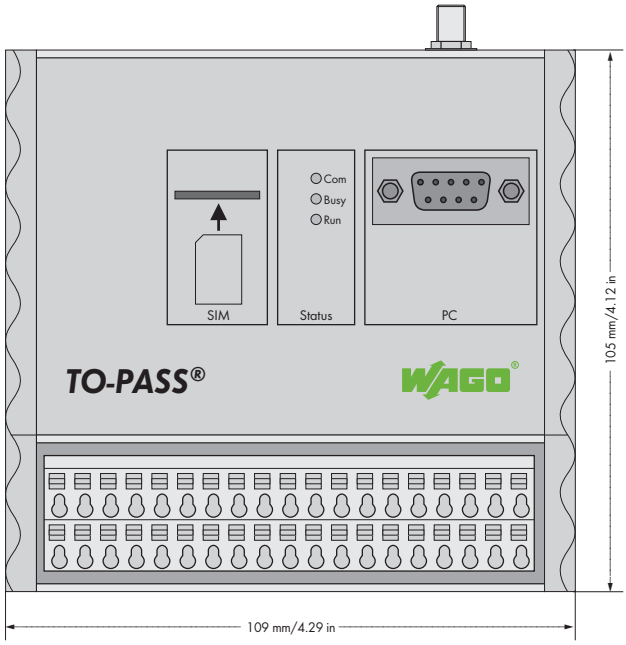

Universal telecontrol module for fault detection/indication and monitoring of machines and installations over a GSM network. The module can be used in many countries via an integrated quad-band GSM modem. Messages are sent via SMS, e-mail, fax or phone call. Switching of outputs is performed via SMS. 8 digital inputs, 4 digital outputs with integrated GSM modem. Ideal for applications in distributed stations for temperatures ranging from -20°C to +70°C. Ability to mount on DIN-rail and intuitive user software make unit easy to handle. Operating voltage ranges from +10V to 30VDC.

Special functions:

- Acknowledgment: Acknowledging any fault message
- Stand-by: Automatic remote switching of the stand-by service
- Remote parametrization: Programming and remote control conveniently performed from the office

Description	Item No.	Pack. Unit
***TO-PASS*® Compact**	**761-210**	1

Accessories	Item No.
Antennas, USB adapter and power supply units	see pages 576 ... 577
***TO-PASS*® Configuration Software**	see Section 1

Approvals	
Approvals	for all EU countries
	Approvals for other countries on request
cULus UL 508	

Technical Data	
Operating temperature	-20 °C ... +70 °C
Type of mounting	DIN 35 rail
Antenna connection	SMA
Wire connection	Terminal strips (WAGO 250 Series)
	with push-wire connection
Cross sections	0.5 mm² ... 1.5 mm² / AWG 22 ... 14
Strip lengths	9 mm /0.35 in
Dimensions (mm) W x H x L	109 x 78 x 105
Weight	412 g
Storage temperature	-40 °C ... +85 °C
Degree of protection	IP20
EMC immunity of interference	acc. to EN 61000-6-2
EMC emission of interference	acc. to EN 61000-6-3

Technical Data	
Digital inputs:	
Number of inputs	8 (Type 3)
Input current	max. 2.9 mA at 30 V DC
Signal voltage (0)	0 V ... 5 V DC
Signal voltage (1)	7 V ... 30 V DC
Digital outputs:	
No. of outputs	4 contacts
Output current (max.)	0.5 A/ 30 V DC, short-circuit protected
Communication	GSM quad-band
Communication types	SMS (bidirectional),
	telecommunication dial-up connection
	(CSD)
Signaling	3 LEDs for operating status indication
Operating voltage	+10 V ... +30 V DC
Closed current	approx. 20 mA at +24V operating voltage
Current during transmission	< 500 mA at +24V operating voltage

TO-PASS® Compact, 8 AI, ELog, DLog

Telecontrol module for fault detection/indication, monitoring and remote control

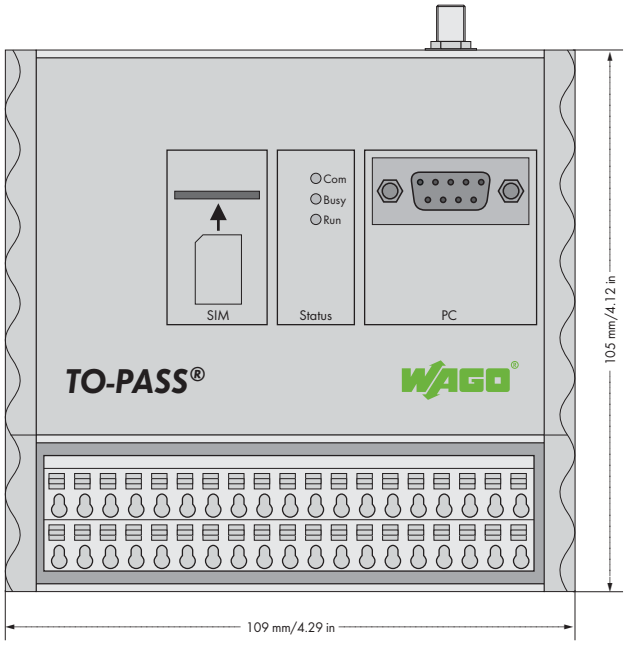

Universal telecontrol module for fault detection/indication and monitoring of machines and installations over a GSM network. The module can be used in many countries via an integrated quad-band GSM modem. Messages are sent via SMS, e-mail, fax or phone call. An integrated event logger creates the process image of all occurring events and stores all digital and analog values available at the telecontrol module. The data memory stores up to 4096 process images in an adjustable cycle time. Switching of outputs is performed via SMS.
8 digital inputs, 8 analog inputs, 4 digital outputs and 2 analog outputs with integrated GSM modem. Ideal for applications in distributed stations for temperatures ranging from -20 °C to +70 °C. Ability to mount on DIN-rail and intuitive user software make unit easy to handle.

Operating voltage ranges from +10V to 30VDC.

Special functions:

- Acknowledgment: Acknowledging any fault message
- Stand-by: Automatic remote switching of the stand-by service
- Remote parametrization: Programming and remote control conveniently performed from the office
- Event logger: Saves all occurring status changes
- Data logger: Saves all process values with adjustable cycle

Description	Item No.	Pack. Unit
***TO-PASS*® Compact, 8 AI, ELog, DLog**	**761-214**	1

Accessories	Item No.
Antennas, USB adapter and power supply units	see pages 576 ... 577
***TO-PASS*® Configuration Software**	see Section 1

Approvals

Approvals	for all EU countries
	Approvals for other countries on request
UL 508	

Technical Data

Operating temperature	-20 °C ... +70 °C
Type of mounting	DIN 35 rail
Antenna connection	SMA
Wire connection	Terminal strips (WAGO 250 Series)
	with push-wire connection
Cross sections	0.5 mm² ... 1.5 mm² / AWG 22 ... 14
Strip lengths	9 mm /0.35 in
Dimensions (mm) W x H x L	109 x 78 x 105
Weight	412 g
Storage temperature	-40 °C ... +85 °C
Degree of protection	IP20
EMC immunity of interference	acc. to EN 61000-6-2
EMC emission of interference	acc. to EN 61000-6-3

Technical Data	
Digital inputs:	
Number of inputs	8 (Type 3)
Input current	max. 2.9 mA at 30 V DC
Signal voltage (0)	0 V ... 5 V DC
Signal voltage (1)	7 V ... 30 V DC
Analog inputs:	
Number of inputs	8 (0/4 mA ... 20 mA)
Internal resistance	approx. 200 Ω / 20 mA
Measuring error (25 °C)	< ± 1 % of the full scale value
Temperature coefficient	< ± 0.1 % / K of the full scale value
Digital outputs:	
No. of outputs	4 contacts
Output current (max.)	0.5 A/ 30 V DC, short-circuit protected
Analog outputs:	
No. of outputs	2 (0/4 mA ... 20 mA)
Load impedance	≤ 600 Ω
Measuring error (25 °C)	< ± 1 % of the full scale value
Temperature coefficient	< ± 0.1 % / K of the full scale value
Communication	GSM quad-band
Communication types	SMS (bidirectional),
	telecommunication dial-up connection
	(CSD)
Signaling	3 LEDs for operating status indication
Operating voltage	+10 V ... +30 V DC
Closed current	approx. 20 mA at +24V operating voltage
Current during transmission	< 500 mA at +24V operating voltage

TO-PASS® Compact, 8 AI, WEB, MODBUS

Telecontrol module for fault detection/indication, monitoring and remote control

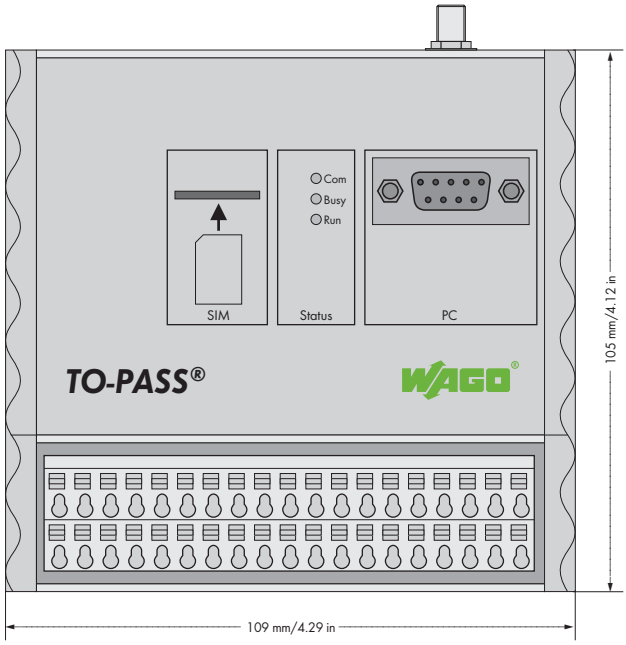

Universal telecontrol module for fault detection/indication and Internet connectivity for machines and installations over a GSM network. The module can be used in many countries via an integrated quad-band GSM modem. Messages are sent via SMS, e-mail, fax or phone call. The data memory stores up to 4096 process images in an adjustable cycle time. In addition, the process image can be transmitted in an adjustable cycle to a user-selected Internet address. A Modbus slave (e.g., 750-816) can be connected via RS-232 interface to link additional process values. Switching of outputs is performed via SMS.
8 digital inputs, 8 analog inputs, 4 digital outputs and 2 analog outputs with integrated GSM modem. Ideal for applications in distributed stations for temperatures ranging from -20 °C to +70 °C.

Ability to mount on DIN-rail and intuitive user software make unit easy to handle. Operating voltage ranges from +10V to 30VDC.

Special functions:

- Acknowledgment: Acknowledging any fault message
- Stand-by: Automatic remote switching of the stand-by service
- Remote parametrization: Programming and process visualization conveniently performed from the office
- GPRS-dedicated line: Permanent online connection to the process on a WEB server or PC with fixed IP address (e.g., DSL connection)
- Event logger: Saves all occurring status changes
- Data logger: Saves all process values with adjustable cycle

Description	Item No.	Pack. Unit
***TO-PASS*® Compact, 8 AI, WEB, MODBUS**	**761-216**	1

Accessories	Item No.
Antennas, USB adapter and power supply units	see pages 576 ... 577
***TO-PASS*® Configuration Software**	see Section 1
***TO-PASS*® Web Portal**	see Section 1

Approvals	
Approvals	for all EU countries
	Approvals for other countries on request
cULus UL 508	

Technical Data	
Operating temperature	-20 °C ... +70 °C
Type of mounting	DIN 35 rail
Antenna connection	SMA
Wire connection	Terminal strips (WAGO 250 Series)
	with push-wire connection
Cross sections	0.5 mm² ... 1.5 mm² / AWG 22 ... 14
Strip lengths	9 mm /0.35 in
Dimensions (mm) W x H x L	109 x 78 x 105
Weight	412 g
Storage temperature	-40 °C ... +85 °C
Degree of protection	IP20
EMC immunity of interference	acc. to EN 61000-6-2
EMC emission of interference	acc. to EN 61000-6-3

Technical Data	
Digital inputs:	
Number of inputs	8 (Type 3)
Input current	max. 2.9 mA at 30 V DC
Signal voltage (0)	0 V ... 5 V DC
Signal voltage (1)	7 V ... 30 V DC
Analog inputs:	
Number of inputs	8 (0/4 mA ... 20 mA)
Internal resistance	approx. 200 Ω / 20 mA
Measuring error (25 °C)	< ± 1 % of the full scale value
Temperature coefficient	< ± 0.1 % / K of the full scale value
Digital outputs:	
No. of outputs	4 contacts
Output current (max.)	0.5 A/ 30 V DC, short-circuit protected
Analog outputs:	
No. of outputs	2 (0/4 mA ... 20 mA)
Load impedance	≤ 600 Ω
Measuring error (25 °C)	< ± 1 % of the full scale value
Temperature coefficient	< ± 0.1 % / K of the full scale value
Communication	GSM quad-band
Communication types	SMS (bidirectional),
	telecommunication dial-up connection
	(CSD)
	GPRS connection to Internet
Signaling	3 LEDs for operating status indication
Operating voltage	+10 V ... +30 V DC
Closed current	approx. 20 mA at +24V operating voltage
Current during transmission	< 500 mA at +24V operating voltage

TO-PASS® Compact, 8 AI, Web, MODBUS, RS-485

Telecontrol module for fault detection/indication, monitoring and remote control

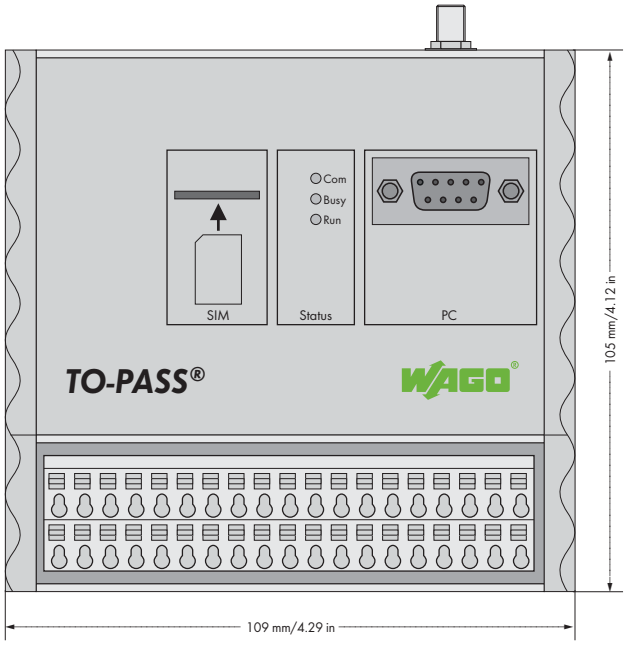

Universal telecontrol module for fault detection/indication and Internet connectivity for machines and installations over a GSM network. The module can be used in many countries via an integrated quad-band GSM modem. Messages are sent via SMS, e-mail, fax or phone call. The data memory stores up to 4096 process images in an adjustable cycle time. In addition, the process image can be transmitted in an adjustable cycle to a user-selected Internet address. A MODBUS slave (e.g., 750-815) can be connected via RS-485 interface to link additional process values. Switching of outputs is performed via SMS or TO-PASS® Web Portal.
The module is equipped with 8 digital inputs, 8 analog inputs, 4 digital outputs and 2 analog outputs, including an integrated GSM modem. Ideal for applications in distributed stations for temperatures ranging from -20 °C to +70 °C. Ability to mount on DIN-rail and intuitive user software make unit easy to handle. Operating voltage ranges from +10 to +30 VDC.

Specialty functions:
- Acknowledgment: Acknowledging any fault message
- Stand-by: Automatic remote switching of stand-by service
- Remote parameterization: Programming and process visualization conveniently performed from the office
- GPRS-dedicated line: Permanent online connection to the process on a WEB server or PC with fixed IP address (e.g., DSL connection)
- Event logger: Saves all occurring status changes
- Data logger: Saves all process values with adjustable cycle
- Counter function: Maximum four of the digital inputs can be used as up or down counter. The maximum operating frequency is 1250 Hz.

Description	Item No.	Pack. Unit
***TO-PASS*® Compact, 8 AI, Web, MODBUS, RS-485**	**761-217**	1

Accessories	Item No.
Antennas, USB adapter and power supply units	see pages 576 ... 577
***TO-PASS*® Configuration Software**	see Section 1
***TO-PASS*® Web Portal**	see Section 1

Approvals	
Approvals	for all EU countries
	Approvals for other countries on request
cULus UL 508	pending

Technical Data	
Operating temperature	-20 °C ... +70 °C
Type of mounting	DIN 35 rail
Antenna connection	SMA
Wire connection	Terminal strips (WAGO 250 Series)
	with PUSH WIRE® connection
Cross sections	0.5 mm² ... 1.5 mm² / AWG 22 ... 14
Strip lengths	9 mm /0.35 in
Dimensions (mm) W x H x L	109 x 78 x 105
Weight	412 g
Storage temperature	-40 °C ... +85 °C
Degree of protection	IP20
EMC immunity of interference	acc. to EN 61000-6-2
EMC emission of interference	acc. to EN 61000-6-3

Technical Data	
MODBUS	
Transmission modes	RS-485 (2-conductor), RTU Master
Baud rate	9.6 and 19.2 kbaud
	(8N1, 8E1, 8O1, 8N1)
Read-out register	max. 64 registers (input or holding)
Digital inputs:	
Number of inputs	8 (Type 3)
Input current	max. 2.9 mA at 30 V DC
Signal voltage (0)	0 V ... 5 V DC
Signal voltage (1)	7 V ... 30 V DC
Analog inputs:	
Number of inputs	8 (0/4 mA ... 20 mA)
Internal resistance	approx. 200 Ω / 20 mA
Measuring error (25 °C)	< ± 1 % of the full scale value
Temperature coefficient	< ± 0.1 % / K of the full scale value
Digital outputs:	
No. of outputs	4 contacts
Output current (max.)	0.5 A/ 30 V DC, short-circuit protected
Analog outputs:	
No. of outputs	2 (0/4 mA ... 20 mA)
Load impedance	≤ 600 Ω
Measuring error (25 °C)	< ± 1 % of the full scale value
Temperature coefficient	< ± 0.1 % / K of the full scale value
Communication	GSM quad-band
Communication types	SMS (bidirectional),
	telecommunication dial-up connection
	(CSD)
	GPRS connection to Internet
Signaling	3 LEDs for operating status indication
Operating voltage	+10 V ... +30 V DC
Closed current	approx. 20 mA at +24V operating voltage
Current during transmission	< 500 mA at +24V operating voltage

TO-PASS® Mobile, 4 AI

Telecontrol module for fault detection/indication, position monitoring and remote control

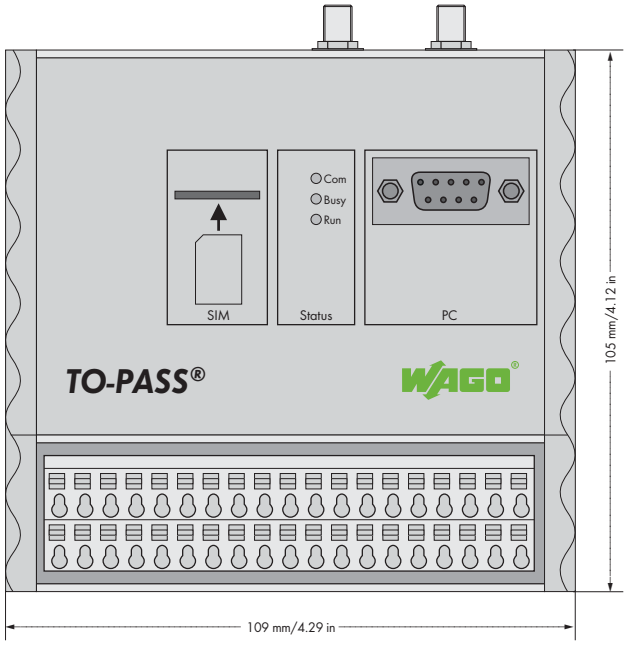

Universal telecontrol module for fault detection/indication and position monitoring of machines and products over a GSM network. The module can be used in many countries via an integrated quad-band GSM modem. Messages are sent via SMS, e-mail, fax or phone call. The data memory stores up to 4096 process images in an adjustable cycle time. Switching of outputs is performed via SMS.
The module is equipped with 4 digital inputs, 4 analog inputs, 2 digital outputs and GPS position data, including an integrated GSM modem. Ideal for applications in distributed stations for temperatures ranging from -20°C to +70°C. Ability to mount on DIN-rail and intuitive user software make unit easy to handle. Operating voltage +10V ... +30V DC.

Special functions:
- Acknowledgment: Acknowledging any fault message
- Stand-by: Automatic remote switching of the stand-by service
- Remote parameterization: Programming and remote control conveniently performed from the office
- Event logger: Saves all occurring status changes
- Data logger: Saves all process values with adjustable cycle

Description	Item No.	Pack. Unit
***TO-PASS*® Mobile, 4 AI**	**761-314**	1

Accessories	Item No.
Antennas, USB adapter and power supply units	see pages 576 ... 577
***TO-PASS*® Configuration Software**	see Section 1

Approvals	
Approvals	for all EU countries
	Approvals for other countries on request

Technical Data	
Operating temperature	-20 °C ... +70 °C
Type of mounting	DIN 35 rail
Antenna connection	SMA socket (for both GSM and GPS)
Wire connection	Terminal strips (WAGO 250 Series)
	with push-wire connection
Cross sections	0.5 mm² ... 1.5 mm² / AWG 22 ... 14
Strip lengths	9 mm /0.35 in
Dimensions (mm) W x H x L	109 x 78 x 105
Weight	412 g
Storage temperature	-40 °C ... +85 °C
Degree of protection	IP20
EMC immunity of interference	acc. to EN 61000-6-2
EMC emission of interference	acc. to EN 61000-6-3

Technical Data	
Digital inputs:	
Number of inputs	4 (Type 3)
Input current	max. 2.9 mA at 30 V DC
Signal voltage (0)	0 V ... 5 V DC
Signal voltage (1)	7 V ... 30 V DC
Analog inputs:	
Number of inputs	4 (0/4 mA ... 20 mA)
Internal resistance	approx. 200 Ω / 20 mA
Measuring error (25 °C)	< ± 1 % of the full scale value
Temperature coefficient	< ± 0.1 % / K of the full scale value
Digital outputs:	
No. of outputs	2 contacts
Output current (max.)	0.5 A/ 30 V DC, short-circuit protected
Communication	GSM quad-band
Communication types	SMS (bidirectional),
	telecommunication dial-up connection
	(CSD)
Signaling	3 LEDs for operating status indication
Operating voltage	+10 V ... +30 V DC
Closed current	approx. 35 mA at +24V operating voltage
Current during transmission	< 500 mA at +24V operating voltage

TO-PASS® Mobile, 4 AI, Web, MODBUS

Telecontrol module for fault detection/indication, position monitoring and remote control

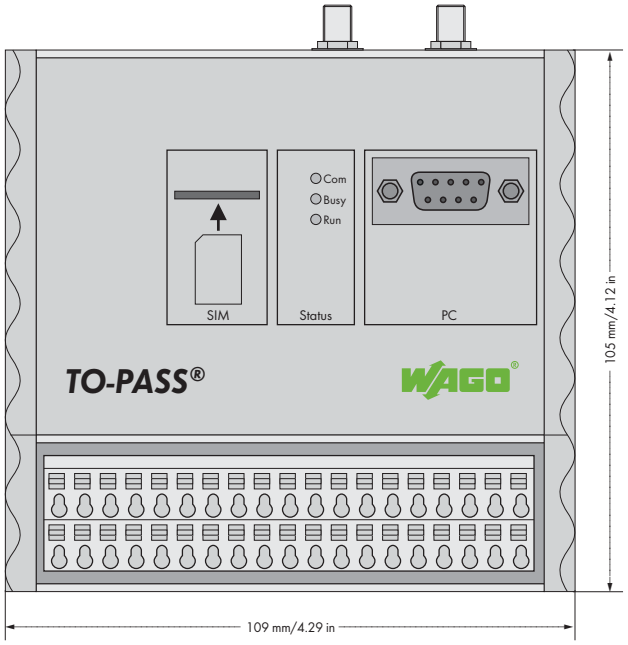

Universal telecontrol module for fault detection/indication, position monitoring and Internet connectivity of machines/products over a GSM network.
The module can be used in many countries via an integrated quad-band GSM modem. Messages are sent via SMS, e-mail, fax or phone call. The data memory stores up to 4096 process images in an adjustable cycle time.
In addition, the process image and GPS position data can be transmitted in an adjustable cycle to a user-selected Internet address. A MODBUS slave (e.g., 750-816) can be connected via RS-232 interface to link additional process values. Switching of outputs is performed via SMS.
The module is equipped with 4 digital inputs, 4 analog inputs, 2 digital outputs and GPS position data, including an integrated GSM modem. Ideal for applications in distributed stations for temperatures ranging from -20 °C to +70 °C.

Ability to mount on DIN-rail and intuitive user software make unit easy to handle. Operating voltage +10V ... +30V DC.

Special functions:

- Acknowledgment: Acknowledging any fault message
- Stand-by: Automatic remote switching of the stand-by service
- Remote parameterization: Programming and process visualization conveniently performed from the office
- GPRS-dedicated line: Permanent online connection to the process on a WEB server or PC with fixed IP address (e.g., DSL connection)
- Event logger: Saves all occurring status changes
- Data logger: Saves all process values with adjustable cycle

Description	Item No.	Pack. Unit
***TO-PASS*® Mobile, 4 AI, Web, MODBUS**	**761-316**	1

Accessories	Item No.
Antennas, USB adapter and power supply units	see pages 576 ... 577
***TO-PASS*® Configuration Software**	see Section 1
***TO-PASS*® Web Portal**	see Section 1

Approvals	
Approvals	for all EU countries
	Approvals for other countries on request

Technical Data	
Operating temperature	-20 °C ... +70 °C
Type of mounting	DIN 35 rail
Antenna connection	SMA socket (for both GSM and GPS)
Wire connection	Terminal strips (WAGO 250 Series) with push-wire connection
Cross sections	0.5 mm² ... 1.5 mm² / AWG 22 ... 14
Strip lengths	9 mm /0.35 in
Dimensions (mm) W x H x L	109 x 78 x 105
Weight	412 g
Storage temperature	-40 °C ... +85 °C
Degree of protection	IP20
EMC immunity of interference	acc. to EN 61000-6-2
EMC emission of interference	acc. to EN 61000-6-3

Technical Data	
Digital inputs:	
Number of inputs	4 (Type 3)
Input current	max. 2.9 mA at 30 V DC
Signal voltage (0)	0 V ... 5 V DC
Signal voltage (1)	7 V ... 30 V DC
Analog inputs:	
Number of inputs	4 (0/4 mA ... 20 mA)
Internal resistance	approx. 200 Ω / 20 mA
Measuring error (25 °C)	< ± 1 % of the full scale value
Temperature coefficient	< ± 0.1 % / K of the full scale value
Digital outputs:	
No. of outputs	2 contacts
Output current (max.)	0.5 A/ 30 V DC, short-circuit protected
Communication	GSM quad-band
Communication types	SMS (bidirectional), telecommunication dial-up connection (CSD)
	GPRS connection to Internet
Signaling	3 LEDs for operating status indication
Operating voltage	+10 V ... +30 V DC
Closed current	approx. 35 mA at +24V operating voltage
Current during transmission	< 500 mA at +24V operating voltage

TO-PASS® Outdoor

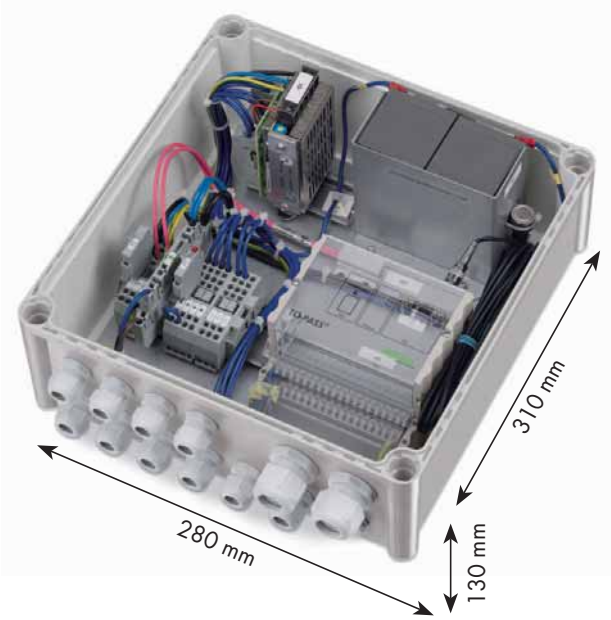

TO-PASS® Outdoor is a compact, IP66 enclosure for the installation of TO-PASS® telecontrol modules. The unit is equipped with an integrated GSM antenna, 230 VAC to 24 VDC power supply; power failure protection is provided by two batteries, and terminal block connections are included for the supply of additional sensors.
The TO-PASS® telecontrol module is not included in delivery and must be ordered separately.

Description	Item No.	Pack. Unit
Outdoor enclosure	**761-9009**	1
Included	IP66 housing with integrated GSM	
	antenna;	
	power supply unit	
	230 VAC to 30 VDC;	
	2 batteries;	
	terminal block connections;	
	cables;	
	heating	

Accessories	Item No.	Pack. Unit
***TO-PASS*® Compact telecontrol modules**	see pages 564 ... 572	

Technical Data	
Supply voltage	230 VAC;
	Supply of external field sensors:
	30 VDC / max. 150 mA
External fuse	B-16A; C-10A
Degree of protection	IP66
Enclosure	Polycarbonate
Rated power	approx. 42 W (heating included)
Self consumption	approx. 1.5 W at 230 VAC (for charged
	batteries and a *TO-PASS*® module without
	sensors and heating)
Battery capacity	24 V / 1.2 Ah / annual maintenance
	required;
	Battery runtimes: approx. 24 hours at
	5 minute transmission cycle without
	considering the supply of decentralized
	peripheral devices
Heater	8 W
Heater switch	at 5 °C ON, at 15 °C OFF
Frequency range	Antenna: GSM (900 MHz)
Dimensions (mm) W x H x L	280x130x310*
	*incl. cable grips
Ambient operating temperature	-4 °C ... +32 °C
Weight	4,8 kg
Cable grip	10 x M16, 2 x M25
Assembly	4 x drilled holes of 7 mm diameter
Type of mounting	Protected wall mount
	(no direct sunlight)
EMC immunity of interference	acc. to EN 61000-6-2
EMC emission of interference	acc. to EN 61000-6-4

Antenna Accessories

Self-adhesive antenna

Theft-proof antenna

Rod antenna

Magnetic foot antenna

Theft-proof combination antenna

Description			Item No.	Pack. Unit
Self-adhesive antenna with 2.5m cable and SMA straight plug	GSM/UMTS/*Bluetooth*®/WLAN 850/900/1800/1900/2100/2400 MHz	Dimension: 117 mm x 12 mm Cable length: 2.5 m Cable type: RG174 Gain: 2.15 dBi VSWR: <1.5 Connector: SMA straight plug	**758-961**	1
Theft-proof antenna with 1m cable and SMA straight plug	GSM/UMTS 850/ 900/ 1800/ 1900/ 2100 MHz	Dimension: 29 mm x 49 mm Cable length: 1 m Cable type: RG174 Max. gain: 2.2 dBi VSWR: <2.0 Connector: SMA straight plug	**758-962**	1
Rod antenna with 1m cable and SMA straight plug	GSM/UMTS 850/900/1800/1900/2100 MHz	Height: 298 mm Cable length: 1 m Cable type: RG58 Gain: 2.2 dBi VSWR: <1.6 Connector: SMA straight plug	**758-963**	1
Magnetic foot antenna with 2.5m cable and SMA straight plug	GSM/ UMTS 850/900/1800/1900/2100 MHz	Height: 88 mm Cable length: 2.5 m Cable type: RG174 Gain: 2.2 dBi VSWR: <2.0 Connector: SMA straight plug	**758-965**	1
Theft-proof combination antenna with 2.5m cable and SMA straight plugs	GSM/ UMTS 850/ 900/ 1800/ 1900/ 2100 MHz additional GPS antenna connection	Dimension: 29 mm x 52 mm Cable length: 2.5 m Cable type: RG174 Max. gain: 2.0 dBi VSWR: <2.0 Connector: SMA straight plug	**758-966**	1

Adaptor 758-964

Adaptor 758-967

Adaptor 758-968

Cable, SMA socket/SMA plug

Antenna splitter

RF lighting protector

Description		Item No.	Pack. Unit
Adaptor, FME plug to SMA plug	GSM/UMTS/*Bluetooth*®/WLAN	**758-964**	1
Adaptor, FME socket to SMA socket	GSM/UMTS/*Bluetooth*®/WLAN	**758-967**	50
Adaptor, SMA plug to SMA plug	GSM/UMTS/*Bluetooth*®/WLAN	**758-968**	1
Cable with SMA socket and SMA plug, 1 m long, H155 type	GSM/UMTS/*Bluetooth*®/WLAN	**758-970/000-100**	1
Cable with SMA socket and SMA plug, 3 m long, H155 type	GSM/UMTS/*Bluetooth*®/WLAN	**758-970/000-300**	1
Cable with SMA socket and SMA plug, 5 m long, H155 type	GSM/UMTS/*Bluetooth*®/WLAN	**758-970/000-500**	1
Cable with SMA socket and SMA plug, 10 m long, H155 type	GSM/UMTS/*Bluetooth*®/WLAN	**758-970/000-1000**	1
Antenna splitter with 3 SMA sockets	GSM/UMTS/*Bluetooth*®/WLAN	**758-971**	1
RF lighting protector, SMA socket to SMA socket	GSM/UMTS/*Bluetooth*®/WLAN	**758-969**	1

TO-PASS Accessories

USB adapter

Serial cable, crossed

Description		Item No.	Pack. Unit
USB adapter with 1 m connection cable		**761-9005**	1
Serial cable, crossed	D-sub 9-pin plug on both ends, 30 cm cable length	**761-9011**	1

Battery

Description		Item No.	Pack. Unit
Battery	12 VDC 1.2 Ah lead-acid	**761-9008**	1
Angled mounting carrier for 761-9008 Battery		**761-9010**	1

Sensor/Actuator Boxes

◀ Section 6

I/O-System — *SPEEDWAY*

- Uncompromising protection, even in the harshest environments outside the control cabinet
- Degree of protection: IP67
- Fully encapsulated

Sensor/Actuator Boxes

- Passive M8/M12 sensor/actuator boxes
- Machine-level signal connection in harsh environment

Sensor/Actuator Boxes

Contents

				Page
	General Product Information			580
	Item Number Keys			581
	Standards and Rated Conditions			582
	Interfaces and Configurations			583
		Description	**Item No.**	
	M12 Sensor/Actuator Box, with Connection Cable	4-way, 4 pin, 5 m connecting cable	757-244/000-005	584
		4-way, 4 pin, 10 m connecting cable	757-244/000-010	
		6-way, 4 pin, 5 m connecting cable	757-264/000-005	
		6-way, 4 pin, 10 m connecting cable	757-264/000-010	
		8-way, 4 pin, 5 m connecting cable	757-284/000-005	
		8-way, 4 pin, 10 m connecting cable	757-284/000-010	
		8-way, 4 pin, 25 m connecting cable	757-284/000-025	
		4-way, 5 pin, 5 m connecting cable	757-245/000-005	586
		4-way, 5 pin, 10 m connecting cable	757-245/000-010	
		6-way, 5 pin, 5 m connecting cable	757-265/000-005	
		6-way, 5 pin, 10 m connecting cable	757-265/000-010	
		8-way, 5 pin, 5 m connecting cable	757-285/000-005	
		8-way, 5 pin, 10 m connecting cable	757-285/000-010	
		8-way, 5 pin, 25 m connecting cable	757-285/000-025	
	M12 Sensor/Actuator Box, with M23 Connector	4-way, 4-pole, M23 connector	757-144	588
		6-way, 4-pole, M23 connector	757-164	
		8-way, 4-pole, M23 connector	757-184	
		4-way, 5-pole, M23 connector	757-145	590
		6-way, 5-pole, M23 connector	757-165	
		8-way, 5-pole, M23 connector	757-185	
		8-way, 5-pole, without LED, M23 connector	757-185/100-000	
	M8 Sensor/Actuator Box, with Connection Cable	4-way, 3 pin, 2 m connecting cable	757-443/000-002	592
		4-way, 3 pin, 5 m connecting cable	757-443/000-005	
		4-way, 3 pin, 10 m connecting cable	757-443/000-010	
		6-way, 3 pin, 5 m connecting cable	757-463/000-005	
		6-way, 3 pin, 10 m connecting cable	757-463/000-010	
		8-way, 3 pin, 5 m connecting cable	757-483/000-005	
		8-way, 3 pin, 10 m connecting cable	757-483/000-010	
		10-way, 3 pin, 5 m connecting cable	757-403/000-005	
		10-way, 3 pin, 10 m connecting cable	757-403/000-010	
	M8 Sensor/Actuator Box, with M16 Connector	4-way, 3-pole, M16 connector	757-343	594
		6-way, 3-pole, M16 connector	757-363	
		8-way, 3-pole, M16 connector	757-383	
		10-way, 3-pole, M16 connector	757-303	
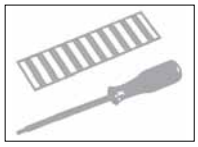	**Accessories**			
	Labeling cards, adapter, connecting cable			596

Sensor/Actuator Boxes
General Product Information

For Signal Acquisition at the Machine Level
Passive M8/M12 sensor/actuator boxes are placed close to the process and acquire signals at the machine level. They can be used in very harsh environmental conditions and establish the connection from sensors and actuators to the controller across molded or detachable cables. Use of standardized pluggable connectors supports sensor and actuator plug & play, and the individual wiring of I/O signals to automation components in the control cabinet is simplified via trunk cable. Cabling is well-arranged and minimized.

Signal Acquisition in Exceptionally Harsh Conditions
The sensor/actuator boxes are very robust and comply with degree of protection IP67 or IP68 with molded cabling (72 hours at 1 m water depth). Therefore, they are the ideal solution for applications where signals must be recorded under extreme environmental conditions (temperature, shock, vibration) without a control cabinet. They're also excellent alternatives when the use of an active IP67 I/O system would not be cost-effective due to a low signal count or simple signal conditions (digital signal acquisition/output).

Plug & play Connection Technology
The sensor/actuator boxes with a removable connecting cable (M16 or M23 pluggable connector) are well-suited to areas where frequent easy release and reconnection is required (transport, modification, service, etc.).

Fixed Trunk Cable
The sensor/actuator boxes with molded cables are preferred when challenging cable paths do not allow the use of preassembled M16/M23 cables.

Extreme Mechanical Performance
A system/machine is exposed to severe mechanical and thermal influences. It is important to process its signals despite strong vibration and shock. The sensor/actuator boxes are used at the machine level. Full encapsulation safeguards system operation, mitigating the effects of extreme vibration and temperature loads when collecting signals and supplying power via the connecting cable of the controller or other automation components in the uncritically positioned area of the control cabinet.

Flexible Assembly
The sensor/actuator boxes can be directly mounted on the machine. Extensive engineering ensures compliance with standardized specifications from CNOMO guidelines regarding the spacing of assembly drill holes that are often used in passive distributor or sensor/actuator boxes. An optional adapter is available that can be used to seamlessly mount two modules side by side. This has the advantage of maintaining a defined distance for proper routing of the sensor/actuator cables and of avoiding contamination points.

- Simple and economical addition to IP20 automation products
  - With increased requirements for environmental conditions
  - For plug & play connection technology when needed
  - For simpler cable installation in the form of trunk cables
- High-quality PUR connecting cables (suitable for drag chains, halogen free)
- Fully encapsulated (resistance and leak-proof)
- Flange sockets (metal design)
- -25 °C to +80 °C operating temperature range
- Incl. status LEDs

Sensor/Actuator Boxes
Item Number Keys

Explanation of the components for the item number key

Series

Item No. : 757-abc/x00-0yy

a: Design
- 1: M12 Sensor/Actuator Box with M23 Connector
- 2: M12 Sensor/Actuator Box with Cable Connection
- 3: M8 Sensor/Actuator Box with M16 Connector
- 4: M8 Sensor/Actuator Box with Cable Connection

b: No of M8/M12 connectors
- 4: 4 ea.
- 6: 6 ea.
- 8: 8 ea.
- 0: 10 ea.

c: Pole No.
- 3: 3-pole
- 4: 4-pole
- 5: 5-pole

x00: Status LEDs
- 100: Without status LEDs

0yy: Length of the connecting cable
- 002: 2m
- 005: 5m
- 010: 10m
- 025: 25m

Standards and Rated Conditions

General Specifications	
Electrical Data	
Contact resistance	10 mΩ
Operating voltage	10 V ... 30 VDC
Current carrying capacity	2 A per signal; 9 A per SA box (M12) or 6 A per SA box (M8)
Switching function	PNP
Mechanical Data	
Protection type	
Sensor/actuator boxes with cable connection	IP68 (72 hours at 1 m water depth)
Sensor/actuator boxes with M16/M23 connector	IP67
Operating temperature	-25 °C ... +80 °C
Mounting	Screw mount
Mounting position	any
Vibration resistance	5g acc. to IEC 60068-2-6
Shock resistance	49g acc. to IEC 60068-2-27
Material Data	
General	Silicon and halogen free
Encapsulation	Fully encapsulated with conformal coating (UL 94 V0)
Housing material	PA 66 (UL 94 V0); RAL 7035
Connecting cable	Suitable for drag chains

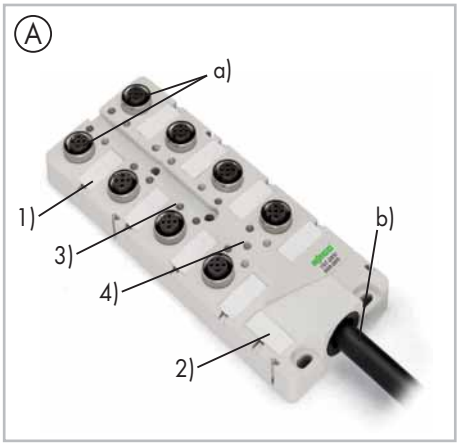

(1) Sensor/actuator marking
(2) Module marking
(3) LED status indicator (by channel), yellow
(4) LED operating indicator module, green

Housing design (A)
M12 Sensor/Actuator Box with Cable Connection
- Sensor/actuator connections M12 (a)
- Connecting cable (b)

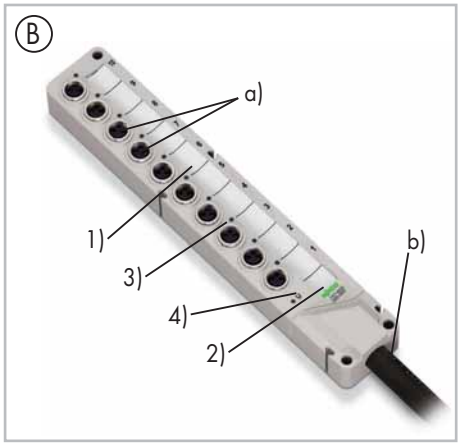

Housing design (B)
M8 Sensor/Actuator Box with Cable Connection
- Sensor/actuator connections M8 (a)
- Connecting cable (b)

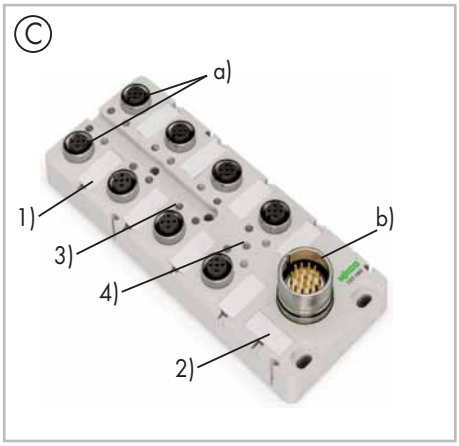

Housing design (C)
M12 Sensor/Actuator Box with M23 Connector
- Sensor/actuator connections M12 (a)
- Supply input M23 (b)

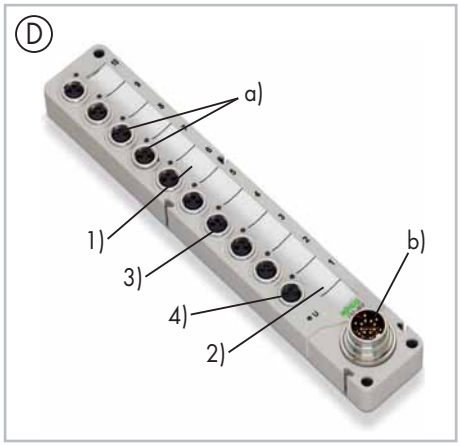

Housing design (D)
M8 Sensor/Actuator Box with M16 Connector
- Sensor/actuator connections M8 (a)
- Supply input M16 (b)

Adapter (E)
- Optional accessory
- For seamless assembly of two side-by-side sensor/actuator boxes
- Defined distance for proper cable connection
- Covers contamination points
- W x H x L (mm):
  10-way: 20 x 16 x 175
  8-way: 20 x 16 x 152
  6-way: 20 x 16 x 123
  4-way: 20 x 16 x 117

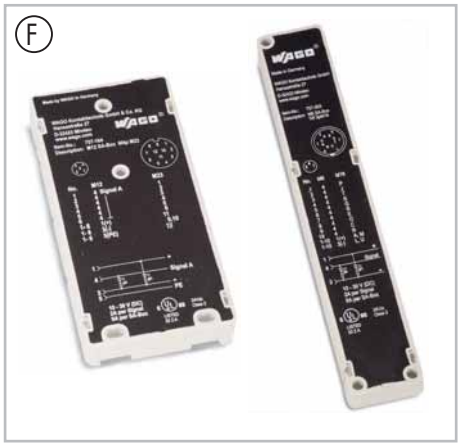

Degree of protection (F)
- All modules are fully encapsulated
- Protection class: IP67/68
- Printing on back of module details pin assignment

Sensor/Actuator Boxes
Interfaces and Configurations

Dimensions and Mounting Dimensions of M12 Sensor/Actuator Boxes

The dimensions also apply to M12 sensor/actuator boxes with cable connection.

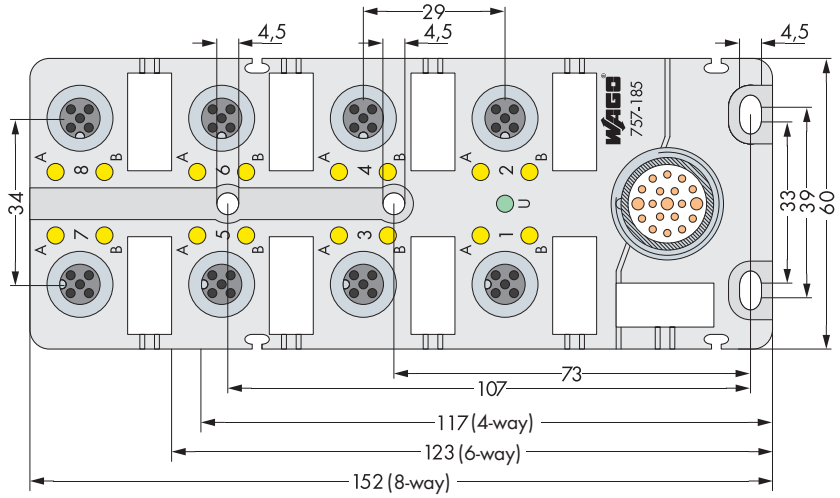

Dimensions in mm

Dimensions and Mounting Dimensions of M8 Sensor/Actuator Boxes

The dimensions also apply to M8 sensor/actuator boxes with cable connection.

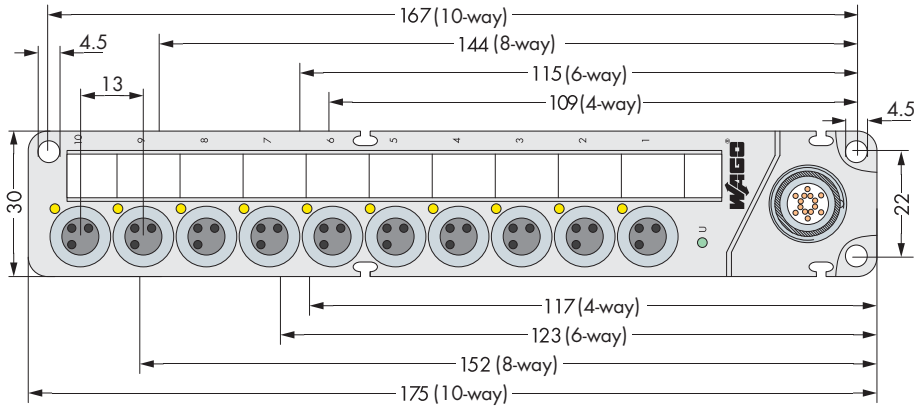

Dimensions in mm

Dimensions: Depth of M12 sensor/actuator boxes or M8 sensor/actuator boxes

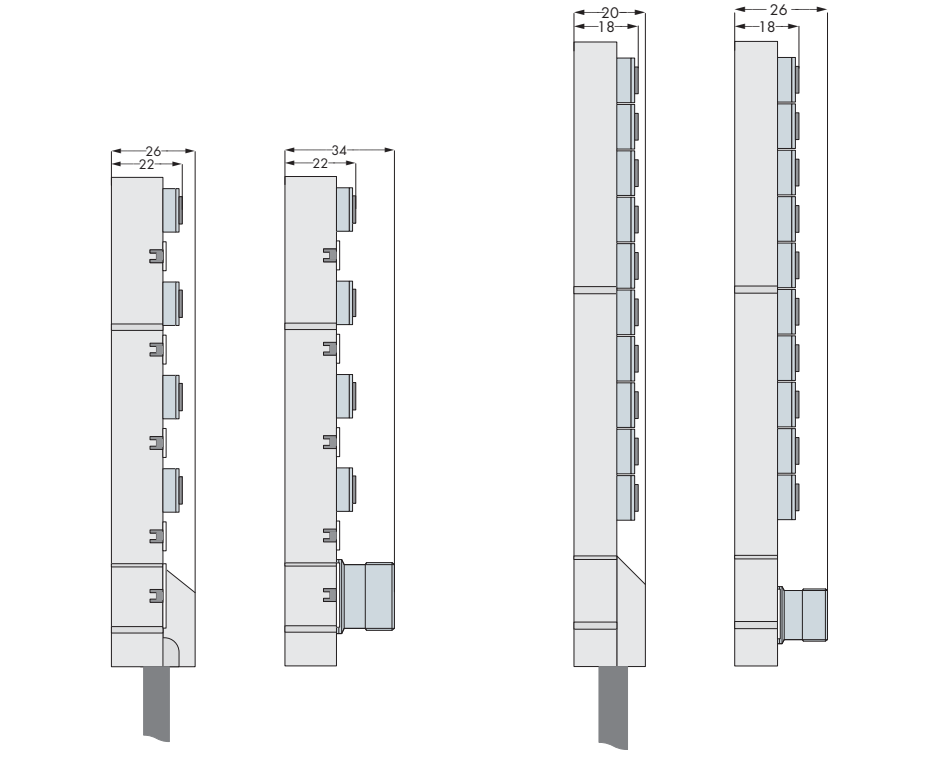

M12 Sensor/Actuator Boxes

4-pole, with cable connection

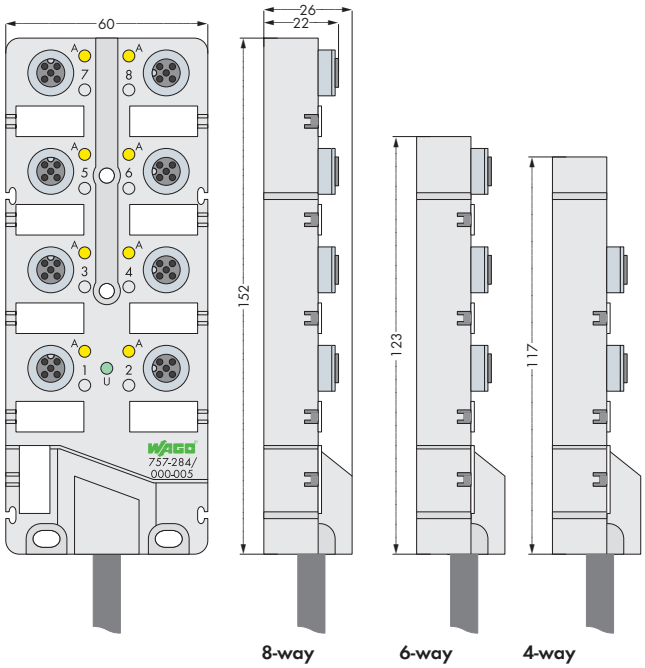

- 4-, 6- and 8-way sensor/actuator boxes
- 4 poles (1 signal per contact)
- Cable length 5 and 10 m
- Green LED operating indicator
- Yellow LED status indicator
- incl. markers (10 pcs)
- incl. M12 protective caps (2 pcs)

Description	Item No.	Pack. Unit
M12 sensor/actuator box		
4-way, 4-pole, 5m connecting cable	**757-244/000-005**	1
4-way, 4-pole, 10m connecting cable	**757-244/000-010**	1
6-way, 4-pole, 5m connecting cable	**757-264/000-005**	1
6-way, 4-pole, 10m connecting cable	**757-264/000-010**	1
8-way, 4-pole, 5m connecting cable	**757-284/000-005**	1
8-way, 4-pole, 10m connecting cable	**757-284/000-010**	1
8-way, 4-pole, 25m connecting cable	**757-284/000-025**	1

Accessories	Item No.
Marker card, marking pen, spacer module and protective cap	see page 596
IP67 cables and connectors	see page 597 + Section 11

Approvals	
UL 508	E 175199, UL 508, Class 2 Equipment Components are designed to be supplied through Class 2 power supplies in accordance with UL 1310 or Class 2 transformers in accordance with UL 1585

Electrical Data	
Contact resistance	≤ 10 mΩ
Operating voltage	10 V ... 30 V DC
Current carrying capacity	2 A per signal; 9 A per SA box
Rated voltage	32 V ~ eff.
Insulation voltage	1 kV / 3 s
Insulation resistance	> 10^9 Ω
Degree of pollution	3 acc. to VDE 0110
Switching function	PNP

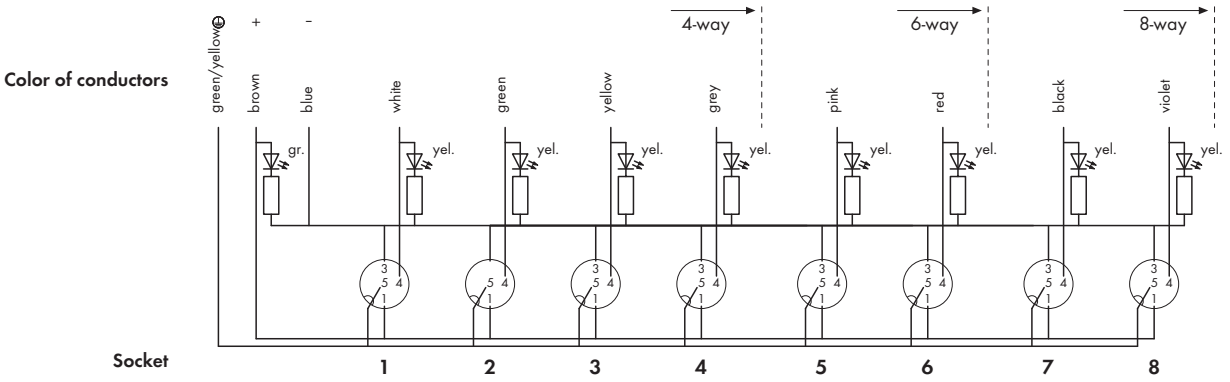

Mechanical Data

Degree of protection	IP68 (1 meter water depth for 72 hours)
	acc. to EN 60529 In fully locked position
	with the appropriate plugs or protective
	caps
Operating temperature	-25 °C ... +80 °C (current load according
	to derating curve)
Fixing	Screw mounting
Dimensions (mm) W x H x L	4-way: 60 x 26 x 117
	6-way: 60 x 26 x 123
	8-way: 60 x 26 x 152
Weight	4-way: 165 g
	6-way: 180 g
	8-way: 215 g
	without cable
Mounting position	any
Vibration resistance	acc. to IEC 60068-2-6
Shock resistance	acc. to IEC 60068-2-27

Material Data

General	Silicon and halogen free
Potting	Fully encapsulated with conformal coating
	(UL 94 V0)
Enclosure	PA 66 (UL 94 V0); RAL 7035
Contacts	
I/O slot	Socket, M12 x 1, 4-pole incl. PE
Contact	CuSn, pre-nickeled and 0.8 µm gold-plated
Tapped bush	Zn diecast nickel-plated
Seal	Viton
Connection cycles	50
Connecting cable	
Cable design	Outer sheath PUR halogen-free
	Black
	Cable end 100 mm stripped
Cable Ø	7.5 mm SA box 4-way
	7.8 mm SA box 6-way
	8.2 mm SA box 8-way
Conductor design	n x 0.34 mm^2 + 3 x 1.00 mm^2
	conductor 0.34 mm^2
	extra-fine stranded 43 x 0.1 mm
	conductor 1.00 mm^2
	extra-fine stranded 55 x 0.15 mm
	color identification of conductors
Suitable for drag chain applications	
bending radius	min. 10 x cable Ø
amb. temperature range	-40 °C ... +90 °C stagnant;
	-5 °C ... +80 °C moving

M12 Sensor/Actuator Boxes

5-pole, with cable connection

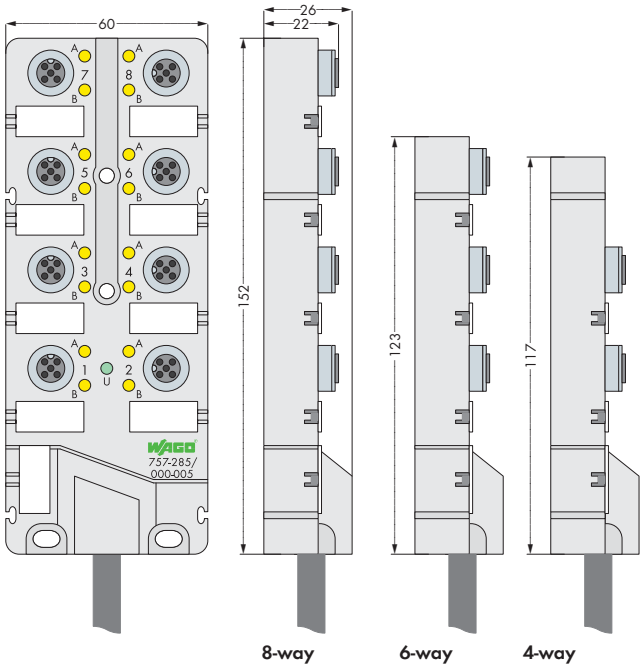

- 4-, 6- and 8-way sensor/actuator boxes
- 5 poles (2 signals per contact)
- Cable length 5 and 10 m
- Green LED operating indicator
- Yellow LED status indicator
- incl. markers (10 pcs)
- incl. M12 protective caps (2 pcs)

Description	Item No.	Pack. Unit
M12 sensor/actuator box		
4-way, 5-pole, 5m connecting cable	**757-245/000-005**	1
4-way, 5-pole, 10m connecting cable	**757-245/000-010**	1
6-way, 5-pole, 5m connecting cable	**757-265/000-005**	1
6-way, 5-pole, 10m connecting cable	**757-265/000-010**	1
8-way, 5-pole, 5m connecting cable	**757-285/000-005**	1
8-way, 5-pole, 10m connecting cable	**757-285/000-010**	1
8-way, 5-pole, 25m connecting cable	**757-285/000-025**	1

Accessories	Item No.
Marker card, marking pen, spacer module and protective cap	see page 596
IP67 cables and connectors	see page 597 + Section 11

Approvals	
UL 508	E 175199, UL 508, Class 2 Equipment Components are designed to be supplied through Class 2 power supplies in accordance with UL 1310 or Class 2 transformers in accordance with UL 1585

Electrical Data	
Contact resistance	≤ 10 mΩ
Operating voltage	10 V ... 30 V DC
Current carrying capacity	2 A per signal; 9 A per SA box
Rated voltage	32 V ~ eff.
Insulation voltage	1 kV / 3 s
Insulation resistance	> 10^9 Ω
Degree of pollution	3 acc. to VDE 0110
Switching function	PNP

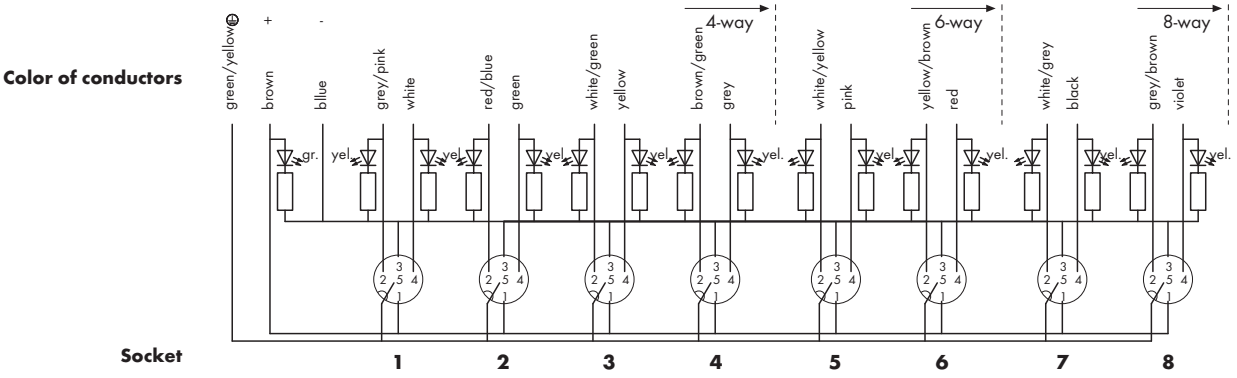

Mechanical Data

Degree of protection	IP68 (1 meter water depth for 72 hours)
	acc. to EN 60529 In fully locked position
	with the appropriate plugs or protective
	caps
Operating temperature	-25 °C ... +80 °C (current load according
	to derating curve)
Fixing	Screw mounting
Dimensions (mm) W x H x L	4-way: 60 x 26 x 117
	6-way: 60 x 26 x 123
	8-way: 60 x 26 x 152
Weight	4-way: 165 g
	6-way: 185 g
	8-way: 225 g
	without cable
Mounting position	any
Vibration resistance	acc. to IEC 60068-2-6
Shock resistance	acc. to IEC 60068-2-27

Material Data

General	Silicon and halogen free
Potting	Fully encapsulated with conformal coating
	(UL 94 V0)
Enclosure	PA 66 (UL 94 V0); RAL 7035
Contacts	
I/O slot	Socket, M12 x 1, 5-pole incl. PE
Contact	CuSn, pre-nickeled and 0.8 µm gold-plated
Tapped bush	Zn diecast nickel-plated
Seal	Viton
Connection cycles	50
Connecting cable	
Cable design	Outer sheath PUR halogen-free
	Black
	Cable end 100 mm stripped
Cable Ø	8.2 mm SA box 4-way
	8.8 mm SA box 6-way
	9.7 mm SA box 8-way
Conductor design	n x 0.34 mm^2 + 3 x 1.00 mm^2
	conductor 0.34 mm^2
	extra-fine stranded 43 x 0.1 mm
	conductor 1.00 mm^2
	extra-fine stranded 55 x 0.15 mm
	color identification of conductors
Suitable for drag chain applications	
bending radius	min. 10 x cable Ø
amb. temperature range	-40°C ... +90°C stagnant;
	-5°C ... +80°C moving

M12 Sensor/Actuator Boxes

4-pole, with M23 connection

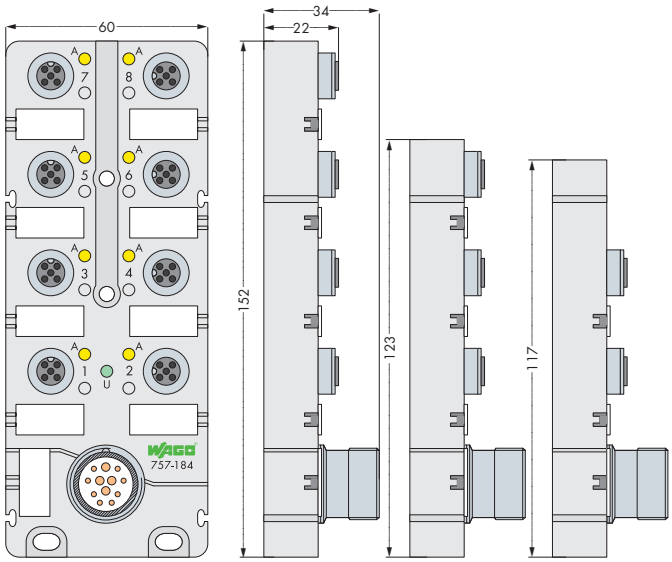

8-way 6-way 4-way

- 4-, 6- and 8-way sensor/actuator boxes
- 4 poles (1 signal per contact)
- M23 connector (12 poles)
- Green LED operating indicator
- Yellow LED status indicator
- incl. markers (10 pcs)
- incl. M12 protective caps (2 pcs)

Description	Item No.	Pack. Unit
M12 sensor/actuator box		
4-way, 4-pole, M23 connector	**757-144**	1
6-way, 4-pole, M23 connector	**757-164**	1
8-way, 4-pole, M23 connector	**757-184**	1

Accessories	Item No.
Marker card, marking pen, spacer module and protective cap	see page 596
IP67 cables and connectors	see page 597 + Section 11

Approvals	
UL 508	E 175199, UL 508, Class 2 Equipment Components are designed to be supplied through Class 2 power supplies in accordance with UL 1310 or Class 2 transformers in accordance with UL 1585

Electrical Data	
Contact resistance	≤ 10 mΩ
Operating voltage	10 V ... 30 V DC
Current carrying capacity	2 A per signal; 9 A per SA box
Rated voltage	32 V ~ eff.
Insulation voltage	1 kV / 3 s
Insulation resistance	> 10^9 Ω
Degree of pollution	3 acc. to VDE 0110
Switching function	PNP

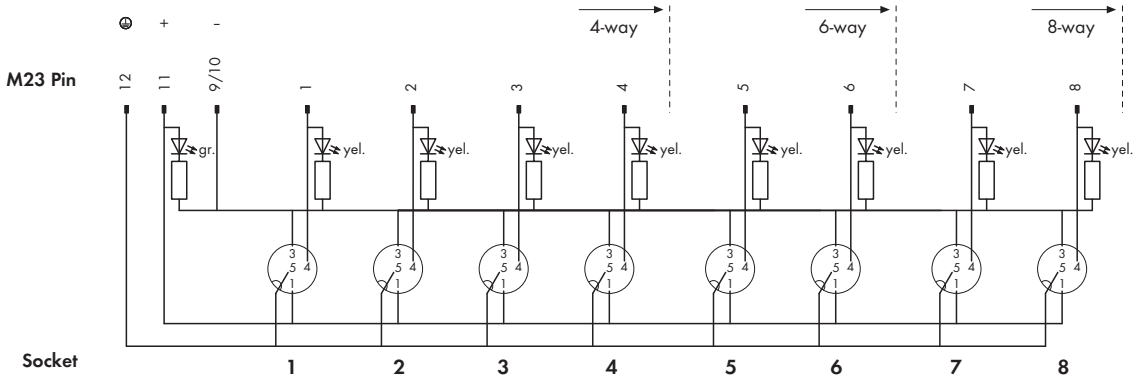

Mechanical Data

Degree of protection	IP67 acc. to EN 60529 (NEMA 6 & 6P)
	In fully locked position with the appropriate plugs or protective caps
Operating temperature	-25 °C ... +80 °C (current load according to derating curve)
Fixing	Screw mounting
Dimensions (mm) W x H x L	4-way: 60 x 34 x 117
	6-way: 60 x 34 x 123
	8-way: 60 x 34 x 152
Weight	4-way: 180 g
	6-way: 195 g
	8-way: 235 g
Mounting position	any
Vibration resistance	acc. to IEC 60068-2-6
Shock resistance	acc. to IEC 60068-2-27

Material Data

General	Silicon and halogen free
Potting	Fully encapsulated with conformal coating (UL 94 V0)
Enclosure	PA 66 (UL 94 V0); RAL 7035
Contacts	
I/O slot	Socket, M12 x 1, 4-pole incl. PE
Contact	CuSn, pre-nickeled and 0.8 µm gold-plated
Tapped bush	Zn diecast nickel-plated
Seal	Viton
Connection cycles	50

M12 Sensor/Actuator Boxes

5-pole, with M23 connection

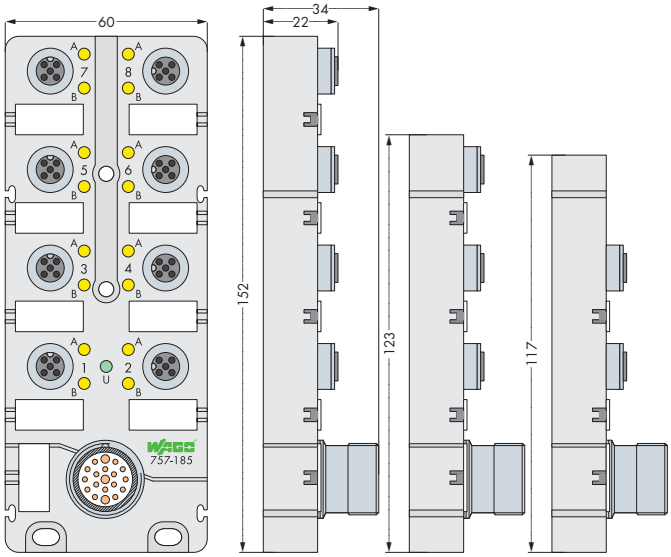

8-way 6-way 4-way

- 4-, 6- and 8-way sensor/actuator boxes
- 5 poles (2 signals per contact)
- M23 connector (19 poles)
- Green LED operating indicator
- Yellow LED status indicator
  (does not apply for modules marked as "without LED")
- incl. markers (10 pcs)
- incl. M12 protective caps (2 pcs)

Note: Modules without status LED can also be used to transmit analog signals

Description	Item No.	Pack. Unit
M12 sensor/actuator box		
4-way, 5-pole, M23 connector	**757-145**	1
6-way, 5-pole, M23 connector	**757-165**	1
8-way, 5-pole, M23 connector	**757-185**	1
8-way, 5-pole, without LED, M23 connector	**757-185/100-000**	1

Accessories	Item No.
Marker card, marking pen, spacer module and protective cap	see page 596
IP67 cables and connectors	see page 597 + Section 11

Approvals	
UL 508	E 175199, UL 508, Class 2 Equipment Components are designed to be supplied through Class 2 power supplies in accordance with UL 1310 or Class 2 transformers in accordance with UL 1585

Electrical Data	
Contact resistance	≤ 10 mΩ
Operating voltage	10 V ... 30 V DC
Current carrying capacity	2 A per signal; 9 A per SA box
Rated voltage	32 V ~ eff.
Insulation voltage	1 kV / 3 s
Insulation resistance	> 10^9 Ω
Degree of pollution	3 acc. to VDE 0110
Switching function	PNP

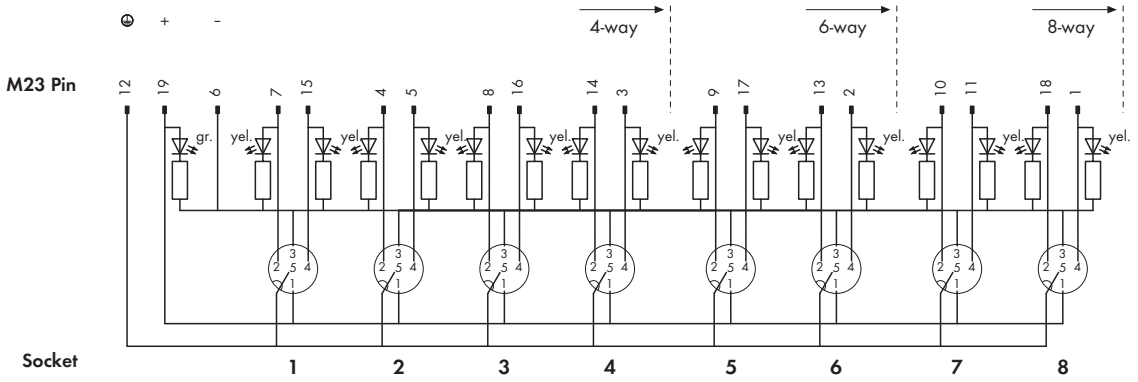

Mechanical Data

Degree of protection	IP67 acc. to EN 60529 (NEMA 6 & 6P)
	In fully locked position with the appropriate plugs or protective caps
Operating temperature	-25 °C ... +80 °C (current load according to derating curve)
Fixing	Screw mounting
Dimensions (mm) W x H x L	4-way: 60 x 34 x 117
	6-way: 60 x 34 x 123
	8-way: 60 x 34 x 152
Weight	4-way: 180 g
	6-way: 200 g
	8-way: 245 g
Mounting position	any
Vibration resistance	acc. to IEC 60068-2-6
Shock resistance	acc. to IEC 60068-2-27

Material Data

General	Silicon and halogen free
Potting	Fully encapsulated with conformal coating (UL 94 V0)
Enclosure	PA 66 (UL 94 V0); RAL 7035
Contacts	
I/O slot	Socket, M12 x 1, 5-pole incl. PE
Contact	CuSn, pre-nickeled and 0.8 µm gold-plated
Tapped bush	Zn diecast nickel-plated
Seal	Viton
Connection cycles	50

M8 Sensor/Actuator Boxes

3-pole, with cable connection

M8 sensor / actuator box with marker strips

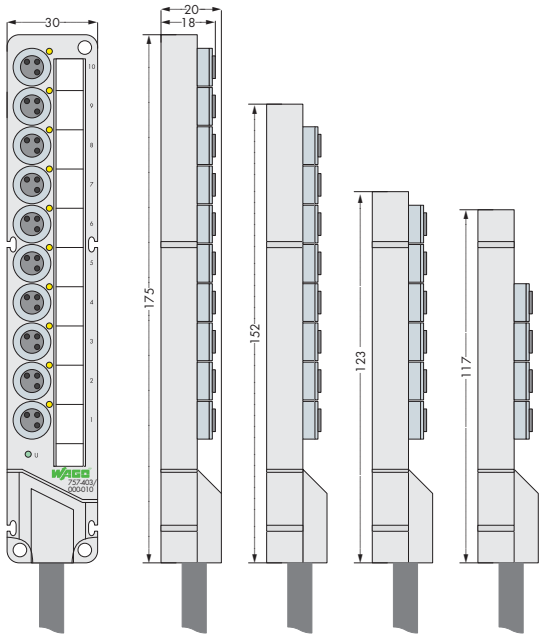

- M8 sensor/actuator boxes, 4-, 6-, 8- and 10-way
- 3-pole (1 signal per contact)
- Cable length 5 m or 10 m (cable end 100 mm stripped), 4-way sensor/actuator box with 2 m connecting cable (cable end 200 mm stripped)
- Green LED operating indicator
- Yellow LED status indicator
- incl. marker strips (note: WMB markers can also be used)
- incl. M8 protective caps (2 pcs)

Description	Item No.	Pack. Unit
M8 sensor/actuator box		
4-way, 3-pole, 2m connecting cable	**757-443/000-002**	1
4-way, 3-pole, 5m connecting cable	**757-443/000-005**	1
4-way, 3-pole, 10m connecting cable	**757-443/000-010**	1
6-way, 3-pole, 5m connecting cable	**757-463/000-005**	1
6-way, 3-pole, 10m connecting cable	**757-463/000-010**	1
8-way, 3-pole, 5m connecting cable	**757-483/000-005**	1
8-way, 3-pole, 10m connecting cable	**757-483/000-010**	1
10-way, 3-pole, 5m connecting cable	**757-403/000-005**	1
10-way, 3-pole, 10m connecting cable	**757-403/000-010**	1

Accessories	Item No.
Marker strips, marking pen, spacer module and protective cap	see page 596
IP67 cables and connectors	see page 597 + Section 11

Approvals	
UL 508	E 175199, UL 508, Class 2 Equipment Components are designed to be supplied through Class 2 power supplies in accordance with UL 1310 or Class 2 transformers in accordance with UL 1585

Electrical Data	
Contact resistance	≤ 10 mΩ
Operating voltage	10 V ... 30 V DC
Current carrying capacity	2 A per signal; 6 A per SA box
Rated voltage	32 V ~ eff.
Insulation voltage	1 kV / 3 s
Insulation resistance	> 10^9 Ω
Degree of pollution	3 acc. to VDE 0110
Switching function	PNP

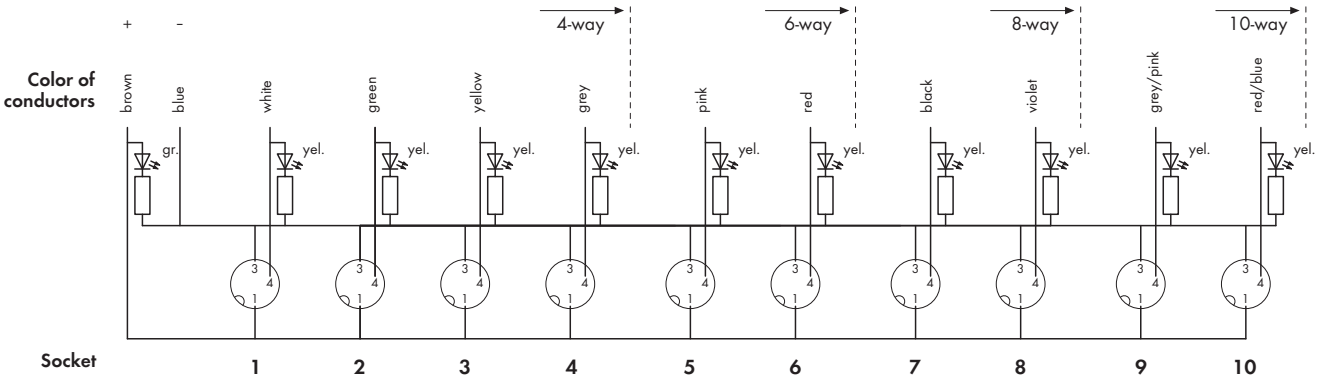

Mechanical Data

Degree of protection	IP68 (1 meter water depth for 72 hours) acc. to EN 60529 In fully locked position with the appropriate plugs or protective caps
Operating temperature	-25 °C ... +80 °C (current load according to derating curve)
Fixing	Screw mounting
Dimensions (mm) W x H x L	4-way: 30 x 20 x 117 6-way: 30 x 20 x 123 8-way: 30 x 20 x 152 10-way: 30 x 20 x 175
Weight	4-way: 85 g 6-way: 95 g 8-way: 110 g 10-way: 130 g without cable
Mounting position	any
Vibration resistance	acc. to IEC 60068-2-6
Shock resistance	acc. to IEC 60068-2-27

Material Data

General	Silicon and halogen free
Potting	Fully encapsulated with conformal coating (UL 94 V0)
Enclosure	PA 66 (UL 94 V0); RAL 7035
Contacts	
I/O slot	Socket, M8 x 1, 3-pole
Contact	CuSn, pre-nickeled and 0.8 µm gold-plated
Tapped bush	Zn diecast nickel-plated
Seal	Viton
Connection cycles	50
Connecting cable	
Cable design	Outer sheath PUR halogen-free Black Cable end 100 mm stripped 757-443/000-002: Cable end 200 mm stripped
Cable Ø	6.4 mm SA box 4-way 7.2 mm SA box 6-way 7.4 mm SA box 8-way 7.6 mm SA box 10-way
Conductor design	n x 0.34 mm² + 2 x 0.75 mm² conductor 0.34 mm² extra-fine stranded 43 x 0.1 mm conductor 0.75 mm² extra-fine stranded 21 x 0.205 mm color identification of conductors
Suitable for drag chain applications	
bending radius	min. 10 x cable Ø
amb. temperature range	-40 °C ... +90 °C stagnant; -5 °C ... +80 °C moving

M8 Sensor/Actuator Boxes

3-pole, with M16 connection

M8 sensor / actuator box with marker strips

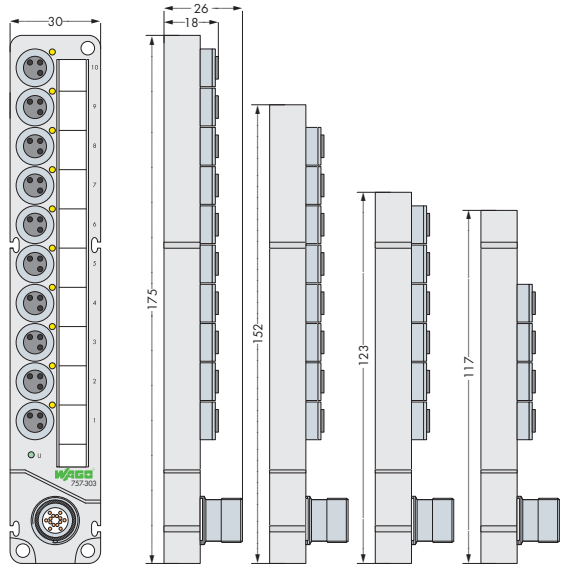

10-way 8-way 6-way 4-way

- M8 sensor/actuator boxes, 4-, 6-, 8- and 10-way
- 3-pole (1 signal per contact)
- M16 connector (14-pole)
- Green LED operating indicator
- Yellow LED status indicator
- incl. marker strips (note: WMB markers can also be used)
- incl. M8 protective caps (2 pcs)

Description	Item No.	Pack. Unit
M8 sensor/actuator box		
4-way, 3-pole, M16 connector	**757-343**	1
6-way, 3-pole, M16 connector	**757-363**	1
8-way, 3-pole, M16 connector	**757-383**	1
10-way, 3-pole, M16 connector	**757-303**	1

Accessories	Item No.
Marker strips, marking pen, spacer module and protective cap	see page 596
IP67 cables and connectors	see page 597 + Section 11

Approvals

UL 508	E 175199, UL 508, Class 2 Equipment Components are designed to be supplied through Class 2 power supplies in accordance with UL 1310 or Class 2 transformers in accordance with UL 1585

Electrical Data

Contact resistance	≤ 10 mΩ
Operating voltage	10 V ... 30 V DC
Current carrying capacity	2 A per signal; 6 A per SA box
Rated voltage	32 V ~ eff.
Insulation voltage	1 kV / 3 s
Insulation resistance	> 10^9 Ω
Degree of pollution	3 acc. to VDE 0110
Switching function	PNP

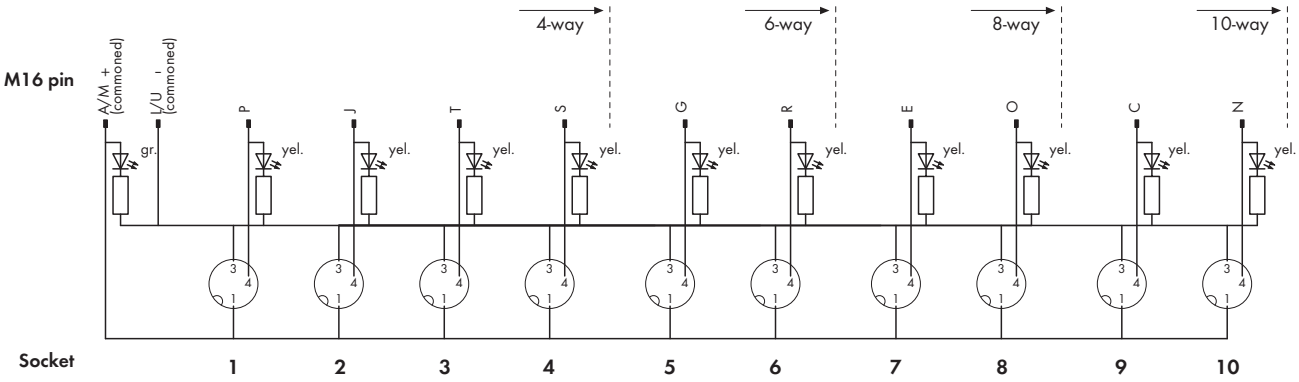

Mechanical Data

Degree of protection	IP67 acc. to EN 60529 (NEMA 6 & 6P)
	In fully locked position with the appropriate plugs or protective caps
Operating temperature	-25 °C ... +80 °C (current load according to derating curve)
Fixing	Screw mounting
Dimensions (mm) W x H x L	4-way: 30 x 26 x 117
	6-way: 30 x 26 x 123
	8-way: 30 x 26 x 152
	10-way: 30 x 26 x 175
Weight	4-way: 100 g
	6-way: 110 g
	8-way: 120 g
	10-way: 145 g
Mounting position	any
Vibration resistance	acc. to IEC 60068-2-6
Shock resistance	acc. to IEC 60068-2-27

Material Data

General	Silicon and halogen free
Potting	Fully encapsulated with conformal coating (UL 94 V0)
Enclosure	PA 66 (UL 94 V0); RAL 7035
Contacts	
I/O slot	Socket, M8 x 1, 3-pole
Contact	CuSn, pre-nickeled and 0.8 µm gold-plated
Tapped bush	Zn diecast nickel-plated
Seal	Viton
Connection cycles	50

Accessories

Marking cards

Marker strips for Series 757

Marking pen with fiber tip

Description		Item No.	Pack. Unit
Marker card (40 tags)	for M12 sensor/actuator box	**757-011**	1
Marker strips for M8 sensor/actuator box 4-way		**757-041**	100
Marker strips for M8 sensor/actuator box 6-way		**757-061**	100
Marker strips for M8 sensor/actuator box 8-way		**757-081**	100
Marker strips for M8 sensor/actuator box 10-way		**757-001**	100
Marking pen	for permanent marking	**210-110**	1

Spacer module

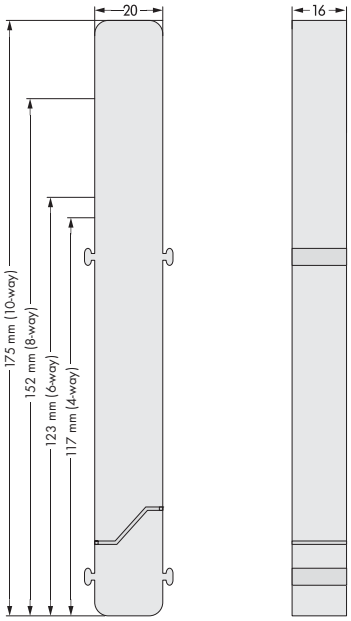

Description		Item No.	Pack. Unit
Spacer module for sensor/actuator box 4-way		**757-040**	10
Spacer module for sensor/actuator box 6-way		**757-060**	10
Spacer module for sensor/actuator box 8-way	(see illustration)	**757-080**	10
Spacer module for sensor/actuator box 10-way		**757-000**	10

IP67 Cables and Connectors, 756 Series

Distribution cables for Sensor/Actuator Boxes

M16 Socket

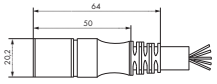

14-pole

Pin A, L: 0.75 mm²
Pin C - J, N - T: 0.34 mm²

A	brown	N	pink-brown
C	white-pink	O	violet
E	black	P	white
G	pink	R	red
J	green	S	gray
L	blue	T	yellow
M	commoned with A	U	commoned with L

M16 Distribution cables for connecting M8 sensor /actuator boxes		Cable Ø	Item No.	Pack. Unit
14-pole,	M16 socket, straight, one free wire end, 5 m	9.1 mm ± 0.2	**756-3205/140-050**	1
	M16 socket, straight, one free wire end, 10 m	9.1 mm ± 0.2	**756-3205/140-100**	1
	M16 socket, straight, one free wire end, 15 m	9.1 mm ± 0.2	**756-3205/140-150**	1

M16 Socket

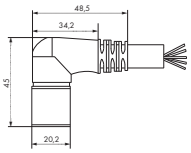

14-pole

Pin A, L: 0.75 mm²
Pin C - J, N - T: 0.34 mm²

A	brown	N	pink-brown
C	white-pink	O	violet
E	black	P	white
G	pink	R	red
J	green	S	gray
L	blue	T	yellow
M	commoned with A	U	commoned with L

M16 Distribution cables for connecting M8 sensor /actuator boxes		Cable Ø	Item No.	Pack. Unit
14-pole,	M16 socket, right angle, one free wire end, 5 m	9.1 mm ± 0.2	**756-3206/140-050**	1
	M16 socket, right angle, one free wire end, 10 m	9.1 mm ± 0.2	**756-3206/140-100**	1
	M16 socket, right angle, one free wire end, 15 m	9.1 mm ± 0.2	**756-3206/140-150**	1

M23 Socket

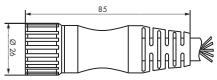

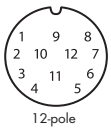

12-pole

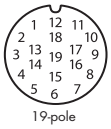

19-pole

Pin 9, 11, 12: 1.00 mm²; Pin 1 - 8: 0.34 mm²

1	white	5	pink	9	blue
2	green	6	red	10	commoned with 9
3	yellow	7	black	11	brown
4	gray	8	violet	12	green-yellow

Pin 6, 12, 19: 1.00 mm²; Pin 1 - 5, 7 - 11, 13 - 19: 0.34 mm²

1	violet	8	white-green	15	white
2	red	9	white-yellow	16	yellow
3	gray	10	white-gray	17	pink
4	red-blue	11	black	18	gray-brown
5	green	12	green-yellow	19	brown
6	blue	13	yellow-brown		
7	gray-pink	14	brown-green		

M23 Distribution cables for connecting M8 sensor /actuator boxes		Cable Ø	Item No.	Pack. Unit
12-pole,	M23 socket, straight, one free wire end, 5 m	8.6 mm ± 0.3	**756-3201/120-050**	1
	M23 socket, straight, one free wire end, 10 m	8.6 mm ± 0.3	**756-3201/120-100**	1
	M23 socket, straight, one free wire end, 15 m	8.6 mm ± 0.3	**756-3201/120-150**	1
19-pole,	M23 socket, straight, one free wire end, 5 m	9.7 mm ± 0.3	**756-3203/190-050**	1
	M23 socket, straight, one free wire end, 10 m	9.7 mm ± 0.3	**756-3203/190-100**	1
	M23 socket, straight, one free wire end, 15 m	9.7 mm ± 0.3	**756-3203/190-150**	1

M23 Socket

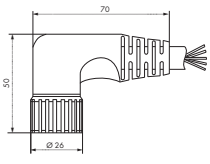

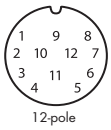

12-pole

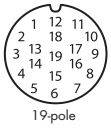

19-pole

Pin 9, 11, 12: 1.00 mm²; Pin 1 - 8: 0.34 mm²

1	white	5	pink	9	blue
2	green	6	red	10	commoned with 9
3	yellow	7	black	11	brown
4	gray	8	violet	12	green-yellow

Pin 6, 12, 19: 1.00 mm²; Pin 1 - 5, 7 - 11, 13 - 19: 0.34 mm²

1	violet	8	white-green	15	white
2	red	9	white-yellow	16	yellow
3	gray	10	white-gray	17	pink
4	red-blue	11	black	18	gray-brown
5	green	12	green-yellow	19	brown
6	blue	13	yellow-brown		
7	gray-pink	14	brown-green		

M23 Distribution cables for connecting M8 sensor /actuator boxes		Cable Ø	Item No.	Pack. Unit
12-pole,	M23 socket, right angle, one free wire end, 5 m	8.6 mm ± 0.3	**756-3202/120-050**	1
	M23 socket, right angle, one free wire end, 10 m	8.6 mm ± 0.3	**756-3202/120-100**	1
	M23 socket, right angle, one free wire end, 15 m	8.6 mm ± 0.3	**756-3202/120-150**	1
19-pole,	M23 socket, right angle, one free wire end, 5 m	9.7 mm ± 0.3	**756-3204/190-050**	1
	M23 socket, right angle, one free wire end, 10 m	9.7 mm ± 0.3	**756-3204/190-100**	1
	M23 socket, right angle, one free wire end, 15 m	9.7 mm ± 0.3	**756-3204/190-150**	1

Custom cable lengths upon request

IP67 Cables and Connectors, 756 Series
Distribution cables for Sensor/Actuator Boxes

Technical Data	M16 connecting cable	M23 connecting cable
General		
Operating voltage		
12-pole	-/-	300 V
14-pole	150 V	-/-
19-pole	-/-	150 V
Operating current		
12-pole	-/-	8 A
14-pole	4 A (0.34mm^2); 6 A (0.75 mm^2)	-/-
19-pole	-/-	10 A (contacts 6, 12, 19); 8 A (other contacts)
Rated surge voltage		
12-pole	-/-	2.5 kV AC
14-pole	1.2 kV	-/-
19-pole	-/-	1.5 kV AC
Insulation resistance	-/-	≥ 10^{12} Ω
Contact resistance	-/-	≤ 3 mΩ
Resistance of conductor		
0.34 mm^2	≤ 53.5 mΩ/km	≤ 54.1 mΩ/km
0.75 mm^2	≤ 26.0 mΩ/km	-/-
1.0 mm^2	-/-	≤ 18.7 mΩ/km
Degree of pollution (VDE 0110)	II/III	III
Degree of protection (IEC 60529)	IP67 (in fully locked position)	
Operating temperature		
moved	-30 °C ... +90 °C	-5 °C ... +80 °C
static	-40 °C ... +90 °C	
Suitable for drag chain applications		
Bending radius	min 10 x Cable ⌀	
Bending cycles	≥ 2 million	
Acceleration	max. 5 m/s^2	
Path feed rate	max. 200 m/min	
Path	max. 5 m horizontal, max. 2 m vertical	
Other characteristics	Oil resistant acc. to DIN/VDE 0472 part 803	Silicone/PVC free, resistant to oil, chemicals, hydrolysis and microbes
Cables		
Designation	LifYwYw11Y	Li9YH-11Y
Comment	designed according to UL style 21198, core style 10493	100 mm stripped wire end
Conductor	fine-stranded bare copper conductors	
12-polig (8 wires 0.34 mm^2; 3 wires 1.0 mm^2)	-/-	43 x 0.1 mm; 128 x 0.1 mm
14-polig (10 wires 0.34 mm^2; 2 wires 0.75 mm^2)	42 x 0.1 mm; 95 x 0.1 mm	-/-
19-polig (16 wires 0.34 mm^2; 3 wires 1.0 mm^2)	-/-	43 x 0.1 mm; 55 x 0.1 mm
Conductor insulation	PVC YI 8 acc. to DIN VDE 0207	PP9Y halogen free
Core wrapping		Fleece
Outer jacket	PUR Polyurethane	Polyurethane (PUR) halogen free, flame retardant acc. to DIN VDE 0472, part 804, color: black (≈ RAL 9005)
Cable ⌀ 12-pole	-/-	⌀ 8.6 mm ± 0.3
Cable ⌀ 14-pole	⌀ 9.1 mm ± 0.2	-/-
Cable ⌀ 19-pole	-/-	⌀ 9.7 mm ± 0.3
Connectors		
Mechanical life	50 mating cycles	
Moulded body	Polyamide (PA)/UL 94 V0	Thermoplastic Polyester (PBT), Polyamide (PA 66)/UL 94 V0
Housing material	CuZn/Ni	Machined part of Copper-Zinc alloy (CuZn), Die cast part of Zinc (GD-Zn), Polyurethane (PUR), plastic injection moulding
Contact material	CuZn	
Contact plating	Gold (Au)	Nickel (Ni) with gold plating (Au) or passivated finish
Sealing and O-ring	CR (Neoprene)	Fluorocarbon rubber (FPM)

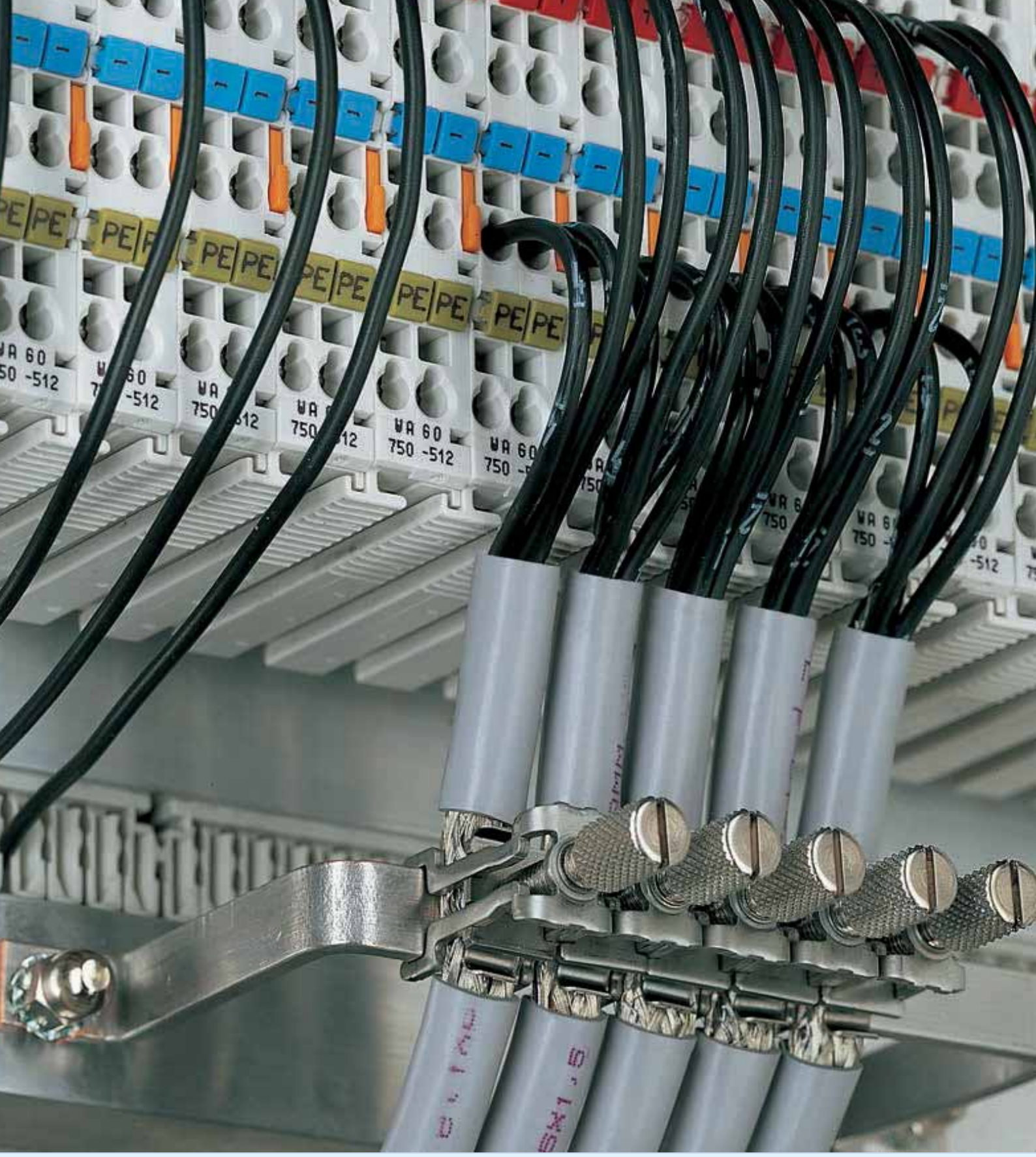

Accessories Tools

			Page
	Power Supplies, 787 Series	Power Supplies Overview	602
		Back-up Capacitor Module	604
		Rail-Mounted Modules - DC/DC Converter	605
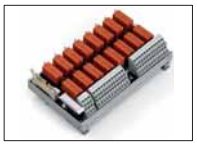	**System Wiring,** 704, 706 and 857 Series	Interface Modules for System Wiring	606
		WAGO Interface Cables	614
		Interface Modules for System Wiring	616
	IP67 Cables and Connectors, 756 Series	Sensor/Actuator Cables	620
		Sensor/Actuator Distribution Components and Accessories	628
		Connectors for Self Assembly	629
		Torque Wrench M8 and M12	631
	Configuration	*Bluetooth*® Adapter	632
		Communication Cables	633
	Fieldbus Connectors, 750 Series	PROFIBUS, ETHERNET, PROFINET, CANopen, INTERBUS, CC-Link	634
	IP65 Enclosures, 850 Series	Stainless Steel, Sheet Steel, Aluminum, Polyester	644
	Accessories for DALI Multi-Master, Sensors (2851 Series) and Power Supply (787 Series)	DALI Multi-Sensors	650
		DALI Multi-Sensor Kit	652
		Power Supply for DALI Multi-Master	653
	Fieldbus Junction Boxes for DeviceNet, 810 Series		654
	Shield (Screen) Connecting System, 790, 791 Series		656
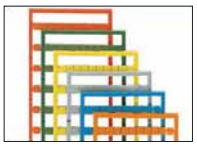	**Smart Data Engineering,** Marking System		660
	Thermal Transfer Printers, Plotter and Accessories		666
	Marking Accessories, Marker Cards and 750/753 Series Marker Carrier		674
	WAGO Wire and Cable Marking (210, 211 Series)		678
	Carrier Rails and Accessories, 210, 249, 209 Series		684
	Tools, Test and Measurement Tools, 206, 210 Series		686

EPSITRON® – Advanced Power Supply System

For additional technical data, see INTERFACE ELECTRONIC Full Line Catalog or visit www.wago.com/epsitron

Item Number	Output	Input Voltage Range	Functional Description
EPSITRON® PRO Power – Professional and Efficient Power Supplies with Extra Power			
787-819	12 VDC (11 ... 18 V) / 6 A	1 x 85 ... 264 VAC 120 ... 373 VDC	• TopBoost provides up to 60 A of additional output for 50 ms • PowerBoost offers up to 200 % of output power for four seconds • DC OK contact and stand-by input • Clear operating status indication via LED • Up to 94 % efficiency • Ambient operating temperature: –25 °C ... +70 °C (device start at –40 °C, type-tested) • Slim design and versatile mounting options • Pluggable CAGE CLAMP® connection technology • UL 508, UL 60950 approvals • Optional LineMonitor provides configuration and monitoring of signal inputs and outputs [a]
787-821	12 VDC (11 ... 18 V) / 10 A		
787-831	12 VDC (11 ... 18 V) / 15 A		
787-818	24 VDC (22 ... 29.5 V) / 3 A		
787-822	24 VDC (22 ... 29.5 V) / 5 A		
787-832	24 VDC (22 ... 29.5 V) / 10 A		
787-834	24 VDC (22 ... 29.5 V) / 20 A		
787-833	48 VDC (33 ... 52 V) / 5 A		
787-835	48 VDC (33 ... 52 V) / 10 A		
787-840	24 VDC (22.8 ... 28.8 V) / 10 A	2/3 x 340 ... 550 VAC 480 ... 780 VDC	
787-842	24 VDC (22.8 ... 28.8 V) / 20 A		
787-844	24 VDC (22.8 ... 28.8 V) / 40 A		
787-850 [a]	24 VDC (22.8 ... 28.8 V) / 10 A		
787-852 [a]	24 VDC (22.8 ... 28.8 V) / 20 A		
787-854 [a]	24 VDC (22.8 ... 28.8 V) / 40 A		
787–845	48 VDC (39 ... 53 V) / 10 A		
787-847	48 VDC (39 ... 53 V) / 20 A		
EPSITRON® CLASSIC Power – Robust Power Supplies with Integrated TopBoost (Optional)			
787-1601 [b]	12 VDC (11.5 ... 14.5 V) / 2 A	1/2 x 85 ... 264 VAC 120 ... 372 VDC	• Slim design • Integrated TopBoost (787-16xx with ≥ 120 W) • DC OK signal/contact • Clear operating status indication via LED • Marking field for device identification • Up to 93 % efficiency • Ambient operating temperature: –25 °C ... +70 °C (device start at –40 °C type-tested) • Pluggable CAGE CLAMP® connection technology • UL 508, UL 60950, GL approvals • EN 60335-1 approval [b]
787-1611 [b]	12 VDC (11.5 ... 14.5 V) / 4 A		
787-1621 [b]	12 VDC (11.5 ... 14.5 V) / 7 A		
787-1631	12 VDC (11.5 ... 15 V) / 15 A		
787-1602 [b]	24 VDC (23 ... 28.5 V) / 1 A		
787-1606 [b]	24 VDC (23 ... 28.5 V) / 2 A		
787-1616 [b]	24 VDC (23 ... 28.5 V) / 4 A		
787-1616/0000-1000 [b]	24 VDC (23 ... 28.5 V) / 3.8 A LPS		
787-1622 [b]	24 VDC (23 ... 28.5 V) / 5 A		
787-1632	24 VDC (23 ... 28.5 V) / 10 A		
787-1634	24 VDC (23 ... 28.5 V) / 20 A		
787-1623 [b]	48 VDC (40 ... 56 V) / 2 A		
787-1633	48 VDC (40 ... 56 V) / 5 A		
787-1635	48 VDC (40 ... 56 V) / 10 A		
787-1628	24 VDC (23 ... 28.5 V) / 5 A	1/2 x AC 180 ... 500 V DC 254 ... 780 V	
787-1640	24 VDC (23 ... 28.5 V) / 10 A	2/3 x AC 320 ... 575 V DC 450 ... 800 V	
787-1642	24 VDC (23 ... 28.5 V) / 20 A		
787-1644	24 VDC (23 ... 28.5 V) / 40 A		
EPSITRON® ECO Power – Economical Power Supplies for Standard Applications			
787-712 [c]	24 VDC (22 ... 28 V) / 2.5 A	1 x 85 ... 264 VAC 130 ... 373 VDC	• Economically priced and robustly packaged in a metal housing • Clear operating status LED indication and optional DC OK contact • Up to 90 % efficiency • Ambient operating temperature: –25 °C ... +70 °C • Overhead mounting possible • UL 508, UL 60950 approvals • ATEX/IEC Ex approval, Zone 2 or Class I Div. 2 [c] • Tool-free connection technology [d]
787-722 [c]	24 VDC (22 ... 28 V) / 5 A		
787-732 [c]	24 VDC (22 ... 28 V) / 10 A		
787-734 [d]	24 VDC (22 ... 28 V) / 20 A	1 x 90 ... 264 VAC 130 ... 373 VDC	
787-736 [d]	24 VDC (22 ... 28 V) / 40 A		
787-738 [d]	24 VDC (22 ... 28 V) / 6.25 A	2/3 x 325 ... 575 VAC 460 ... 800 VDC	
787-740 [d]	24 VDC (22 ... 28 V) / 10 A		
787-742 [d]	24 VDC (22 ... 28 V) / 20 A		
787-1702	24 VDC (22 ... 26 V) / 1.25 A	1 x 90 ... 264 VAC 125 ... 375 VDC	• Economically supports basic applications • Flexible mounting via carrier rail adapter • Installation flexibility thanks to screw-mount clips • Up to 84 % efficiency • UL 508, UL 60950, EN 60335-1 approvals
787-1712	24 VDC (22 ... 26 V) / 2.5 A		
787-1722	24 VDC (22 ... 26 V) / 5 A		
787-1732	24 VDC (22 ... 26 V) / 10 A		
EPSITRON® COMPACT Power – Compact, High-Performance Power Supplies			
787-1001	12 VDC (10.8 ... 18 V) / 2 A	1 x 85 ... 264 VAC 120 ... 373 VDC	• Compact, low-profile design • Ideal for decentralized applications • Clear operating status indication via LED • Up to 88 % efficiency • Ambient operating temperature: –25 °C ... +60 °C (device start at –40 °C, type-tested) • Overhead mounting permitted • UL 508, UL 60950, GL approvals
787-1011	12 VDC (10.5 ... 15.5 V) / 4 A		
787-1021	12 VDC (10.5 ... 15.5 V) / 6.5 A		
787-1017	18 VDC (15 ... 28 V) / 2.5 A		
787-1002	24 VDC (22.8–26.4 V) / 1.3 A		
787-1012	24 VDC (22.8 ... 26.4 V) / 2.5 A		
787-1022	24 VDC (22.8 ... 26.4 V) / 4 A		
787-1020	5 VDC (4.5 ... 8.5 V) / 5.5 A		

	Item Number	Output	Input Voltage Range	Functional Description
EPSITRON® DC/DC Converters – Die zuverlässige Versorgung bei Sonderspannung				
	787-2801	5 VDC / 0.5 A	24 VDC (10 … 30 V)	• Full commoning of the supply voltage with both 857 and 2857 Series • DC OK contact • UL 508, UL 60950, GL approvals
	787-2802	10 VDC / 0.5 A	24 VDC (15 … 30 V)	
	787-2803	24 VDC / 0.25 A	48 VDC (40 … 55 V)	
	787-2805	12 VDC / 0.5 A	24 VDC (15 … 30 V)	
	787-2810	5 / 10 / 12 VDC, adjustable / 0.5 A	24 VDC (10 … 30 V)	
	787-1014	24 VDC / 2 A	110 VDC (77 … 140 V)	• Suitable for railway applications per EN 50155 • UL 508, UL 60950, GL approvals
	787-1014/0072-0000	24 VDC / 2 A	72 VDC (40 … 90 V)	
EPSITRON® – Uninterruptible Power Supplies (UPS) — Reliably Compensate for Long Power Outages				
	787-870	24 VDC (20 … 25.5 V) / 10 A	24 VDC	• Slim UPS charger and controller with convenient visualization and configuration • Optional power supply with integrated UPS charger and controller (787-1675) • Battery control technology for predictive maintenance that extends battery life • Pluggable CAGE CLAMP® connection technology • UL 508, UL 60950 approvals
	787-875	24 VDC (20 … 25.5 V) / 20 A		
	787-1675	23 … 28.5 VDC (mains operation) 18.5 … 27.5 VDC (battery operation)	1/2 x 85 … 264 VAC 110 … 370 VDC	
	787-876	24 VDC / max. 7.5 A / 1.2 Ah	24 VDC	
	787-871	24 VDC / max. 20 A / 3.2 Ah		
	787-872	24 VDC / max. 40 A / 7 Ah		
	787-873	24 VDC / max. 40 A / 12 Ah		
EPSITRON® – Capacitive Buffer Modules — Short-Term Power Reserves for Mains Failures and Load Changes				
	787-880	24 VDC (20.4 … 24 V) / 10 A	24 VDC	• Maintenance-free, high-energy gold caps • Integrated diodes for decoupling buffered loads from unbuffered loads • Parallel-connections possible • Indication via LED and contact • Configurable switch-on threshold • Ambient operating temperature: –10 °C … +50 °C • Pluggable CAGE CLAMP® connection technology • UL 508 approval
	787-881	24 VDC (20.4 … 24 V) / 20 A		
EPSITRON® Redundancy Modules — Reliably Increase a Power Supply's Stability				
	787-885	24 VDC / 20 A, max. 40 A	2 x 24 VDC	• Integrated power diodes with overload capability • Solutions for 12/24/48 VDC supply, up to 76 A • Parallel-connections possible, reverse voltage protection • Clear operating status LED indication and optional signal contact • Ambient operating temperature: –25 °C … +70 °C • UL 508, UL 60950 approvals
	787-886	48 VDC / 20 A, max. 40 A	2 x 48 VDC	
	787-783	9 … 54 VDC / 12.5 A, max. 25 A	2 x 9 … 54 VDC	
	787-785	9 … 54 VDC / 40 A, max. 76 A		
EPSITRON® – Electronic Circuit Breakers — Compact and Precise ECBs for DC Circuits				
	787-860	4 x 24 VDC / 1 … 6 A	24 VDC	• Two, four or eight channels with a 6-stage adjustable nominal current • Slim design, communication capability • High switch-on capacity reduces false tripping • Ambient operating temperature: –25 °C … +70 °C • Pluggable CAGE CLAMP® connection technology • UL 508 approval • Optional active current limitation [e] • UL 2367, GL approvals for all 787-166x [f] • With potential-free signal contact [g] • Specialty configuration [h]
	787-861 [e]	4 x 24 VDC / 1 … 8 A		
	787-862	4 x 24 VDC / 1 … 10 A		
	787-1662 [f]	2 x 24 VDC / 2 … 10 A		
	787-1662/0106-0000 [f]	2 x 24 VDC / 1 … 6 A		
	787-1662/0000-0004 [f, h]	2 x 24 VDC / 2 … 10 A		
	787-1662/0000-0054 [f, g, h]	2 x 24 VDC / 2 … 10 A		
	787-1662/0004-1000 [e, f]	2 x 24 VDC / 3.8 A		
	787-1662/0006-1000 [e, f]	2 x 24 VDC / 0.5 … 6 A		
	787-1662/0212-1000 [e, f]	2 x 24 VDC / 2 … 12 A		
	787-1664 [f]	4 x 24 VDC / 2 … 10 A		
	787-1664/0106-0000 [f]	4 x 24 VDC / 1 … 6 A		
	787-1664/0000-0004 [f, h]	4 x 24 VDC / 2 … 10 A		
	787-1664/0000-0054 [f, g, h]	4 x 24 VDC / 2 … 10 A		
	787-1664/0004-1000 [e, f]	4 x 24 VDC / 3.8 A		
	787-1664/0006-1000 [e, f]	4 x 24 VDC / 0.5 … 6 A		
	787-1664/0212-1000 [e, f]	4 x 24 VDC / 2 … 12 A		
	787-1664/0006-1054 [e, f, g, h]	4 x 24 VDC / 0.5 … 6 A		
	787-1668 [f]	8 x 24 VDC / 2 … 10 A		
	787-1668/0106-0000 [f]	8 x 24 VDC / 1 … 6 A		
	787-1668/0000-0004 [f, h]	8 x 24 VDC / 2 … 10 A		
	787-1668/0000-0054 [f, g, h]	8 x 24 VDC / 2 … 10 A		
	787-1668/0006-1000 [e, f]	8 x 24 VDC / 0.5 … 6 A		
	787-1668/0006-1054 [e, f, g, h]	4 x 24 VDC / 0.5 … 6 A		
	787-1662/0000-0100 [f]	2 x 12 VDC / 2 … 10 A	12 VDC	
	787-1664/0000-0100 [f]	4 x 12 VDC / 2 … 10 A		
	787-1662/0000-0200 [f]	2 x 48 VDC / 2 … 10 A	48 VDC	
	787-1662/0000-0250 [f, g]	2 x 48 VDC / 2 … 10 A		
	787-1664/0000-0200 [f]	4 x 48 VDC / 2 … 10 A		
	787-1664/0000-0250 [f, g]	4 x 48 VDC / 2 … 10 A		
	787-1668/0000-0200 [f]	8 x 48 VDC / 2 … 10 A		
	787-1668/0000-0250 [f, g]	8 x 48 VDC / 2 … 10 A		

Back-Up Capacitor Module

	Back-up capacitor module smoothes unstable 24 V DC power supplies Mounting carrier for DIN 35 rail	

This module is equipped with a capacitor which smoothes unstable 24VDC power supplies in case the voltage tolerances mentioned in our data sheets cannot be ensured. Reasons for voltage transients could be:

- Voltage disconnections (switching transients) on primary side
- Overloads on secondary side
- Switching of inductive or capacitive loads

The back-up capacitor module is connected between the 24V power supply and the electronic device which has to be protected.
Notice:
If using a non-filtered single-phase power supply, the capacitor causes a voltage increase.

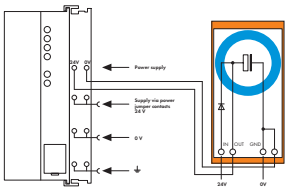

Description	Item No.	Pack. Unit	
Back-up capacitor module	**288-824**	1	

Technical Data

Nominal voltage	24 V DC (+25 %)	
Nominal current	1A	
Nominal capacity	10000 µF	
Weight	104.4g	
Dimensions (mm) W x H x L	38 x 81 x 85	
	Height from upper-edge of DIN 35 rail	
Wire connection	CAGE CLAMP®	
Cross sections	0.08 mm² ... 2.5 mm² / AWG 28 ... 14	
Strip lengths	5 ... 6 mm / 0.22 in	
Accessories		
WMB Multi marking system for mounting carrier	see page 674	
Marker strips for mounting carrier	white 709-198 / transparent 709-196	

Rail-Mounted Modules - DC/DC Converter

	24 V / 24 V; 0.21 A DC Mounting feet for DIN 35 rail	24 V / 18 V; 0.4 A DC Mounting carrier for DIN 35 rail

289-913

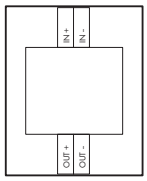

288-895

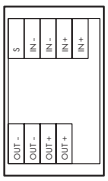

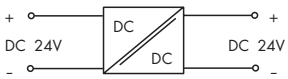

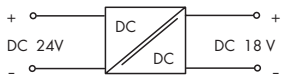

Description	Item No.	Pack. Unit	Item No.	Pack. Unit
DC/DC converter	**289-913**	1	**288-895**	1

Technical Data

Input voltage	24 V DC	24 V DC
Input voltage range	± 10%	18 V ... 36 V DC
Output voltage	24 V DC (± 3 %)	18 V DC (± 1 %)
Nominal output current	210mA	400mA
Peak output current	315 mA	
Efficiency	65 % ... 75 %	82 %
Test voltage input/output	DC 500 V	DC 1500 V
Short circuit protection	Thermal cut-out	permanent
Ambient operating temperature	-25°C ... +40°C	-25°C ... +70°C
Weight	77g	75g
Dimensions (mm) W x H x L	83 x 25 x 77	50 x 25 x 85
	Height from upper-edge of DIN 35 rail	Height from upper-edge of DIN 35 rail
Wire connection	CAGE CLAMP®	CAGE CLAMP®
Cross sections	0.08 mm² ... 2.5 mm² / AWG 28 ... 12 (THHN, THWN)	0.08 mm² ... 2.5 mm² / AWG 28 ... 12 (THHN, THWN)
Strip lengths	5 ... 6 mm / 0.22 in	5 ... 6 mm / 0.22 in

Accessories		
WMB Multi marking system for mounting carrier		see page 674
Marker strips for mounting carrier		white 709-198 / translucent 709-196

Interface Modules for System Wiring

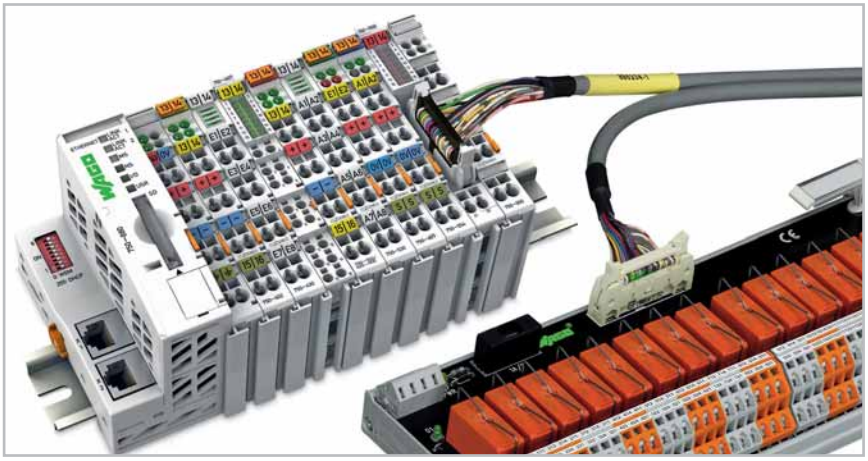

Digital input and output modules with ribbon cable connector provide easy and fast connection of WAGO interface modules to the WAGO-I/O-SYSTEM.
WAGO pre-assembled ribbon cables eliminate discrete wiring, while reducing costs for system wiring applications. Furthermore, modules can be pre-wired, also allowing the connection level to be relocated.

WAGO-I/O -SYSTEM 750				WAGO Ribbon Cable		WAGO Interface Modules	
		Item No.	I/O Modules		Item No.		
DI		750-1400	16 DI 24V DC 3.0 ms ribbon cable	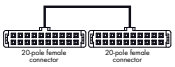	706-3057 / 0300-XXXX (see page 614)		Input module, 20-pole (see page 613)
		750-1402	16 DI 24V DC 3.0 ms ribbon cable, low-side switch	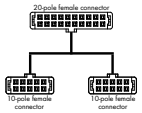	706-7753 / 0302-XXXX (see page 614)		Input module, 10-pole (see page 613)
DO		750-1500	16 DO 24V DC 0.5 A ribbon cable	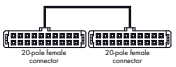	706-3057 / 0300-XXXX (see page 614)		Relay module, 16-channel (see page 608-611)
				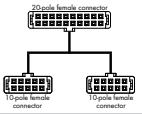	706-7753 / 0302-XXXX (see page 614)		Relay module, 8-channel (see page 612)
DI/DO		750-1502	8DI 8DO 24V DC 0.5 A ribbon cable	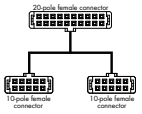	706-7753 / 0302-XXXX (see page 614)		Input module, 10-pole (see page 613)
							Relaismodul 8.fach (see page 612)

WAGO-I/O -SYSTEM 753				WAGO Ribbon Cable		WAGO Interface Modules	
DI		753-430 753-431 753-436 753-437	8 DI 8 DI 8 DI 8 DI	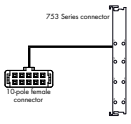	706-7753 / 0300-XXXX (see page 615)		Input module, 10-pole (see page 613)
		753-430 (x2) 753-431 (x2) 753-436 (x2) 753-437 (x2)	2 x 8 DI 2 x 8 DI 2 x 8 DI 2 x 8 DI	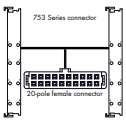	706-7753 / 0301-XXXX (see page 615)		Input module, 20-pole (see page 613)
DO		753-530	8 DO	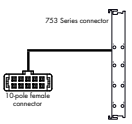	706-7753 / 0300-XXXX (see page 615)		Relay module, 8-channel (see page 612)
		753-530 (x2)	2 x 8 DO	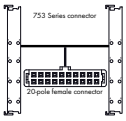	706-7753 / 0301-XXXX (see page 615)		Relay module, 16-channel (see page 608-611)

JUMPFLEX® Interface Adapter for System Wiring

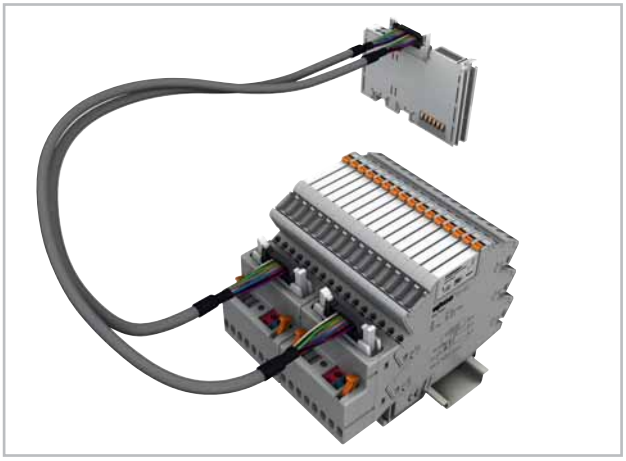

WAGO Interface Adapter, 857 Series

WAGO's Interface Adapter provides a fast wiring solution for relay and optocoupler modules within the JUMPFLEX® 857 Series. On the module side, pre-assembled WAGO Ribbon Cables (706 Series) connect to the WAGO-I/O-SYSTEM (PLC). This eliminates cumbersome discrete wiring between 750 Series I/O modules and 857 Series relays/optocouplers.
As a result, both installation time and costs are reduced.
Depending on the application, the WAGO interface adapters can be used with D-sub or ribbon cable connectors.
WAGO's interface adapters are equipped with status indicator.
They also feature integrated test ports for each channel.
The interface adapters are simply plugged into the 857 Series relay/optocoupler modules via jumper slot.
Furthermore, WAGO's interface adapter features locking devices for secure connection.

WAGO-I/O -SYSTEM 750				WAGO Ribbon Cable		WAGO Interface Modules	
		Item No.	I/O Modules		Item No.		
DI		750-1400 750-1402	16 DI 24V DC 3.0 ms ribbon cable 16 DI 24V DC 3.0 ms ribbon cable, low-side switch	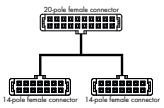	706-7753/304-100 (see page 618)		Item No.: 857-982 Output, positive switching 8-channel adapter with 14-pin ribbon cable connector acc. to DIN 41651 (see page 616)
DO		750-1500	16 DO 24V DC 0.5 A ribbon cable	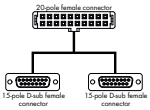	706-7753/306-100 (see page 619)		Item No.: 857-986 Input, positive switching 8-channel adapter with SUB-D male connector (see page 617)
				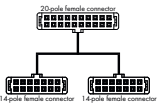	706-7753/304-100 (see page 618)		Item No.: 857-981 Input, positive switching 8-channel adapter with 14-pin ribbon cable connector acc. to DIN 41651 (see page 616)
DI/DO		750-1502	8DI 8DO 24V DC 0.5 A ribbon cable	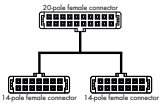	706-7753/304-100 (see page 618)		Item No.: 857-982 Output, positive switching 8-channel adapter with 14-pin ribbon cable connector acc. to DIN 41651 (see page 616)
							Item No.: 857-981 Input, positive switching 8-channel adapter with 14-pin ribbon cable connector acc. to DIN 41651 (see page 616)
				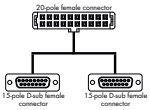	706-7753/306-100 (see page 619)		Item No.: 857-986 Input, positive switching 8-channel adapter with SUB-D male connector (see page 617)

Interface Modules for System Wiring

704 Series

	Relay output module with miniature switching relay for 16 channels, 1 changeover contact each (1 u) with integrated status indication, 20-pole connector acc. to DIN 41651	Relay output module with miniature switching relay for 16 channels, 1 changeover contact each (1 u) with integrated status indication and manual operation, 20-pole connector acc. to DIN 41651
	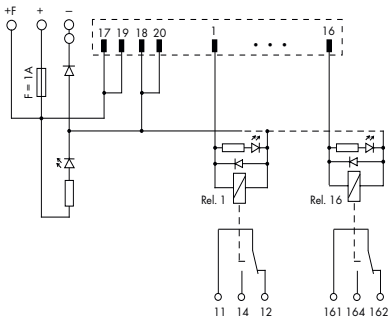	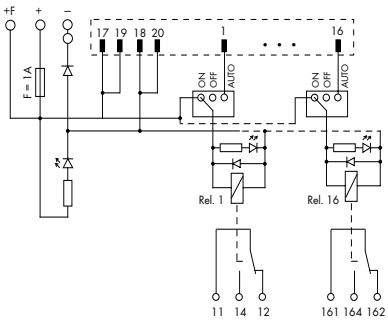

Description	Item No.	Pack. Unit	Item No.	Pack. Unit
Switching relay module, for DIN 35 rail	**704-5024**	1	**704-5044**	1
Technical Data				
Contact material	AgNi 90/10		AgNi 90/10	
Contact type	1 changeover contact		1 changeover contact	
Operating voltage	24 V DC (± 10 %)		24 V DC (± 10 %)	
Max. switching voltage	250 V AC / 48 V DC		250 V AC / 48 V DC	
Max. continuous current	5 A		5 A	
Max. switching power (resistive)	1250VA / 50W		1250VA / 50W	
Status indication	LED green : Channel		LED green : Channel	
	LED yellow : Power supply		LED yellow : Power supply	
Mechanical life	10 x 10^6 switching operations		10 x 10^6 switching operations	
Dielectric strength contact-coil (AC, 1 min)	4 kV		4 kV	
Dielectric strength contact-contact	1 kV		1 kV	
Fuse	Supply: 1 A		Supply: 1 A	
	Relay output: –		Relay output: –	
Ambient operating temperature	-25°C ... +40°C		-25°C ... +40°C	
Storage temperature	-40 °C ... +70 °C		-40 °C ... +70 °C	
Dimensions (mm) L x W x H	111 x 65 x 105		111 x 65 x 105	
incl. mounting carrier and relay				
	Height from upper-edge of DIN 35 rail		Height from upper-edge of DIN 35 rail	
Wire connection	Inpu: 20-pole connector acc. to DIN 41651		Inpu: 20-pole connector acc. to DIN 41651	
	Output: CAGE CLAMP®		Output: CAGE CLAMP®	
Cross sections	0.08 mm² ... 2.5 mm² / 28 ... 12 AWG		0.08 mm² ... 2.5 mm² / 28 ... 12 AWG	
Strip lengths	5 ... 6 mm / 0.2 ... 0.24 in.		5 ... 6 mm / 0.2 ... 0.24 in.	
Application examples	see page 606		see page 606	
Accessories	Spare relay 857-152		Spare relay 857-152	

	Relay output module with miniature switching relay for 16 channels, 1 changeover contact each (1 u) with integrated status indication, 20-pole connector acc. to DIN 41651	Relay output module with miniature switching relay for 16 channels, 1 changeover contact each (1 u) with integrated status indication and output fuse, 20-pole connector acc. to DIN 41651
		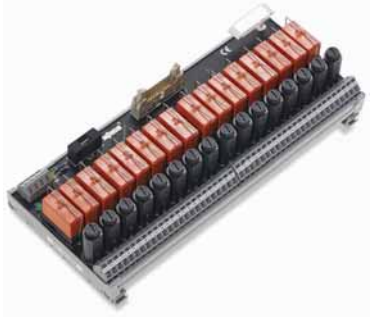
	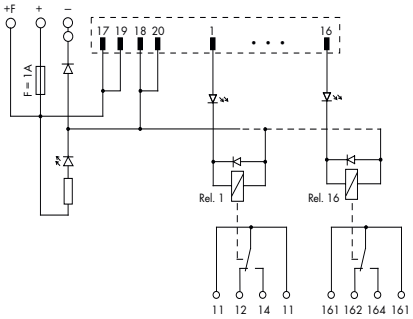	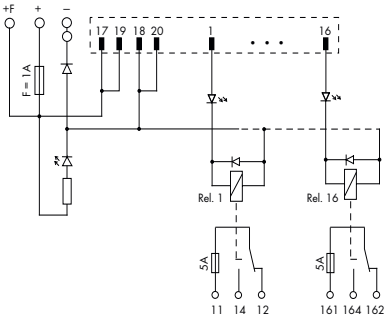

Description	Item No.	Pack. Unit	Item No.	Pack. Unit
Switching relay module, for DIN 35 rail	**704-5004**	1	**704-5034**	1
Switching relay module without miniature switching relay, for DIN 35 rail	**704-5014**	1		

Technical Data

Contact material	AgNi 90/10	AgNi 90/10
Contact type	1 changeover contact	1 changeover contact
Operating voltage	24 V DC (± 10 %)	24 V DC (± 10 %)
Max. switching voltage	250 V AC / 48 V DC	250 V AC / 48 V DC
Max. continuous current	5 A	5 A
Inrush current	2s, 16A	2s, 16A
Max. switching power (resistive)	1250VA / 50W	1250VA / 50W
Status indication	LED green : Channel	LED green : Channel
	LED yellow : Power supply	LED yellow : Power supply
Mechanical life	30 x 10^6 switching operations	30 x 10^6 switching operations
Dielectric strength contact-coil (AC, 1 min)	3 kV	4 kV
Dielectric strength contact-contact	1 kV	1 kV
Fuse	Supply: 1 A	Supply: 1 A
	Relay output: –	Relay output: 5 A
Ambient operating temperature	-25°C ... +50°C	-25°C ... +50°C
Storage temperature	-40 °C ... +70 °C	-40 °C ... +70 °C
Dimensions (mm) L x W x H	180 x 50 x 105	247 x 55 x 105
incl. mounting carrier and relay		
	Height from upper-edge of DIN 35 rail	Height from upper-edge of DIN 35 rail
Wire connection	Inpu: 20-pole connector acc. to DIN 41651	Inpu: 20-pole connector acc. to DIN 41651
	Output: CAGE CLAMP®	Output: CAGE CLAMP®
Cross sections	0.08 mm² ... 2.5 mm² / 28 ... 12 AWG	0.08 mm² ... 2.5 mm² / 28 ... 12 AWG
Strip lengths	5 ... 6 mm / 0.2 ... 0.24 in.	5 ... 6 mm / 0.2 ... 0.24 in.
Application examples	see page 606	see page 606
Accessories	Spare relay 788-154	Spare relay 788-154

Interface Modules for System Wiring

704 Series

	Relay output module with miniature switching relay for 16 channels, 1 make contact each (1 a) with integrated status indication, disconnect terminal block and output fuse, 20-pole connector acc. to DIN 41651	Relay output module with miniature switching relay for 16 channels, 1 make contact each (1 a) with integrated status indication, double disconnect terminal block and output fuse, 20-pole connector acc. to DIN 41651
	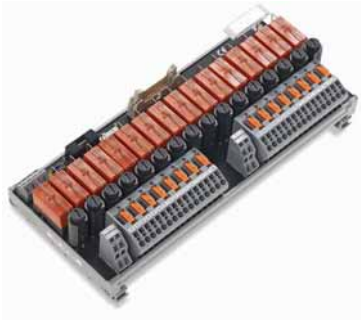	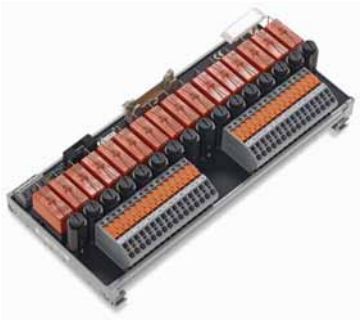
	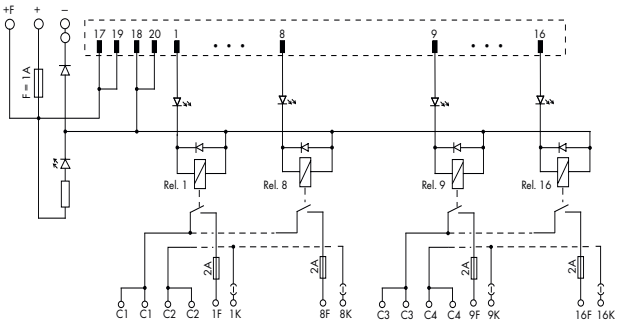	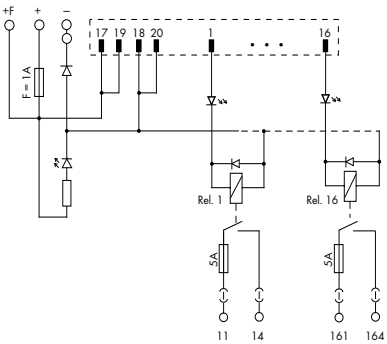

Description	Item No.	Pack. Unit	Item No.	Pack. Unit
Switching relay module, for DIN 35 rail	**704-5054**	1	**704-5074**	1
Technical Data				
Contact material	AgNi 90/10		AgNi 90/10	
Contact type	1 make contact		1 make contact	
Operating voltage	24 V DC (± 10 %)		24 V DC (± 10 %)	
Max. switching voltage	250 V AC / 48 V DC		250 V AC / 48 V DC	
Max. continuous current	2 A		5 A	
Max. switching power (resistive)	500VA / 50W		1250VA / 50W	
Status indication	LED green : Channel		LED green : Channel	
	LED yellow : Power supply		LED yellow : Power supply	
Mechanical life	30 x 10^6 switching operations		30 x 10^6 switching operations	
Dielectric strength contact-coil (AC, 1 min)	4 kV		4 kV	
Dielectric strength contact-contact	1 kV		1 kV	
Fuse	Supply: 1 A		Supply: 1 A	
	Relay output: 2 A		Relay output: 5 A	
Ambient operating temperature	-25°C ... +50°C		-25°C ... +50°C	
Storage temperature	-40 °C ... +70 °C		-40 °C ... +70 °C	
Dimensions (mm) L x W x H	240 x 55 x 105		240 x 55 x 105	
incl. mounting carrier and relay				
	Height from upper-edge of DIN 35 rail		Height from upper-edge of DIN 35 rail	
Wire connection	Inpu: 20-pole connector acc. to DIN 41651		Inpu: 20-pole connector acc. to DIN 41651	
	Output: CAGE CLAMP®		Output: CAGE CLAMP®	
Cross sections	0.08 mm² ... 2.5 mm² / 28 ... 12 AWG		0.08 mm² ... 2.5 mm² / 28 ... 12 AWG	
Strip lengths	5 ... 6 mm / 0.2 ... 0.24 in.		5 ... 6 mm / 0.2 ... 0.24 in.	
Application examples	see page 606		see page 606	
Accessories	Spare relay 788-154		Spare relay 788-154	

	Relay output module with miniature switching relay for 16 channels, 2 changeover contacts each (2 u) with integrated status indication, 20-pole connector acc. o DIN 41651	

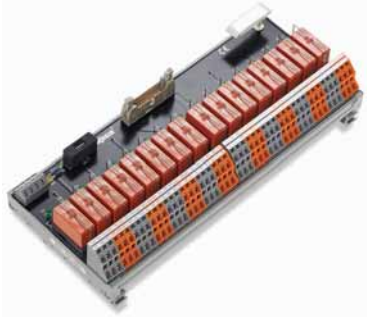

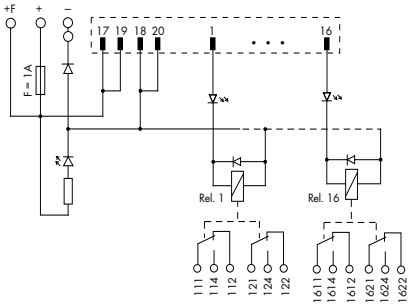

Description	Item No.	Pack. Unit	
Switching relay module, for DIN 35 rail	**704-5064**	1	

Technical Data

Contact material	AgNi 90/10	
Contact type	2 changeover contact	
Operating voltage	24 V DC (± 10 %)	
Max. switching voltage	250 V AC / 48 V DC	
Max. continuous current	5 A	
Inrush current	2s, 8A	
Max. switching power (resistive)	1000VA / 50W	
Status indication	LED green : Channel	
	LED yellow : Power supply	
Mechanical life	30 x 10^6 switching operations	
Dielectric strength contact-coil (AC, 1 min)	4 kV	
Dielectric strength contact-contact	1 kV	
Fuse	Supply: 1 A	
	Relay output: –	
Ambient operating temperature	-25 °C ... +50 °C	
Storage temperature	-40 °C ... +70 °C	
Dimensions (mm) L x W x H	247 x 50 x 105	
incl. mounting carrier and relay		
	Height from upper-edge of DIN 35 rail	
Wire connection	Inpu: 20-pole connector acc. to DIN 41651	
	Output: CAGE CLAMP®	
Cross sections	0.08 mm² ... 2.5 mm² / 28 ... 12 AWG	
Strip lengths	5 ... 6 mm / 0.2 ... 0.24 in.	
Application examples	see page 606	
Accessories	Spare relay 788-156	

Interface Modules for System Wiring

704 Series

	Relay output module with miniature switching relay for 8 channels, 1 changeover contact each (1 u) with integrated status indication, 10-pole connector acc. to DIN 41651	Relay output module with miniature switching relay for 8 channels, 1 changeover contact each (1 u) with integrated status indication and manual operation, 10-pole connector acc. to DIN 41651
	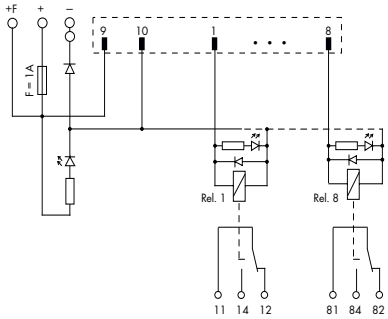	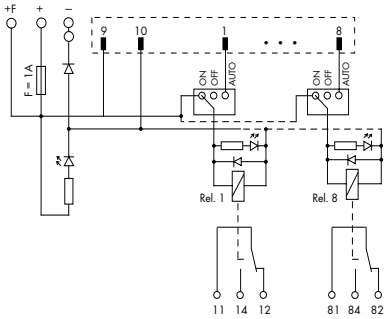

Description	Item No.	Pack. Unit	Item No.	Pack. Unit
Switching relay module, for DIN 35 rail	**704-5003**	1	**704-5013**	1

Technical Data

Contact material	AgNi 90/10	AgNi 90/10
Contact type	1 changeover contact	1 changeover contact
Operating voltage	24 V DC (± 10 %)	24 V DC (± 10 %)
Max. switching voltage	250 V AC / 48 V DC	250 V AC / 48 V DC
Max. continuous current	5 A	5 A
Max. switching power (resistive)	1250VA / 50W	1250VA / 50W
Status indication	LED green : Channel	LED green : Channel
	LED yellow : Power supply	LED yellow : Power supply
Mechanical life	10 x 10^6 switching operations	10 x 10^6 switching operations
Dielectric strength contact-coil (AC, 1 min)	4 kV	4 kV
Dielectric strength contact-contact	1 kV	1 kV
Fuse	Supply: 1 A	Supply: 1 A
	Relay output: –	Relay output: –
Ambient operating temperature	-25°C ... +40°C	-25°C ... +40°C
Storage temperature	-40 °C ... +70 °C	-40 °C ... +70 °C
Dimensions (mm) L x W x H	70 x 65 x 105	70 x 65 x 105
incl. mounting carrier and relay		
	Height from upper-edge of DIN 35 rail	Height from upper-edge of DIN 35 rail
Wire connection	Inpu: 10-pole connector acc. to DIN 41651	Inpu: 10-pole connector acc. to DIN 41651
	Output: CAGE CLAMP®	Output: CAGE CLAMP®
Cross sections	0.08 mm² ... 2.5 mm² / 28 ... 12 AWG	0.08 mm² ... 2.5 mm² / 28 ... 12 AWG
Strip lengths	5 ... 6 mm / 0.2 ... 0.24 in.	5 ... 6 mm / 0.2 ... 0.24 in.
Application examples	see page 606	see page 606
Accessories	Spare relay 857-152	Spare relay 857-152

Interface Modules

	Interface module for ribbon cable connectors acc. to DIN 41651 Mounting carrier for DIN 35 rail	Interface module for ribbon cable connectors acc. to DIN 41651 Mounting carrier for DIN 35 rail
	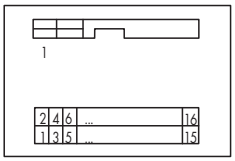	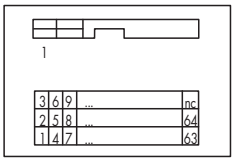

Description	No. of Poles	Width	Item No.	Pack. Unit	No. of Poles	Width	Item No.	Pack. Unit
Interface module	10	35	**289-611**	1	20	47	**289-614**	1

Technical Data

Operating voltage	125 V AC / DC	125 V AC / DC
Nominal current	1 A	1 A
Connector contact	phosphor-bronze, 0.38 µm Au selectively over 1.3 µm Ni	phosphor-bronze, 0.38 µm Au selectively over 1.3 µm Ni
Performance level	3	3
Nominal voltage acc. to VDE 0110 Part 1/4.97,		
IEC 60664-1	125 V / 0.8 kV / 2	125 V / 0.8 kV / 2
Mounting direction	vertical	vertical
Ambient operating temperature	-20 °C ... +55 °C	-20 °C ... +55 °C
Storage temperature	-40 °C ... +70 °C	-40 °C ... +70 °C
Dimensions (mm) W x H x L incl.		
mounting feet or mounting carrier	W x 48 x 85	W x 62 x 85
	Height from upper-edge of DIN 35 rail	Height from upper-edge of DIN 35 rail
Wire connection	CAGE CLAMP®	CAGE CLAMP®
Cross sections	0.08 mm² ... 2.5 mm² / AWG 28 ... 12	0.08 mm² ... 2.5 mm² / AWG 28 ... 12
Stripped lengths	5 ... 6 mm / 0.22 in	5 ... 6 mm / 0.22 in
Standards/Specifications	IEC 60603-1 / DIN 41651 Part 1 and 2	IEC 60603-1 / DIN 41651 Part 1 and 2

WAGO Interface Cables

for 289, 704 Series, in connection with WAGO-I/O-SYSTEM 750

WAGO Interface Cables provide fast and easy connection of WAGO I/O modules equipped with a HE 10 connector (750-1400, -1402, -1500, -1501, 1502) to appropriate interface or relay modules (16-channel) featuring a 20-pole HE 10 connector. The cables are available in 1-, 2- and 3-meter lengths; each has one 20-pole connector at both ends.

Description	Item No.	Pack. Unit
WAGO Interface Cable 20/20, lenght 1 m	**706-3057/300-100**	1
WAGO Interface Cable 20/20, lenght 2 m	**706-3057/300-200**	1
WAGO Interface Cable 20/20, lenght 3 m	**706-3057/300-300**	1

Technical Data	
Ports	2 x 20-pole connector acc. to DIN 41651
Wire cross-section	0.14 mm² LiYY
Color coding	acc. to DIN VDE 47100
Current per channel	max. 1A
Operating temperature	-25°C ... +70°C
Degree of protection	IP20
Length	1 m (706-3057/300-100) 2 m (706-3057/300-200) 3 m (706-3057/300-300)

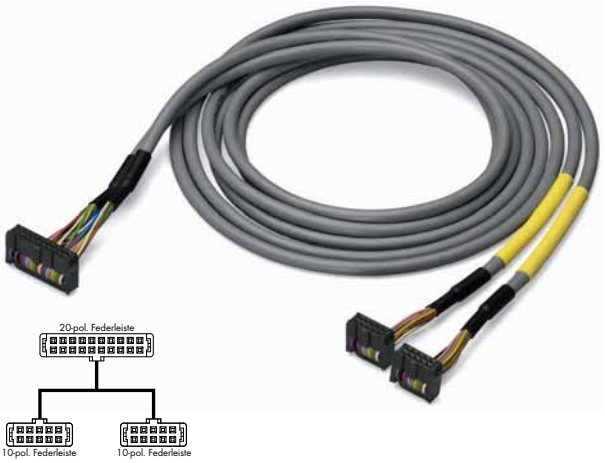

WAGO Interface Cables provide fast and easy connection of WAGO I/O modules equipped with a HE 10 connector (750-1400, -1402, -1500, -1501, 1502) to appropriate interface or relay modules featuring a 10-pole HE 10 connector. For example, this cable connects 2 relay modules (8-channel) to a WAGO I/O module. The cables are available in 1- and 2-meter lengths; each has one 20-pole and two 10-pole connectors on the ends.

Description	Item No.	Pack. Unit
WAGO Interface Cable 20/2x10, lenght 1 m	**706-7753/302-100**	1
WAGO Interface Cable 20/2x10, lenght 2 m	**706-7753/302-200**	1

Technical Data	
Ports	1 x 20-pole / 2 x 10-pole connector acc. to DIN 41651
Wire cross-section	0.14 mm² LiYY
Color coding	acc. to DIN VDE 47100
Current per channel	max. 1A
Operating temperature	-25°C ... +70°C
Degree of protection	IP20
Length	1 m (706-7753/302-100) 2 m (706-7753/302-200)

WAGO Interface Cables

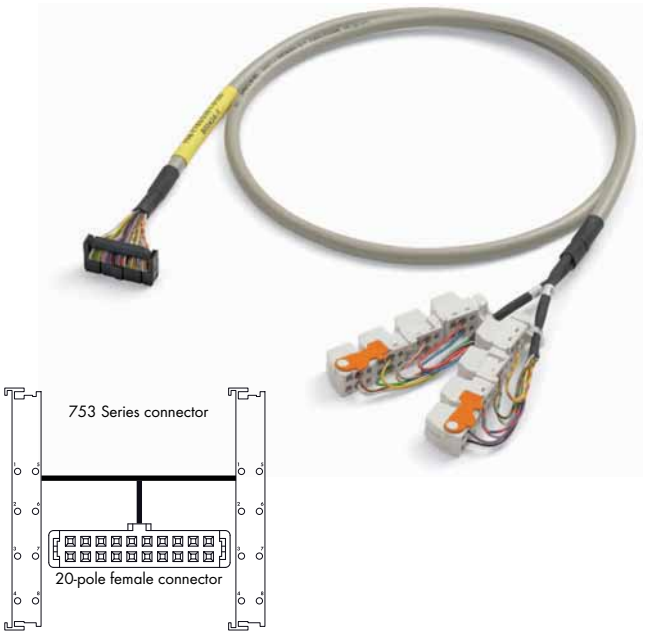

WAGO Interface Cables provide fast and easy connection of WAGO I/O modules equipped with pluggable connectors (e.g., 753-430, -431, -530) to appropriate interface or relay modules featuring a 10-pole female connector.

WAGO Interface Cables provide fast and easy connection of WAGO I/O modules equipped with pluggable connectors (e.g., 753-430, -431, -530) to appropriate interface or relay modules featuring a 20-pole female connector

For example, this cable connects two WAGO I/O modules to one relay output module (16-channel).

Description	Item No.	Pack. Unit
WAGO Interface Cable with 753 Series pluggable connector/10-pole, 1 m long	**706-7753/300-100**	1
For other cable lengths, please contact factory		

Technical Data	
Wire cross-section	0,14 mm² LiYY
Color coding	nach DIN VDE 47100
Current per channel	max. 1 A
Operating temperature *	-25 °C ... +70 °C
Degree of protection	IP20
Length	1 m

Description	Item No.	Pack. Unit
WAGO Interface Cable, 2 x 753 Series pluggable connector/20-pole, 2 m long	**706-7753/301-200**	1
For other cable lengths, please contact factory		

Technical Data	
Wire cross-section	0,14 mm² LiYY
Color coding	nach DIN VDE 47100
Current per channel	max. 1 A
Operating temperature *	-25 °C ... +70 °C
Degree of protection	IP20
Length	2 m

* Observe maximum operating temperature of the WAGO I/O modules used.

Interface Modules for System Wiring

Interface Adapters, 857 Series

	8-channel adapter with 14-pin connector acc. to DIN 41651 Input, positive switching	8-channel adapter with 14-pin connector acc. to DIN 41651 Output, positive switching

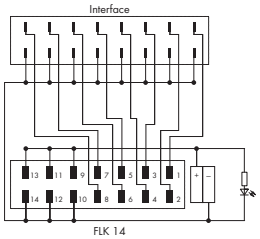

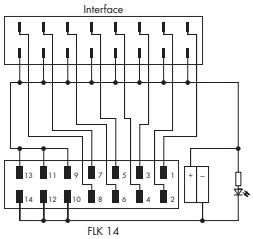

Description	Item No.	Pack. Unit	Item No.	Pack. Unit
8-channel adapter for system wiring	**857-981**	1	**857-982**	1

Technical Data

Connection type, signal level	14-pole connector acc. to DIN 41651	14-pin connector acc. to DIN 41651
Performance level	3	3
Contact resistance	≤ 20mΩ	≤ 20mΩ
Current carrying capacity	1A	1A
Test voltage	500 V / 50 Hz / 1 min.	500 V / 50 Hz / 1 min.
Nominal supply voltage V_S	24 VDC	24 VDC
Supply voltage range	16.8 V ... 31.2 V	16.8 V ... 31.2 V
Max. total current	3 A	3 A
Operational indication	LED, green	LED, green
Connection type, supply	231 Series with CAGE CLAMP®	231 Series with CAGE CLAMP®
Cross sections	0.08 mm² ... 2.5 mm² / 28 ... 14 AWG	0.08 mm² ... 2.5 mm² / 28 ... 14 AWG
Strip lengths	5 ... 6 mm / 0.2 ... 0.24 in.	5 ... 6 mm / 0.2 ... 0.24 in.

**8-channel adapter
with D-sub male connector,
Input, positive switching**

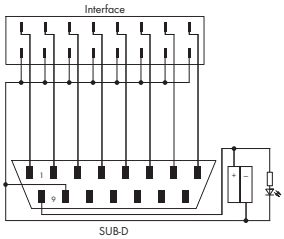

Description	Item No.	Pack. Unit	
8-channel adapter for system wiring	**857-986**	1	

Technical Data

Connection type, signal level	15-pin D-sub male connector	
Performance level	2	
Contact resistance	≤ 10mΩ	
Current carrying capacity	1A	
Test voltage	500 V / 50 Hz / 1 min.	
Nominal supply voltage V_S	24 VDC	
Supply voltage range	16.8 V ... 31.2 V	
Max. total current	3 A	
Operational indication	LED, green	
Connection type, supply	231 Series with CAGE CLAMP®	
Cross sections	0.08 mm² ... 2.5 mm² / 28 ... 14 AWG	
Strip lengths	5 ... 6 mm / 0.2 ... 0.24 in.	

WAGO Interface Cables

for Interface Adapter, 857 Series

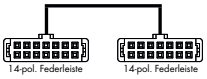

The 14-pin WAGO Interface Cables transmit signals one-to-one from the 14-pole connector and are available in 1-, 2- and 3-meter lengths.

Suitable for system wiring when combined with the Interface Adapters (Item No. 857-981 and 857-982)

Description	Item No.	Pack. Unit
WAGO Interface Cable 14/14, 1m long	**706-753/300-100**	1
WAGO Interface Cable 14/14, 2m long	**706-753/300-200**	1
WAGO Interface Cable 14/14, 3m long	**706-753/300-300**	1

Technical Data	
Ports	2 x 14-pole connector acc. to DIN 41651
Wire cross-section	0.14 mm² LiYY
Color coding	acc. to DIN VDE 47100
Current per channel	max. 1 A
Operating temperature	-25 °C ... +70 °C
Degree of protection	IP20
Length	1 m (706-753/300-100) 2 m (706-753/300-200) 3 m (706-753/300-300)

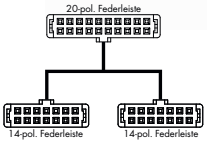

WAGO Interface Cables provide fast and easy connection of WAGO I/O modules featuring ribbon cable connectors. The following WAGO I/O modules and adapters are compatible:

750-1500 (16 DO) – > 857-981 (DO)

750-1502 (8 DO / 8 DI) –> 857-981 (DO) and 857-982 (DI)

The cables are available in 1-, 2- and 3-meter lengths – each has one 20-pole or two 14-pole connectors on the ends.

Suitable for system wiring when combined with Interface Adapters (Item No. 857-981 and 857-982)

Description	Item No.	Pack. Unit
WAGO Interface Cable 20/2x14, 1m long	**706-7753/304-100**	1
WAGO Interface Cable 20/2x14, 2m long	**706-7753/304-200**	1
WAGO Interface Cable 20/2x14, 3m long	**706-7753/304-300**	1

Technical Data	
Ports	1 x 20-pole connector / 2 x 14-pole connector acc. to DIN 41651
Wire cross-section	0.14 mm² LiYY
Color coding	acc. to DIN VDE 47100
Current per channel	max. 1 A
Operating temperature	-25 °C ... +70 °C
Degree of protection	IP20
Length	1 m (706-7753/304-100) 2 m (706-7753/304-200) 3 m (706-7753/304-300)

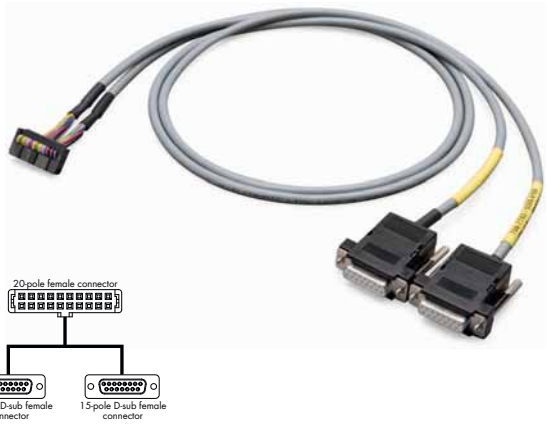

WAGO Interface Cables provide fast and easy connection of WAGO I/O modules featuring ribbon cable connectors. The following WAGO I/O modules and D-sub adapters are compatible:
750-1500 (16 DO) –> 857-986 (DO)
The cables are available in 1-, 2- and 3-meter lengths – each has one 20-pole or two 15-pole connectors on the ends.

Suitable for system wiring when combined with Interface Adapter (Item No. 857-986)

Description	Item No.	Pack. Unit
WAGO Interface Cable 20/2x15, 1m long	**706-7753/306-100**	1
WAGO Interface Cable 20/2x15, 2m long	**706-7753/306-200**	1
WAGO Interface Cable 20/2x15, 3m long	**706-7753/306-300**	1

Technical Data	
Ports	1 x 20-pole connector to DIN 41651 / 2 x 15-pole D-sub female connector acc. to DIN 41652
Wire cross-section	0.14 mm² LiYY
Color coding	acc. to DIN VDE 47100
Current per channel	max. 1 A
Operating temperature	-25 °C ... +70 °C
Degree of protection	IP20
Length	1 m (706-7753/306-100) 2 m (706-7753/306-200) 3 m (706-7753/306-300)

Description	Item No.	Pack. Unit
WAGO Interface Cable, 10-pole/ one free cable end, lenght 2 m	**706-100/1301-200**	1
WAGO Interface Cable, 16-pole/ one free cable end, lenght 2 m	**706-100/1602-200**	1
WAGO Interface Cable, 20-pole/ one free cable end, lenght 2 m	**706-100/1300-200**	1
WAGO Interface Cable, 14-pole/ one free cable end, lenght 2 m	**706-100/1303-200**	1

Technical Data	
Ports	HE 10 connector/one free cable end 10-pole (706-100/1301-200) 16-pole (706-100/1602-200) 20-pole (706-100/1300-200) 14-pole (706-100/1303-200)
Wire cross-section	0,14 mm² LiYY
Color coding	acc. to DIN VDE 47100
Current per channel	max. 1 A
Operating temperature	-25 °C ... +70 °C
Degree of protection	IP20
Length	2 m

IP67 Cables and Connectors, 756 Series

IP67 Cables and Connectors

Series 756 offers a wide range of accessories for the connection of inductive or capacitive proximity switches, light barriers, flow control devices, push buttons etc. to the WAGO-I/O-SYSTEM 757 (IP67 sensor/actuator boxes) and WAGO-Speedway 767 (modular IO system IP67). The cables are not only a protection against dust and water, the design of their coupling nuts also provides protectionagainst mechanical loosening when exposed to vibrations.
In addition to that, fixed cables offer bend protection.

Cables with one or two preassembled wire ends are used.
Cables with one preassembled wire end are often used when the length of the cable cannot be predetermined exactly or when the cable assembly with connectors proves to be difficult. Cables with one free wire end can therefore be adapted to individual prerequisites. Cables with two preassembled wire ends drastically reduce assembly and installation time.

IP67 Cables and Connectors, 756 Series

Sensor/actuator cables, with one end of cable fitted

M8 Socket

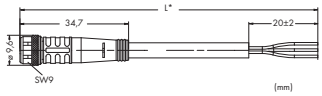

3-pole

Pin 1 - 4: 0.34 mm²

1 brown (+)
3 blue (-)
4 black (S)

M8 Sensor/actuator cables, with one end of cable fitted		Cable diameter	Item No.	Pack. Unit
3-pole,	M8 socket, straight, one free cable end, 1.5 m	4.1 mm ± 0.2	**756-5101/030-015**	10
	M8 socket, straight, one free cable end, 5.0 m	4.1 mm ± 0.2	**756-5101/030-050**	10
	M8 socket, straight, one free cable end, 10 m	4.1 mm ± 0.2	**756-5101/030-100**	10

M8 Socket

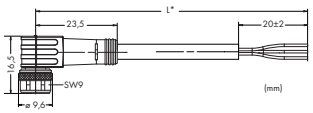

3-pole

Pin 1 - 4: 0.34 mm²

1 brown (+)
3 blue (-)
4 black (S)

M8 Sensor/actuator cables, with one end of cable fitted		Cable diameter	Item No.	Pack. Unit
3-pole,	M8 socket, right angle, one free cable end, 1.5 m	4.1 mm ± 0.2	**756-5102/030-015**	10
	M8 socket, right angle, one free cable end, 5.0 m	4.1 mm ± 0.2	**756-5102/030-050**	10
	M8 socket, right angle, one free cable end, 10 m	4.1 mm ± 0.2	**756-5102/030-100**	10

M12 Socket

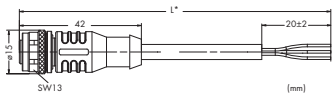

3-pole

4-pole

5-pole

Pin 1 - 5: 0.34 mm²

1 brown (+)
2 white (Ö)
3 blue (-)
4 black (S)
5 gray

M12 Sensor/actuator cables, with one end of cable fitted		Cable diameter	Item No.	Pack. Unit
3-pole,	M12 socket, straight, one free cable end, 1.5 m	4.3 mm ± 0.2	**756-5301/030-015**	10
	M12 socket, straight, one free cable end, 5.0 m	4.3 mm ± 0.2	**756-5301/030-050**	10
	M12 socket, straight, one free cable end, 10 m	4.3 mm ± 0.2	**756-5301/030-100**	10
4-pole,	M12 socket, straight, one free cable end, 1.5 m	4.7 mm ± 0.2	**756-5301/040-015**	10
	M12 socket, straight, one free cable end, 5.0 m	4.7 mm ± 0.2	**756-5301/040-050**	10
	M12 socket, straight, one free cable end, 10 m	4.7 mm ± 0.2	**756-5301/040-100**	10
5-pole,	M12 socket, straight, one free cable end, 1.5 m	5.0 mm ± 0.2	**756-5301/050-015**	10
	M12 socket, straight, one free cable end, 5.0 m	5.0 mm ± 0.2	**756-5301/050-050**	10
	M12 socket, straight, one free cable end, 10 m	5.0 mm ± 0.2	**756-5301/050-100**	10
5-pole, shielded	M12 socket, straight, one free cable end, 1.5 m	6.5 mm ± 0.2	**756-5301/060-015**	10
	M12 socket, straight, one free cable end, 5.0 m	6.5 mm ± 0.2	**756-5301/060-050**	10
	M12 socket, straight, one free cable end, 10 m	6.5 mm ± 0.2	**756-5301/060-100**	10

M12 Socket

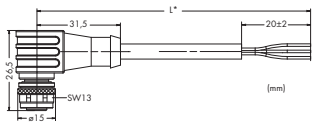

3-pole

4-pole

5-pole

Pin 1 - 5: 0.34 mm²

1 brown (+)
2 white (Ö)
3 blue (-)
4 black (S)
5 gray

M12 Sensor/actuator cables, with one end of cable fitted		Cable diameter	Item No.	Pack. Unit
3-pole,	M12 socket, right angle, one free cable end, 1.5 m	4.3 mm ± 0.2	**756-5302/030-015**	10
	M12 socket, right angle, one free cable end, 5.0 m	4.3 mm ± 0.2	**756-5302/030-050**	10
	M12 socket, right angle, one free cable end, 10 m	4.3 mm ± 0.2	**756-5302/030-100**	10
4-pole,	M12 socket, right angle, one free cable end, 1.5 m	4.7 mm ± 0.2	**756-5302/040-015**	10
	M12 socket, right angle, one free cable end, 5.0 m	4.7 mm ± 0.2	**756-5302/040-050**	10
	M12 socket, right angle, one free cable end, 10 m	4.7 mm ± 0.2	**756-5302/040-100**	10
5-pole,	M12 socket, right angle, one free cable end, 1.5 m	5.0 mm ± 0.2	**756-5302/050-015**	10
	M12 socket, right angle, one free cable end, 5.0 m	5.0 mm ± 0.2	**756-5302/050-050**	10
	M12 socket, right angle, one free cable end, 10 m	5.0 mm ± 0.2	**756-5302/050-100**	10
5-pole, shielded	M12 socket, right angle, one free cable end, 1.5 m	6.5 mm ± 0.2	**756-5302/060-015**	10
	M12 socket, right angle, one free cable end, 5.0 m	6.5 mm ± 0.2	**756-5302/060-050**	10
	M12 socket, right angle, one free cable end, 10 m	6.5 mm ± 0.2	**756-5302/060-100**	10

* Cable length

Custom cable lengths upon request

IP67 Cables and Connectors, 756 Series

Sensor/actuator cables, with one end of cable fitted

M8 Plug

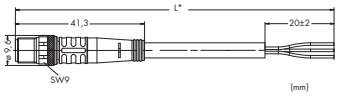

Pin 1 - 4: 0.34 mm²

1 brown (+)
3 blue (-)
4 black (S)

M8 Sensor/actuator cables, with one end of cable fitted		Cable diameter	Item No.	Pack. Unit
3-pole	M8 plug, straight, one free cable end, 1.5 m	4.1 mm ± 0.2	**756-5111/030-015**	10
	M8 plug, straight, one free cable end, 5 m	4.1 mm ± 0.2	**756-5111/030-050**	10
	M8 plug, straight, one free cable end, 10 m	4.1 mm ± 0.2	**756-5111/030-100**	10

M8 Plug

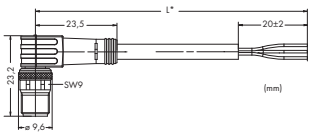

Pin 1 - 4: 0.34 mm²

1 brown (+)
3 blue (-)
4 black (S)

M8 Sensor/actuator cables, with one end of cable fitted		Cable diameter	Item No.	Pack. Unit
3-pole	M8 plug, right angle, one free cable end, 1.5 m	4.1 mm ± 0.2	**756-5112/030-015**	10
	M8 plug, right angle, one free cable end, 5 m	4.1 mm ± 0.2	**756-5112/030-050**	10
	M8 plug, right angle, one free cable end, 10 m	4.1 mm ± 0.2	**756-5112/030-100**	10

M12 Plug

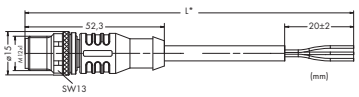

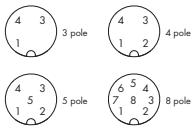

Pin 1 - 5: 0.34 mm²

1 brown (+)
2 white (Ö)
3 blue (-)
4 black (S)
5 gray

Pin 1 - 8: 0.25 mm²

1 white
2 brown
3 green
4 yellow
5 gray
6 pink
7 blue
8 red
Shield (screen)

M12 Sensor/actuator cables, with one end of cable fitted		Cable diameter	Item No.	Pack. Unit
3-pole	M12 plug, straight, one free cable end, 1.5 m	4.3 mm ± 0.2	**756-5311/030-015**	1
	M12 plug, straight, one free cable end, 5 m	4.3 mm ± 0.2	**756-5311/030-050**	1
	M12 plug, straight, one free cable end, 10 m	4.3 mm ± 0.2	**756-5311/030-100**	1
4-pole	M12 plug, straight, one free cable end, 1.5 m	4.7 mm ± 0.2	**756-5311/040-015**	1
	M12 plug, straight, one free cable end, 5 m	4.7 mm ± 0.2	**756-5311/040-050**	1
	M12 plug, straight, one free cable end, 10 m	4.7 mm ± 0.2	**756-5311/040-100**	1
5-pole	M12 plug, straight, one free cable end, 1.5 m	5.0 mm ± 0.2	**756-5311/050-015**	1
	M12 plug, straight, one free cable end, 5 m	5.0 mm ± 0.2	**756-5311/050-050**	1
	M12 plug, straight, one free cable end, 10 m	5.0 mm ± 0.2	**756-5311/050-100**	1
5-pole, shielded	M12 plug, straight, one free cable end, 1.5 m	6.5 mm ± 0.2	**756-5311/060-015**	1
	M12 plug, straight, one free cable end, 5 m	6.5 mm ± 0.2	**756-5311/060-050**	1
	M12 plug, straight, one free cable end, 10 m	6.5 mm ± 0.2	**756-5311/060-100**	1
8-pole, shielded	M12 plug, straight, one free cable end, 1.5 m	6,3 mm ± 0,2	**756-5311/090-015**	1
	M12 plug, straight, one free cable end, 5 m	6,3 mm ± 0,2	**756-5311/090-050**	1
	M12 plug, straight, one free cable end, 10 m	6,3 mm ± 0,2	**756-5311/090-100**	1

M12 Plug

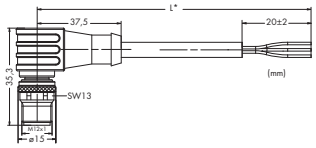

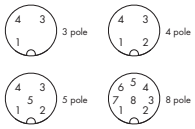

Pin 1 - 5: 0.34 mm²

1 brown (+)
2 white (Ö)
3 blue (-)
4 black (S)
5 gray

Pin 1 - 8: 0.25 mm²

1 white
2 brown
3 green
4 yellow
5 gray
6 pink
7 blue
8 red
Shield (screen)

M12 Sensor/actuator cables, with one end of cable fitted		Cable diameter	Item No.	Pack. Unit
3-pole	M12 plug, right angle, one free cable end, 1.5 m	4.3 mm ± 0.2	**756-5312/030-015**	1
	M12 plug, right angle, one free cable end, 5 m	4.3 mm ± 0.2	**756-5312/030-050**	1
	M12 plug, right angle, one free cable end, 10 m	4.3 mm ± 0.2	**756-5312/030-100**	1
4-pole	M12 plug, right angle, one free cable end, 1.5 m	4.7 mm ± 0.2	**756-5312/040-015**	1
	M12 plug, right angle, one free cable end, 5 m	4.7 mm ± 0.2	**756-5312/040-050**	1
	M12 plug, right angle, one free cable end, 10 m	4.7 mm ± 0.2	**756-5312/040-100**	1
5-pole	M12 plug, right angle, one free cable end, 1.5 m	5.0 mm ± 0.2	**756-5312/050-015**	1
	M12 plug, right angle, one free cable end, 5 m	5.0 mm ± 0.2	**756-5312/050-050**	1
	M12 plug, right angle, one free cable end, 10 m	5.0 mm ± 0.2	**756-5312/050-100**	1
5-pole, shielded	M12 plug, right angle, one free cable end, 1.5 m	6.5 mm ± 0.2	**756-5312/060-015**	1
	M12 plug, right angle, one free cable end, 5 m	6.5 mm ± 0.2	**756-5312/060-050**	1
	M12 plug, right angle, one free cable end, 10 m	6.5 mm ± 0.2	**756-5312/060-100**	1
8-pole, shielded	M12 plug, right angle, one free cable end, 1.5 m	6,3 mm ± 0,2	**756-5312/090-015**	1
	M12 plug, right angle, one free cable end, 5 m	6,3 mm ± 0,2	**756-5312/090-050**	1
	M12 plug, right angle, one free cable end, 10 m	6,3 mm ± 0,2	**756-5312/090-100**	1

* Cable length, Custom cable lengths upon request

IP67 Cables and Connectors, 756 Series

Sensor/actuator cables, both ends of the cable are fitted with plug/socket

M8 Socket M8 Plug

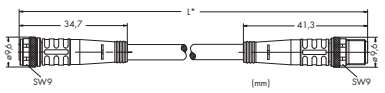

Pin 1 - 4: 0.34 mm²

1 brown (+)
3 blue (-)
4 black (S)

M8/M8 Sensor/actuator cables, both ends of the cable are fitted with plug/socket		Cable diameter	Item No.	Pack. Unit
3-pole,	M8 socket, straight/M8 plug, straight, 1.0 m	4.0 mm ± 0.1	**756-5201/030-010**	10
	M8 socket, straight/M8 plug, straight, 2.0 m	4.0 mm ± 0.1	**756-5201/030-020**	10

M8 Socket M8 Plug

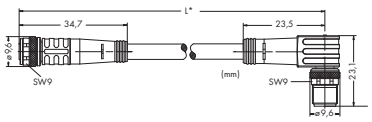

Pin 1 - 4: 0.34 mm²

1 brown (+)
3 blue (-)
4 black (S)

M8/M8 Sensor/actuator cables, both ends of the cable are fitted with plug/socket		Cable diameter	Item No.	Pack. Unit
3-pole,	M8 socket, straight/M8 plug, right angle, 1.0 m	4.3 mm ± 0.2	**756-5202/030-010**	10
	M8 socket, straight/M8 plug, right angle, 2.0 m	4.3 mm ± 0.2	**756-5202/030-020**	10

M8 Socket M8 Plug

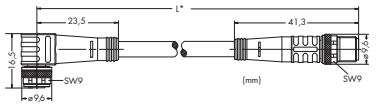

Pin 1 - 4: 0.34 mm²

1 brown (+)
3 blue (-)
4 black (S)

M8/M8 Sensor/actuator cables, both ends of the cable are fitted with plug/socket		Cable diameter	Item No.	Pack. Unit
3-pole,	M8 socket, right angle/M8 plug, straight, 1.0 m	4.0 mm ± 0.1	**756-5203/030-010**	10
	M8 socket, right angle/M8 plug, straight, 1.0 m	4.0 mm ± 0.1	**756-5203/030-020**	10

M8 Socket M8 Plug

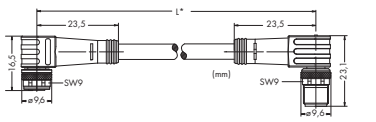

Pin 1 - 4: 0.34 mm²

1 brown (+)
3 blue (-)
4 black (S)

M8/M8 Sensor/actuator cables, both ends of the cable are fitted with plug/socket		Cable diameter	Item No.	Pack. Unit
3-pole,	M8 socket, right angle/M8 plug, right angle, 1.0m	4.3 mm ± 0.2	**756-5204/030-010**	1
	M8 socket, right angle/M8 plug, right angle, 2.0m	4.3 mm ± 0.2	**756-5204/030-020**	10

* Cable length

Custom cable lengths upon request

IP67 Cables and Connectors, 756 Series

Sensor/actuator cables, both ends of the cable are fitted with plug/socket

M8 Socket **M12 Plug**

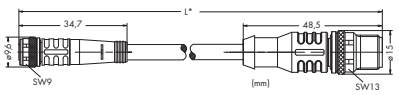

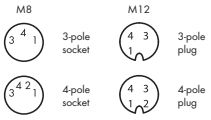

Pin 1 - 4: 0.34 mm²

1 brown (+)
2 white (Ö)
3 blue (-)
4 black (S)

M8/M12 Sensor/actuator cables, both ends of the cable are fitted with plug/socket		Cable diameter	Item No.	Pack. Unit
3-pole,	M8 socket, straight/M12 plug, straight, 1.0 m	4.0 mm ± 0.1	**756-5507/030-010**	10
	M8 socket, straight/M12 plug, straight, 2.0 m	4.0 mm ± 0.1	**756-5507/030-020**	10
4-pole,	M8 socket, straight/M12 plug, straight, 1.0 m	4.0 mm ± 0.1	**756-5507/040-010**	10
	M8 socket, straight/M12 plug, straight, 2.0 m	4.0 mm ± 0.1	**756-5507/040-020**	10

M8 Socket **M12 Plug**

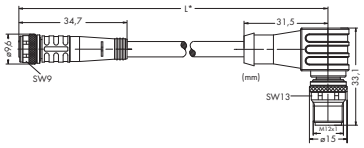

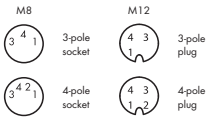

Pin 1 - 4: 0.34 mm²

1 brown (+)
2 white (Ö)
3 blue (-)
4 black (S)

M8/M12 Sensor/actuator cables, both ends of the cable are fitted with plug/socket		Cable diameter	Item No.	Pack. Unit
3-pole,	M8 socket, straight/M12 plug, right angle, 1.0 m	4.0 mm ± 0.1	**756-5508/030-010**	10
	M8 socket, straight/M12 plug, right angle, 2.0 m	4.0 mm ± 0.1	**756-5508/030-020**	10
4-pole,	M8 socket, straight/M12 plug, right angle, 1.0 m	4.0 mm ± 0.1	**756-5508/040-010**	10
	M8 socket, straight/M12 plug, right angle, 2.0 m	4.0 mm ± 0.1	**756-5508/040-020**	10

M8 Socket **M12 Plug**

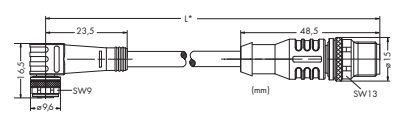

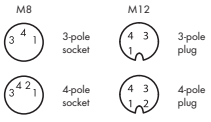

Pin 1 - 4: 0.34 mm²

1 brown (+)
2 white (Ö)
3 blue (-)
4 black (S)

M8/M12 Sensor/actuator cables, both ends of the cable are fitted with plug/socket		Cable diameter	Item No.	Pack. Unit
3-pole,	M8 socket, right angle/M12 plug, straight, 1.0 m	4.0 mm ± 0.1	**756-5509/030-010**	10
	M8 socket, right angle/M12 plug, straight, 2.0 m	4.0 mm ± 0.1	**756-5509/030-020**	10
4-pole,	M8 socket, right angle/M12 plug, straight, 1.0 m	4.0 mm ± 0.1	**756-5509/040-010**	10
	M8 socket, right angle/M12 plug, straight, 2.0 m	4.0 mm ± 0.1	**756-5509/040-020**	10

M8 Socket **M12 Plug**

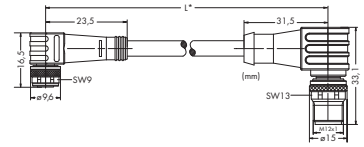

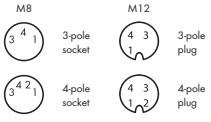

Pin 1 - 4: 0.34 mm²

1 brown (+)
2 white (Ö)
3 blue (-)
4 black (S)

M8/M12 Sensor/actuator cables, both ends of the cable are fitted with plug/socket		Cable diameter	Item No.	Pack. Unit
3-pole,	M8 socket, right angle/M12 plug, right angle, 1.0 m	4.0 mm ± 0.1	**756-5510/030-010**	10
	M8 socket, right angle/M12 plug, right angle, 2.0m	4.0 mm ± 0.1	**756-5510/030-020**	10
4-pole,	M8 socket, right angle/M12 plug, right angle, 1.0 m	4.0 mm ± 0.1	**756-5510/040-010**	10
	M8 socket, right angle/M12 plug, right angle, 2.0 m	4.0 mm ± 0.1	**756-5510/040-020**	10

* Cable length

Custom cable lengths upon request

IP67 Cables and Connectors, 756 Series

Sensor/actuator cables, both ends of the cable are fitted with plug/socket

M12 Socket **M8 Plug**

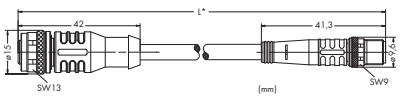

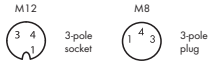

Pin 1 - 4: 0.34 mm²

1 brown (+)
3 blue (-)
4 black (S)

M12/M8 Sensor/actuator cables, both ends of the cable are fitted with plug/socket		Cable diameter	Item No.	Pack. Unit
3-pole,	M12 socket, straight/M8 plug, straight, 1.0 m	4.0 mm ± 0.1	**756-5501/030-010**	10
	M12 socket, straight/M8 plug, straight, 2.0 m	4.0 mm ± 0.1	**756-5501/030-020**	1

M12 Socket **M8 Plug**

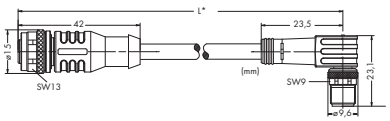

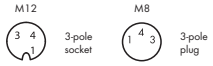

Pin 1 - 4: 0.34 mm²

1 brown (+)
3 blue (-)
4 black (S)

M12/M8 Sensor/actuator cables, both ends of the cable are fitted with plug/socket		Cable diameter	Item No.	Pack. Unit
3-pole,	M12 socket, straight/M8 plug, right angle, 1.0 m	4.3 mm ± 0.2	**756-5502/030-010**	10
	M12 socket, straight/M8 plug, right angle, 2.0 m	4.3 mm ± 0.2	**756-5502/030-020**	10

M12 Socket **M8 Plug**

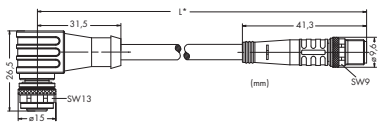

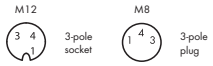

Pin 1 - 4: 0.34 mm²

1 brown (+)
3 blue (-)
4 black (S)

M12/M8 Sensor/actuator cables, both ends of the cable are fitted with plug/socket		Cable diameter	Item No.	Pack. Unit
3-pole,	M12 socket, right angle/M8 plug, straight, 1.0 m	4.0 mm ± 0.1	**756-5503/030-010**	10
	M12 socket, right angle/M8 plug, straight, 2.0 m	4.0 mm ± 0.1	**756-5503/030-020**	10

M12 Socket **M8 Plug**

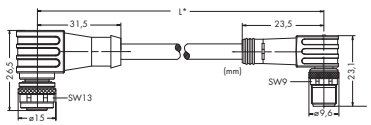

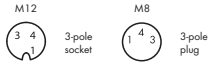

Pin 1 - 4: 0.34 mm²

1 brown (+)
3 blue (-)
4 black (S)

M12/M8 Sensor/actuator cables, both ends of the cable are fitted with plug/socket		Cable diameter	Item No.	Pack. Unit
3-pole,	M12 socket, right angle/M8 plug, right angle, 1.0 m	4.3 mm ± 0.2	**756-5504/030-010**	10
	M12 socket, right angle/M8 plug, right angle, 2.0 m	4.3 mm ± 0.2	**756-5504/030-020**	10

* Cable length

Custom cable lengths upon request

IP67 Cables and Connectors, 756 Series

Sensor/actuator cables, both ends of the cable are fitted with plug/socket

M12 Socket M12 Plug

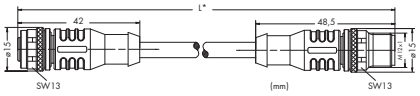

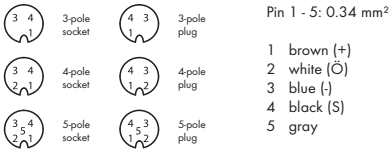

Pin 1 - 5: 0.34 mm²

1 brown (+)
2 white (Ö)
3 blue (-)
4 black (S)
5 gray

M12/M12 Sensor/actuator cables, both ends of the cable are fitted with plug/socket		Cable diameter	Item No.	Pack. Unit
3-pole,	M12 socket, straight/M12 plug, straight, 1.0 m	4.3 mm ± 0.2	**756-5401/030-010**	10
	M12 socket, straight/M12 plug, straight, 2.0 m	4.3 mm ± 0.2	**756-5401/030-020**	10
4-pole,	M12 socket, straight/M12 plug, straight, 1.0 m	4.7 mm ± 0.2	**756-5401/040-010**	10
	M12 socket, straight/M12 plug, straight, 2.0 m	4.7 mm ± 0.2	**756-5401/040-020**	10
5-pole,	M12 socket, straight/M12 plug, straight, 1.0 m	5.0 mm ± 0.2	**756-5401/050-010**	10
	M12 socket, straight/M12 plug, straight, 2.0 m	5.0 mm ± 0.2	**756-5401/050-020**	10
5-pole, shielded	M12 socket, straight, M12 plug, straight, 1.0 m	6.5 mm ± 0.2	**756-5401/060-010**	1
	M12 socket, straight, M12 plug, straight, 2.0 m	6.5 mm ± 0.2	**756-5401/060-020**	1

M12 Socket M12 Plug

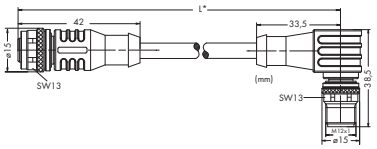

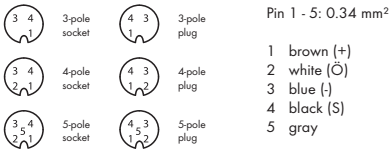

Pin 1 - 5: 0.34 mm²

1 brown (+)
2 white (Ö)
3 blue (-)
4 black (S)
5 gray

M12/M12 Sensor/actuator cables, both ends of the cable are fitted with plug/socket		Cable diameter	Item No.	Pack. Unit
3-pole,	M12 socket, straight/M12 plug, right angle, 1.0 m	4.3 mm ± 0.2	**756-5402/030-010**	10
	M12 socket, straight/M12 plug, right angle, 2.0 m	4.3 mm ± 0.2	**756-5402/030-020**	10
4-pole,	M12 socket, straight/M12 plug, right angle, 1.0 m	4.7 mm ± 0.2	**756-5402/040-010**	10
	M12 socket, straight/M12 plug, right angle, 2.0 m	4.7 mm ± 0.2	**756-5402/040-020**	10
5-pole,	M12 socket, straight/M12 plug, right angle, 1.0 m	5.0 mm ± 0.2	**756-5402/050-010**	10
	M12 socket, straight/M12 plug, right angle, 2.0 m	5.0 mm ± 0.2	**756-5402/050-020**	10
5-pole, shielded	M12 socket, straight, M12 plug, right angle, 1.0 m	6.5 mm ± 0.2	**756-5402/060-010**	1
	M12 socket, straight, M12 plug, right angle, 2.0 m	6.5 mm ± 0.2	**756-5402/060-020**	1

M12 Socket M12 Plug

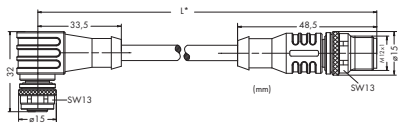

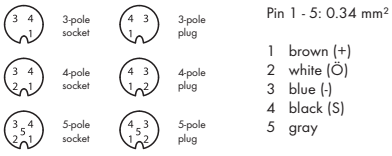

Pin 1 - 5: 0.34 mm²

1 brown (+)
2 white (Ö)
3 blue (-)
4 black (S)
5 gray

M12/M12 Sensor/actuator cables, both ends of the cable are fitted with plug/socket		Cable diameter	Item No.	Pack. Unit
3-pole,	M12 socket, right angle/M12 plug, straight, 1.0 m	4.3 mm ± 0.2	**756-5403/030-010**	10
	M12 socket, right angle/M12 plug, straight, 2.0 m	4.3 mm ± 0.2	**756-5403/030-020**	10
4-pole,	M12 socket, right angle/M12 plug, straight, 1.0 m	4.7 mm ± 0.2	**756-5403/040-010**	10
	M12 socket, right angle/M12 plug, straight, 2.0 m	4.7 mm ± 0.2	**756-5403/040-020**	10
5-pole,	M12 socket, right angle/M12 plug, straight, 1.0 m	5.0 mm ± 0.2	**756-5403/050-010**	10
	M12 socket, right angle/M12 plug, straight, 2.0 m	5.0 mm ± 0.2	**756-5403/050-020**	10
5-pole, shielded	M12 socket, right angle, M12 plug, straight, 2.0 m	6.5 mm ± 0.2	**756-5403/060-010**	1
	M12 socket, right angle, M12 plug, straight, 2.0 m	6.5 mm ± 0.2	**756-5403/060-020**	1

M12 Socket M12 Plug

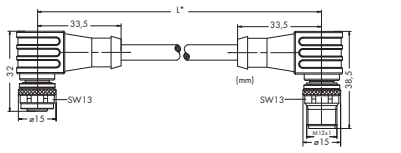

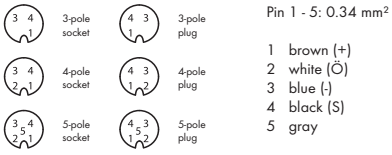

Pin 1 - 5: 0.34 mm²

1 brown (+)
2 white (Ö)
3 blue (-)
4 black (S)
5 gray

M12/M12 Sensor/actuator cables, both ends of the cable are fitted with plug/socket		Cable diameter	Item No.	Pack. Unit
3-pole,	M12 socket, right angle/M12 plug, right angle, 1.0 m	4.3 mm ± 0.2	**756-5404/030-010**	10
	M12 socket, right angle/M12 plug, right angle, 2.0 m	4.3 mm ± 0.2	**756-5404/030-020**	10
4-pole,	M12 socket, right angle/M12 plug, right angle, 1.0 m	4.7 mm ± 0.2	**756-5404/040-010**	10
	M12 socket, right angle/M12 plug, right angle, 2.0 m	4.7 mm ± 0.2	**756-5404/040-020**	10
5-pole,	M12 socket, right angle/M12 plug, right angle, 1.0 m	5.0 mm ± 0.2	**756-5404/050-010**	10
	M12 socket, right angle/M12 plug, right angle, 2.0 m	5.0 mm ± 0.2	**756-5404/050-020**	10
5-pole, shielded	M12 socket, right angle, M12 plug, right angle, 1.0 m	6.5 mm ± 0.2	**756-5404/060-010**	1
	M12 socket, right angle, M12 plug, right angle, 2.0 m	6.5 mm ± 0.2	**756-5404/060-020**	1

* Cable length

Custom cable lengths upon request

IP67 Cables and Connectors, 756 Series

Sensor/actuator distribution components

M12 Distribution Plug

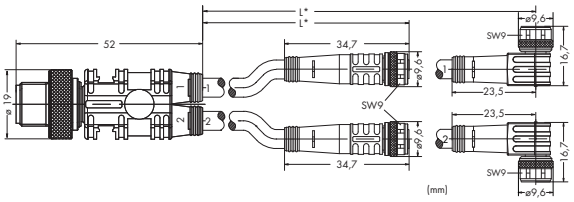

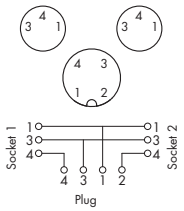

Pin 1 - 4: 0.34 mm²

M8/M12 Sensor/actuator distribution cables, both ends of the cable are fitted with plug/socket		Cable diameter	Item No.	Pack. Unit
4-pole,	2 x M8 socket, straight/M12 plug, straight, 1.0 m	4.1 mm ± 0.2	**756-5513/040-010**	10
	2 x M8 socket, straight/M12 plug, straight, 2.0 m	4.1 mm ± 0.2	**756-5513/040-020**	10
	2 x M8 socket, right angle/M12 plug, straight, 1.0 m	4.1 mm ± 0.2	**756-5514/040-010**	10
	2 x M8 socket, right angle/M12 plug, straight, 2.0 m	4.1 mm ± 0.2	**756-5514/040-020**	10

M12 Distribution Plug

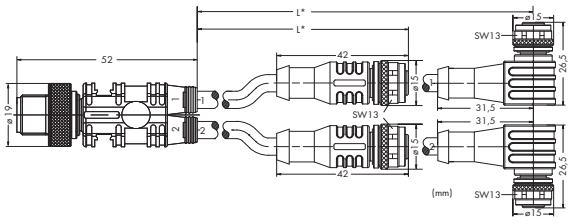

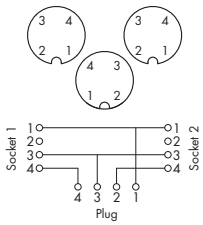

Pin 1 - 4: 0.34 mm²

M12/M12 Sensor/actuator distribution cables, both ends of the cable are fitted with plug/socket		Cable diameter	Item No.	Pack. Unit
4-pole,	2 x M12 socket, straight/M12 plug, straight, 1.0 m	4.7 mm ± 0.2	**756-5516/040-010**	1
	2 x M12 socket, straight/M12 plug, straight, 2.0 m	4.7 mm ± 0.2	**756-5516/040-020**	10
	2 x M12 socket, right angle/M12 plug, straight, 1.0 m	4.7 mm ± 0.2	**756-5517/040-010**	10
	2 x M12 socket, right angle/M12 plug, straight, 2.0 m	4.7 mm ± 0.2	**756-5517/040-020**	10

* Cable length

Custom cable lengths upon request

M12/M12

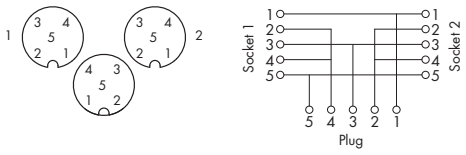

M8/M12

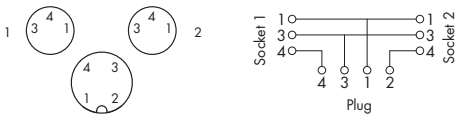

Sensor/actuator twin distribution connector	Item No.	Pack. Unit
M12/M12 twin distribution connector	**756-9301/050-000**	1
M8/M12 twin distribution connector	**756-9301/040-000**	1

M8

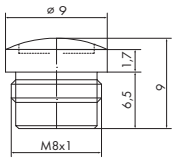

M12

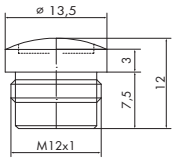

Protective caps (for covering unused sensor/actuator connectors)	Item No.	Pack. Unit
M8 protective cap	**756-8101**	10
M12 protective cap	**756-8102**	10

IP67 Cables and Connectors, 756 Series

Connectors for self assembly

M8 Plug

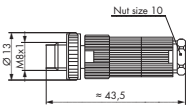

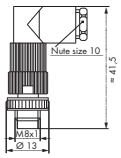

3-pole

Conductor sizes
Ø 4 ... 5 mm/0.14 ... 0.34 mm²

M8 Plug, for self assembly, unshielded		Item No.	Pack. Unit
3-pole	M8 plug, straight, pin penetration	**756-9102/030-000**	5
	M8 plug, right angle, pin penetration	**756-9105/030-000**	5

M8 Socket

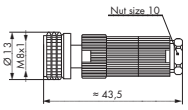

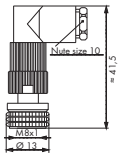

3 pole

Conductor sizes
Ø 4 ... 5 mm/0.14 ... 0.34 mm²

M8 Socket, for self assembly, unshielded		Item No.	Pack. Unit
3-pole	M8 socket, straight, pin penetration	**756-9112/030-000**	5
	M8 socket, right angle, pin penetration	**756-9115/030-000**	5

M12 Plug

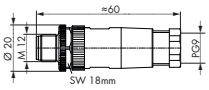

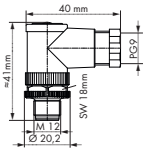

4-pole

5-pole

Conductor sizes
Ø 4 ... 6 mm/0.25 ... 0.75 mm²
(screw clamp connection)
Ø 4 ... 6 mm/0.14 ... 0.50 mm²
(spring clamp connection)

M12 Plug, for self assembly, unshielded		Item No.	Pack. Unit
4-pole	M12 plug, straight, screw clamp connection	**756-9201/040-000**	5
	M12 plug, right angle, screw clamp connection	**756-9204/040-000**	5
	M12 plug, straight, spring clamp technology	**756-9202/040-000**	5
	M12 plug, right angle, spring clamp technology	**756-9205/040-000**	5
5-pole	M12 plug, straight, screw clamp connection	**756-9201/050-000**	5
	M12 plug, right angle, screw clamp connection	**756-9204/050-000**	5
	M12 plug, straight, spring clamp technology	**756-9202/050-000**	5
	M12 plug, right angle, spring clamp technology	**756-9205/050-000**	5

M12 Socket

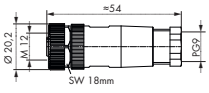

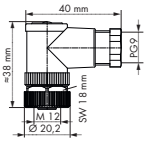

Conductor sizes
Ø 4 ... 6 mm/0.25 ... 0.75 mm²
(screw clamp connection)
Ø 4 ... 6 mm/0.14 ... 0.50 mm²
(spring clamp connection)

M12 Socket, for self assembly, unshielded		Item No.	Pack. Unit
4-pole	M12 socket, straight, screw clamp connection	**756-9211/040-000**	5
	M12 socket, right angle, screw clamp connection	**756-9214/040-000**	5
	M12 socket, straight, spring clamp technology	**756-9212/040-000**	5
	M12 socket, right angle, spring clamp technology	**756-9215/040-000**	5
5-pole	M12 socket, straight, spring clamp technology	**756-9212/050-000**	5
	M12 socket, right angle, spring clamp technology	**756-9215/050-000**	5

IP67 Cables and Connectors, 756 Series

Configurable shielded connectors

M12 Plug

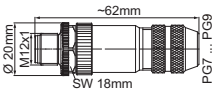

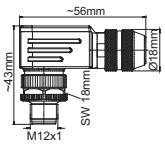

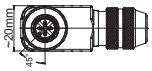

Conductor size
Ø 6 ... 8 mm/0.14 ... 0.50 mm²

M12 Plug, for self assembly		Item No.	Pack. Unit
M12 plug, A coded, straight, spring clamp technology	5-pole, shielded	**756-9207/060-000**	1
M12 plug, A coded, right angle, spring clamp technology		**756-9211/060-000**	1

M12 Socket

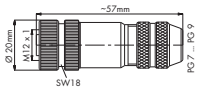

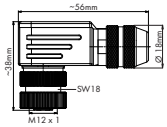

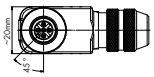

Conductor size
Ø 6 ... 8 mm
screw clamp connection:
0.14 ... 0.75 mm²
spring clamp connection:
0.14 ... 0.5 mm²

M12 Socket, for self assembly		Item No.	Pack. Unit
M12 socket, A coded, straight, spring clamp technology	5-pole, shielded	**756-9208/060-000**	1
M12 socket, A coded, right angle, spring clamp technology		**756-9210/060-000**	1
M12 socket, straight, screw clamp connection	8-pole, shielded	**756-9211/090-000**	1
M12 socket, right angle, screw clamp connection		**756-9214/090-000**	1

IP67 Cables and Connectors, 756 Series
Technical Data

Technical Data	M8 connecting cable	M12 connecting cable
General		
Operating voltage		
3-pole (0.34 mm² conductor)	60 V AC/DC	250 V AC/DC
4-pole (0.34 mm² conductor)	60 V AC/DC	250 V AC/DC
5-pole (0.34 mm² conductor)	-/-	60 V AC/DC
8-pole (0.25 mm² conductor)		32 V AC/DC
Operating current (see also derating curve)	max. 4 A	
Rated surge voltage (IEC 61076-2-101)		
3-pole	1.5 kV	2.5 kV
4-pole	1.5 kV	2.5 kV
5-pole	-/-	1.5 kV
8-pole	-/-	0.8 kV
Insulation resistance (IEC 61076-2-101	$> 10^9$ Ω, $> 10^8$ Ω (8-pole)	
Contact resistance (IEC 61076-2-101	≤ 10 mΩ	
Resistance of conductor	≤ 60 Ω/km	
Degree of pollution (VDE 0110)	III	
Degree of protection (IEC 60529)	IP68 (in fully locked position), IP67 (8-pole)	
Operating temperature (see also derating curve)		
moved	-25 °C ... +90 °C [1+2)]	
static	-50 °C ... +90 °C [1)]	
	[1)] according to UL max. 80 °C	
	[2)] in drag chains or under high mechanical stress +60 °C	
Suitable for drag chain applications		
Bending radius	min. 10 x cable ⌀	
Bending cycles	≥ 2 million	
Acceleration	max. 5 m/s²	
Path feed rate	max. 200 m/min	
Path	max. 5 m horizontal, max. 2 m vertical	
	± 180° per meter length	
	Silicone and CFC free, resistant to oil, hydrolysis and microbes	
Cables		
Designation	LiF9YH-11YH and Li9YC11YFHF	
Comment	designed according to UL + CSA, UL AWM style 21198, core style 10493	
Conductor (3/4/5 conductor 0.34 mm²)	fine-stranded bare copper conductors, (42 x 0.1 mm)	
Conductor (8 conductor 0.25 mm²)	fine-stranded bare copper conductors, (32 x 0.1 mm)	
Conductor insulation	PP9Y or TPM, halogen free	
Outer jacket	Polyurethane (OPUR) halogen free acc. to DIN VDE 0472 part 815	
	flame retardant acc. to IEC 332-2, self-extinguishing	
	color: black (≈ RAL 9005)	
Cable ⌀ 3-pole	⌀ 4.3 mm ± 0.2	
Cable ⌀ 4-pole	⌀ 4.7 mm ± 0.2	
Cable ⌀ 5-pole and 5-pole shielded		⌀ 5.2 mm ± 0.2 and ⌀ 5.6 mm ± 0.2
Cable ⌀ 8-pole and 8-pole shielded		⌀ 6.3 mm ± 0.2
Connectors		
Moulded body/housing material	PA, Polyurethane (PUR), black (≈ RAL 9005)	
Contact material	CuSn (BZ4)	
Contact plating	Cu/Au 0.6	
Knurled nut	Zinc die cast (ZnAlCu)	
Knurled nut (surface)	Zn/CuNi	
Sealing ring	Viton	

Derating curve (DIN IEC 512 part 2: 5/94)

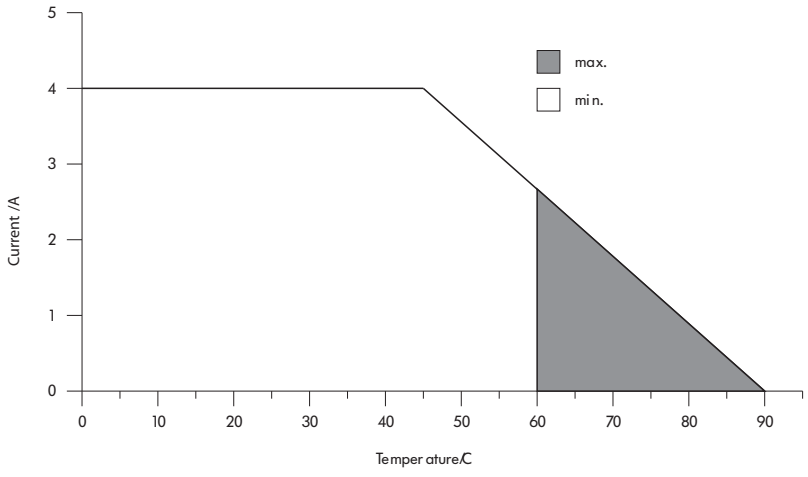

Torque Wrench M8 and M12

Assembly kit

Description	Torque range	Material	Color	Standards/ specifications	Item No.	Pack. Unit
Torque Wrench M8 and M12	0.4 ... 1 Nm ±6 % (adjustable)	**Handle:** Polypropylene (PP) for hard zone, thermoplastic elastomers (TPE) for soft zone **Allen key:** Polyamide (PA), fiber-glass-reinforced; chromium-vanadium-molybdenum steel (CrMoV) (1.2381) **Adjustment tools:** Cellulose acetate; chromium-vanadium-molybdenum steel (CrMoV) (1.2381)	black	EN ISO 6789; BS EN 26789; ASME B107.14.M	**206-701**	1

Assembly kit for 756 Series IP67 cable assemblies and pluggable connectors with hex nut, consists of:

- Tool kit
- Torque screwdriver with adjustable torque (window scale)
- Adjustment tool for changing the torque
- Socket wrench SW9 (for M8 cable assemblies)
- Socket wrench SW13 (for M12 cable assemblies)

A torque specification of 0.6 Nm for M8 connectors and 1.0 Nm for M12 connectors is required for 756 Series cables and connectors.

Bluetooth® Adapter

Bluetooth® Adapter in Connection with 750 Series
The Bluetooth® Adapter wirelessly connects a notebook computer with Bluetooth® functionality to the service interface of the buscoupler/controller. It also provides an active connection to a programmable fieldbus controller. As a cable substitute, the Bluetooth® Adapter allows communication between two fieldbus controllers, as well as between fieldbus couplers/controllers via WAGO software tools (e.g., WAGO-I/O-CHECK, WAGO-I/O-PRO). Configurable coexistence properties ensure trouble-free operation in the presence of other radio systems.

Bluetooth® Adapter in Connection with 857 Series
The Bluetooth® Adapter wirelessly connects a notebook computer with Bluetooth® functionality to the service interface of a configurable 857 Series JUMPFLEX® Module.
As a cable substitute, the Bluetooth® Adapter allows communication between JUMPFLEX® Modules and WAGO software tool (WAGOframe) or configuration APP for Android-based end devices.

If required, adapter configuration may be performed via AT commands. The adapter is supplied via both service interface and power supply of coupler/controller or JUMPFLEX® module.

Description	Item No.	Pack. Unit
***Bluetooth*® Adapter**	**750-921**	1

Approvals

Conformity marking	CE
Bluetooth	Bluetooth® approval

Technical Data

Data transfer rate	9600 ... 115000 bps
Frequency range	2.4 ... 2.4835 GHz (ISM band)
Type of communication	Point-to-point connection
Profiles supported	Serial Port Profile (SPP)
Version	2.1
Radio class	Class 2
RF output power	max. +4 dBm (class 2)
RF input sensitivity	typ. -82 dBm
Antenna	integrated
Ports	4-pole service connectors
Configuration	AT commands (e.g. via Hyper Terminal)
Function	Master or Slave
LED	Operating status
Operating temperature	-20 °C ... +60 °C
Current consumption (internal)	60 mA
Security authentification	PIN code or configurable access list
Security encryption	128-bit encryption
Dimensions (mm) W x H x L	15 x 50 x 19
Weight	7 g
Coexistence	Frequency Hopping Spread Spectrum (FHSS), Adaptive Frequency Hopping (AFH), Adaptive transmission power with configurable upper limit, configurable channel blacklist, supports coexistence optimized inquiry (transmission time ≤ 0.1 s; transmission cycle ≥ 2.9 s)

WAGO Communication Cable

The WAGO Communication Cable provides a simple option for communication with WAGO software tools (WAGO-I/O-CHECK, WAGO-I/O-PRO, ...).

Notice: The communication cable shall not be connected or removed when energized.

The WAGO USB Communication Cable connects a PC (notebook) to either the service interface of the 857 Series Signal Conditioners and Relay Modules (JUMPFLEX), or to WAGO-I/O-SYSTEM buscouplers/controllers.

Notice:
Using the WAGO 759-923 USB Communication Cable in combination with select programmable fieldbus controllers requires the specific firmware versions

Description	Item No.	Pack. Unit
Communication cable (used to register or remove the end extension module)	**750-920**	10

Technical Data

Ports	4-pole service connectors
Length	2.5 m
Operating temperature	0°C ... +55°C
Degree of protection	IP20
Weight	77.9 g
Connector dimensions (WxHxD)	15 x 50 x 19 mm

Description	Item No.	Pack. Unit
WAGO USB Communication Cable, length 2.5 m	**750-923**	1
WAGO USB Communication Cable, length 5 m	**750-923/000-001**	1

Technical Data

USB specification	2.0 compatible/full-speed device
Operating system	Microsoft® Windows® 2000;
	Microsoft® Windows® XP Professional;
	Microsoft® Windows® Vista®;
	Microsoft® Windows® 7
Operating temperature	-25 °C ... +70 °C
Interface USB	Type A/m
Length	2.5 m (750-923)
	5 m (750-923/000-001)
Connector dimensions (WxHxD)	15 x 50 x 19
Test voltage	2.5 kV, 50 Hz, 1 min.
EMC immunity of interference	acc. to EN 61000-4-3, EN 61000-4-6
EMC emission of interference	acc. to EN 55022

Approvals

Conformity marking	CE

PROFIBUS Fieldbus Connector

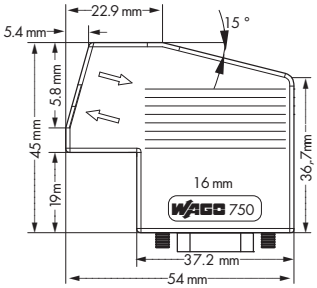

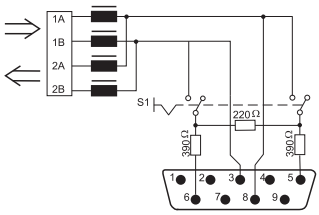

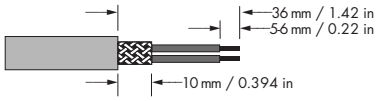

The fieldbus connector links a PROFIBUS device to a PROFIBUS line.

The fieldbus connector has the following features:
- 2 horizontal cable entries. One input and one output.
- Fast and maintenance-free CAGE CLAMP® connection, can be held in the open position with the help of an actuation slide mechanism.
- Externally operable switch to activate and/or deactivate the network terminating resistor.

For the first and last station on the bus, the switch must be set to “ON” (terminating resistor activated). Switch setting to “OFF” for the intermediate stations on the bus (terminating resistor deactivated).

Description	Item No.	Pack. Unit
Bus connector with D-Sub male connector; 9 poles	**750-960**	1

Accessories	Item No.	Pack. Unit
Operating tool, with partially insulated shaft, Type 1, blade (2.5 x 0.4) mm	**210-719**	50
Operating tool, with partially insulated shaft, Type 2, blade (3.5 x 0.5) mm	**210-720**	1
Operating tool for strain relief Phillips screwdriver (PH 0)		
Test pin, 1 mm / 0.039 in Test wire for soldering	**735-500**	1
Marking possibilities Miniature WSB Quick marking system or WMB Multi marking system		

Approvals

Marine applications	ABS, BV, DNV, GL, KR, LR, NKK, PRS, RINA
UL 508	
ANSI/ISA 12.12.01	Class I, Div. 2, Grp. ABCD, T4
TÜV 07 ATEX 554086 X	I M2 Ex d I Mb, II 3 G Ex nA IIC T4 Gc, II 3 D Ex tc IIIC T135°C Dc
IECEx TUN 09.0001 X	Ex d I Mb, Ex nA IIC T4 Gc, Ex tc IIIC T135°C Dc

Technical Data

Double cable input	min. Ø 4.5 mm/0.177 in / max. Ø 9.5 mm/0.374 in
Data transmission rate	corresponding to PROFIBUS specification up to 12 Mbits/s
Power supply	4.75 V ... 5.25 V DC
Max. current consumption (internal)	5 mA
Fixing screw	UNC- 2 A 4-40
Max. tightening torque	0.4 Nm
Housing material	PA66-105-V2
Housing color	light gray
Degree of protection	IP20
Ambient operating temperature	0°C ... +60°C
Storage temperature	-25 °C ... +85 °C
Relative air humidity (no condensation)	95 %
Wire connection	CAGE CLAMP® terminal strips with locking slide (218 Series)
Cross sections	0.08 mm² ... 0.5 mm² / AWG 28 ... 20 sep. connection 0.75 mm² / AWG 18
	possible
Stripped length	see graphic

PROFIBUS Fieldbus Connector

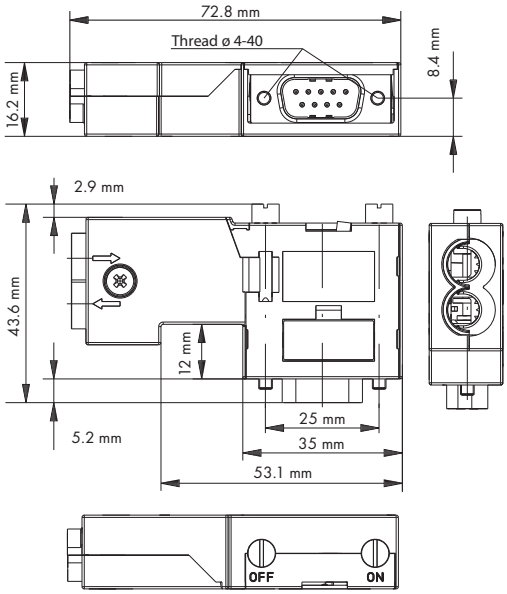

The fieldbus connector links a PROFIBUS device to a PROFIBUS line.

The fieldbus connector has the following features:

- Compact design. It is particularly well-suited for the connection to an S7 PLC.
- No losable parts.
- 2 horizontal cable entries. One input and one output.
- Fast and maintenance-free CAGE CLAMP® connection, can be held in the open position with the help of an actuation slide mechanism.
- Externally operable switch to activate and/or deactivate the network terminating resistor.

For the first and last station on the bus, the switch must be set to "ON" (terminating resistor activated, outgoing bus line disconnected). Switch setting to "OFF" for the intermediate stations on the bus (terminating resistor deactivated).

Description	Item No.	Pack. Unit
Bus connector with D-Sub male connector; 9 poles	**750-971**	1

Accessories	Item No.	Pack. Unit
Operating tool, with partially insulated shaft, Type 1, blade (2.5 x 0.4) mm	**210-719**	50
Test pin, 1 mm / 0.039 in Test wire for soldering Markers	**735-500**	1

Technical Data	
Double cable input	Ø 8.5 mm
Data transmission rate	corresponding to PROFIBUS specification up to 12 Mbits/s
Power supply	4.75 V ... 5.25 V DC
Max. current consumption (internal)	5 mA
Fixing screw	UNC- 2 A 4-40
Max. tightening torque	0.4 Nm
Housing material	PC-V0
Housing color	light gray
Degree of protection	IP20
Ambient operating temperature	0°C ... +60°C
Storage temperature	-25 °C ... +85 °C
Relative air humidity (no condensation)	95 %
Wire connection	CAGE CLAMP® terminal strips with locking slide (218 Series)
Cross sections	0.08 mm² ... 0.5 mm² / AWG 28 ... 20 sep. connection 0.75 mm² / AWG 18 possible
Stripped length	see graphic

PROFIBUS Fieldbus Connector

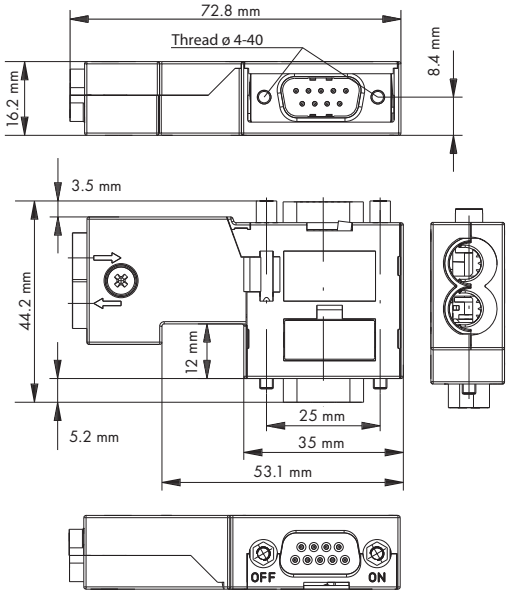

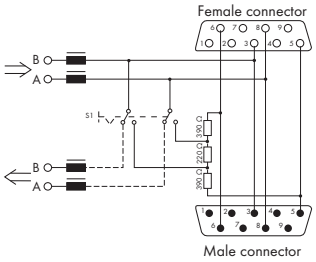

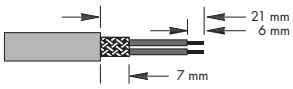

The fieldbus connector links a PROFIBUS device to a PROFIBUS line.

The fieldbus connector has the following features:
- Compact design. It is particularly well-suited for the connection to an S7 PLC.
- No losable parts.
- PG interface
- 2 horizontal cable entries. One input and one output.
- Fast and maintenance-free CAGE CLAMP® connection, can be held in the open position with the help of an actuation slide mechanism.
- Externally operable switch to activate and/or deactivate the network terminating resistor.

For the first and last station on the bus, the switch must be set to "ON" (terminating resistor activated, outgoing bus line disconnected). Switch setting to "OFF" for the intermediate stations on the bus (terminating resistor deactivated).

Description	Item No.	Pack. Unit
Bus connector with D-Sub male and female connectors; 9 poles	**750-972**	1

Accessories	Item No.	Pack. Unit
Operating tool, with partially insulated shaft, Type 1, blade (2.5 x 0.4) mm	**210-719**	50
Test pin, 1 mm / 0.039 in Test wire for soldering Markers	**735-500**	1

Technical Data	
Double cable input	Ø 8.5 mm
Data transmission rate	corresponding to PROFIBUS specification up to 12 Mbits/s
Power supply	4.75 V ... 5.25 V DC
Max. current consumption (internal)	5 mA
Fixing screw	UNC- 2 A 4-40
Max. tightening torque	0.4 Nm
Housing material	PC-V0
Housing color	light gray
Degree of protection	IP20
Ambient operating temperature	0°C ... +60°C
Storage temperature	-25 °C ... +85 °C
Relative air humidity (no condensation)	95 %
Wire connection	CAGE CLAMP® terminal strips with locking slide (218 Series)
Cross sections	0.08 mm² ... 0.5 mm² / AWG 28 ... 20 sep. connection 0.75 mm² / AWG 18 possible
Stripped length	see graphic

ETHERNET RJ-45 Connector, IP20

ETHERNET 10/100 Mbits/s; for field assembly

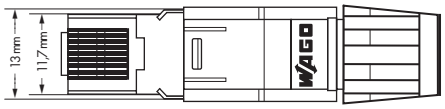

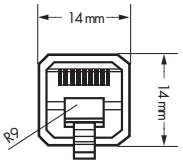

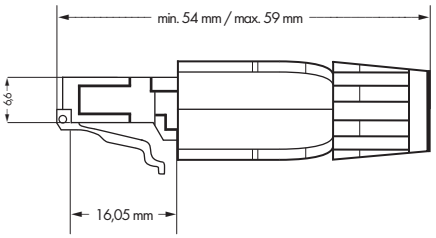

Pin assignment TIA-568A

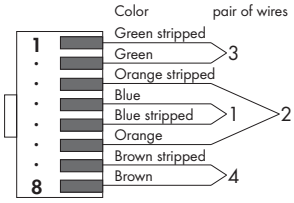

Versatile RJ-45 connector for industrial, office and building wiring.

The compact RJ-45 uses IDC technology for easy field assembly – connection is made without tools.
The connector is compliant with all required standards. Large conductor cross sections can also be connected.
The connector satisfies Category 5e.

Description	Item No.	Pack. Unit
ETHERNET RJ-45 connector, IP20	**750-975**	1

Technical Data

General Specifications	
No. of Poles	8
Contact material	Bronze (CuSn6)
Contact plating	> 1.2 µm gold over 1.2 µm nickel
Insulation material	Connector, polycarbonate (UL-94-V0)
Housing material	Plastic, gray, (UL94-V0)
Mating cycles	min. > 1000
Wire connection	IDC (Insulation Displacement Contact), acc. to 60352-4
IDC surface treatment	Tin-plated, approx. 5 µm
Cross sections	solid: 0.13 mm² ... 0.24 mm² / AWG 26/1 ... 23/1 stranded: 0.14 mm² ... 0.36 mm² / AWG 26/7 ... 22/7
Admissible insulation Ø	≤ 1.6 mm
Cable jacket Ø	4.5 mm ... 8.0 mm
Wire strain relief	With plastic ribs
Cable strain relief	> 50N
Shield contacting	Large surface >180° (on cable shield)
Shield material	Brass (CuZn), hot-dip tinned 3 µm
Ambient operating temperature	-20°C ... +70°C
Storage temperature	-40 °C ... +70 °C
Degree of protection	IP20

Technical Data

Electrical Data	
Contact resistance	(wire – IDC) < 1 mΩ; (strand – IDC) < 5 mΩ
Connector shield	< 20 mΩ
Insulation resistance	(100 V) > 500 MΩ
Dielectric strength	(contact-contact) > 1000 V, 1 min.; (shield-contact) > 1500 V, 1 min.
Nominal current	1.75 A / 20 °C
Standards/specifications	- Basic standard: IEC 60603-7 RJ-45 Category 5 - CD ISO/IEC 11801: 2002 - EN 50173: 2002 - EIA/TIA 568A: 2002

Approvals

Marine applications	ABS, BV, DNV, GL, KR, LR, NKK, PRS, RINA
cULus UL 508	

PROFINET RJ-45 Connector, IP20

PROFINET 10/100 Mbits/s; for field assembly

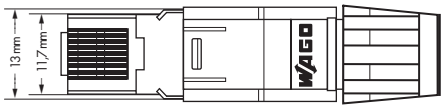

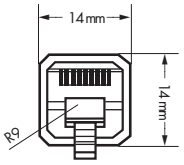

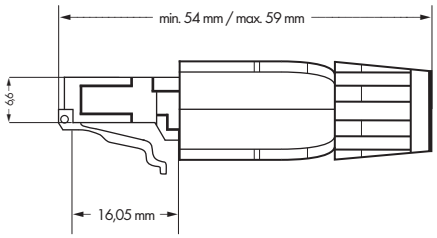

Pin assignment PROFINET

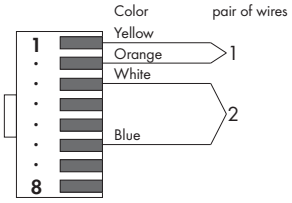

Versatile RJ-45 connector for industrial, office and building wiring

The compact RJ-45 PROFINET connector uses IDC technology for tool-free connections in the field. Both solid and stranded conductors can be connected. The connector is compliant with all required standards and complies with Category 5e.

Description	Item No.	Pack. Unit
PROFINET RJ-45 connector	**750-976**	1

Technical Data

General Specifications	
No. of Poles	8
Contact material	Bronze (CuSn6)
Contact plating	> 1.2 µm gold over 1.2 µm nickel
Insulation material	PC (UL-94-V0)
Housing material	PA (UL94-V0)
Mating cycles	min. > 1000
Wire connection	IDC (Insulation Displacement Contact),
	acc. to 60352-4
IDC surface treatment	Tin-plated, approx. 5 µm
Cross sections	Solid:
	0.24 mm² ... 0.32 mm² /
	AWG 23 ... 22
	Stranded:
	0.26 mm² ... 0.36 mm² /
	AWG 23/7 ... 22/7
Admissible insulation Ø	≤ 1.6 mm
Cable jacket Ø	4.5 mm ... 8.0 mm
Wire strain relief	With plastic ribs
Cable strain relief	> 50N
Shield contacting	Large surface >180° (on cable shield)
Shield material	Brass (CuZn), hot-dip tinned 3 µm
Ambient operating temperature	-20°C ... +70°C
Storage temperature	-40 °C ... +70 °C
Degree of protection	IP20

Technical Data

Electrical Data	
Contact resistance	(wire – IDC) < 1 mΩ;
	(strand – IDC) < 5 mΩ
Connector shield	< 20 mΩ
Insulation resistance	(100V) > 1GΩ
Dielectric strength	(contact-contact) > 1000 V, 1 min. ;
	(shield-contact) > 1500 V, 1 min.
Nominal current	1.75 A / 20 °C
Standards/specifications	- Basic standard:
	IEC 60603-7 RJ-45 Category 5
	- CD ISO/IEC 11801: 2002
	- EN 50173: 2002

Approvals

Marine applications	GL
cULus UL 508	

CANopen Fieldbus Connector

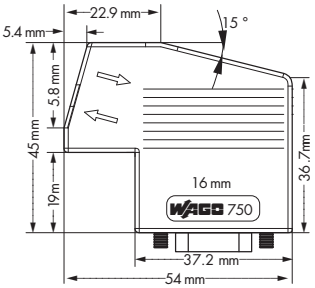

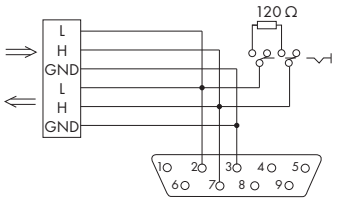

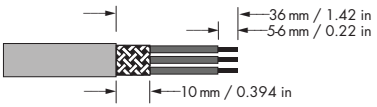

The fieldbus connector links a CANopen device to a CANopen line.

The fieldbus connector has the following features:
- 2 horizontal cable entries. One input and one output.
- Fast and maintenance-free CAGE CLAMP® connection, can be held in the open position with the help of an actuation slide mechanism.
- Externally operable switch to activate and/or deactivate the network terminating resistor.

For the first and last station on the bus, the switch must be set to "ON" (terminating resistor activated). Switch setting to "OFF" for the intermediate stations on the bus (terminating resistor deactivated).

Description	Item No.	Pack. Unit
Bus connector with D-Sub female connector; 9 poles	**750-963**	1

Accessories	Item No.	Pack. Unit
Operating tool, with partially insulated shaft, Type 1, blade (2.5 x 0.4) mm	**210-719**	50
Operating tool, with partially insulated shaft, Type 2, blade (3.5 x 0.5) mm	**210-720**	1
Operating tool for strain relief Phillips screwdriver (PH 0)		
Test pin, 1 mm / 0.039 in Test wire for soldering	**735-500**	1
Marking possibilities Miniature WSB Quick marking system or WMB Multi marking system		

Approvals

Marine applications	ABS, BV, DNV, GL, KR, LR, NKK, PRS, RINA
cULus UL 508	
TÜV 07 ATEX 554086 X	I M2 Ex d I Mb, II 3 G Ex nA IIC T4 Gc, II 3 D Ex tc IIIC T135°C Dc
IECEx TUN 09.0001 X	Ex d I Mb, Ex nA IIC T4 Gc, Ex tc IIIC T135°C Dc

Technical Data

Double cable input	min. Ø 4.5 mm/0.177 in / max. Ø 9.5 mm/0.374 in
Data transmission rate	corresponding to CANopen specification 10 kbaud ... 1 Mbaud
Fixing screw	UNC- 2 A 4-40
Max. tightening torque	0.4 Nm
Housing material	PA66-105-V2
Housing color	light gray
Degree of protection	IP20
Ambient operating temperature	0°C ... +60°C
Storage temperature	-25 °C ... +85 °C
Relative air humidity (no condensation)	95 %
Wire connection	CAGE CLAMP® terminal strips with locking slide (218 Series)
Cross sections	0.08 mm² ... 0.5 mm² / AWG 28 ... 20 sep. connection 0.75 mm² / AWG 18 possible
Stripped length	see graphic

INTERBUS Fieldbus Connector (IN)

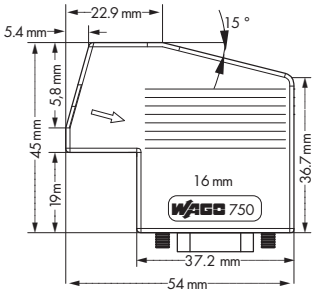

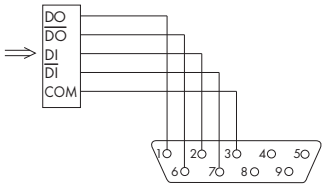

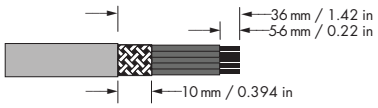

The fieldbus connector links an INTERBUS device to an INTERBUS line.

The fieldbus connector has the following features:
- Fast and maintenance-free CAGE CLAMP® connection, can be held in the open position with the help of an actuation slide mechanism.

Description		Item No.	Pack. Unit
Bus connector with D-Sub female connector; 9 poles		**750-961**	1

Accessories		Item No.	Pack. Unit
Operating tool, with partially insulated shaft, Type 1, blade (2.5 x 0.4) mm		**210-719**	50
Operating tool, with partially insulated shaft, Type 2, blade (3.5 x 0.5) mm		**210-720**	1
Operating tool for strain relief Phillips screwdriver (PH 0)			
Test pin, 1 mm / 0.039 in	Test wire for soldering	**735-500**	1
Marking possibilities Miniature WSB Quick marking system or WMB Multi marking system			

Approvals

UL 508	
ANSI/ISA 12.12.01	Class I, Div. 2, Grp. ABCD, T4
TÜV 07 ATEX 554086 X	I M2 Ex d I Mb, II 3 G Ex nA IIC T4 Gc, II 3 D Ex tc IIIC T135°C Dc
IECEx TUN 09.0001 X	Ex d I Mb, Ex nA IIC T4 Gc, Ex tc IIIC T135°C Dc

Technical Data

Easy wire connection	min Ø 4.5 mm/0.177 in / max Ø 9.5 mm/0.374 in
Data transmission rate	corresponding to INTERBUS specification 2 Mbaud
Fixing screw	UNC- 2 A 4-40
Max. tightening torque	0.4 Nm
Housing material	PA66-105-V2
Housing color	light gray
Degree of protection	IP20
Ambient operating temperature	0°C ... +60°C
Storage temperature	-25 °C ... +85 °C
Relative air humidity (no condensation)	95 %
Wire connection	CAGE CLAMP® terminal strips with locking slide (218 Series)
Cross sections	0.08 mm² ... 0.5 mm² / AWG 28 ... 20 sep. connection 0.75 mm² / AWG 18 possible
Stripped length	see graphic

INTERBUS Fieldbus Connector (OUT)

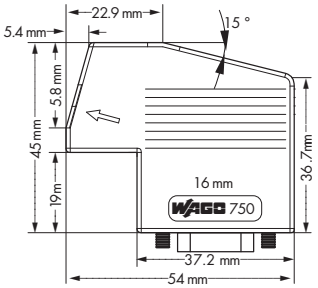

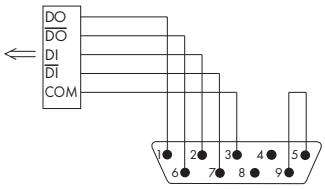

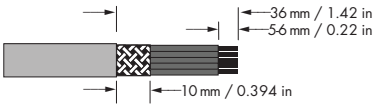

The fieldbus connector links an INTERBUS device to an INTERBUS line.

The fieldbus connector has the following features:
- Fast and maintenance-free CAGE CLAMP® connection, can be held in the open position with the help of an actuation slide mechanism.

Description	Item No.	Pack. Unit
Bus connector with D-Sub male connector; 9 poles	**750-962**	1

Accessories	Item No.	Pack. Unit
Operating tool, with partially insulated shaft, Type 1, blade (2.5 x 0.4) mm	**210-719**	50
Operating tool, with partially insulated shaft, Type 2, blade (3.5 x 0.5) mm	**210-720**	1
Operating tool for strain relief Phillips screwdriver (PH 0)		
Test pin, 1 mm / 0.039 in Test wire for soldering	**735-500**	1
Marking possibilities Miniature WSB Quick marking system or WMB Multi marking system		

Approvals

UL 508	
ANSI/ISA 12.12.01	Class I, Div. 2, Grp. ABCD, T4
TÜV 07 ATEX 554086 X	I M2 Ex d I Mb, II 3 G Ex nA IIC T4 Gc, II 3 D Ex tc IIIC T135°C Dc
IECEx TUN 09.0001 X	Ex d I Mb, Ex nA IIC T4 Gc, Ex tc IIIC T135°C Dc

Technical Data

Easy wire connection	min Ø 4.5 mm/0.177 in / max Ø 9.5 mm/0.374 in
Data transmission rate	corresponding to INTERBUS specification 2 Mbaud
Fixing screw	UNC- 2 A 4-40
Max. tightening torque	0.4 Nm
Housing material	PA66-105-V2
Housing color	light gray
Degree of protection	IP20
Ambient operating temperature	0°C ... +60°C
Storage temperature	-25 °C ... +85 °C
Relative air humidity (no condensation)	95 %
Wire connection	CAGE CLAMP® terminal strips with locking slide (218 Series)
Cross sections	0.08 mm² ... 0.5 mm² / AWG 28 ... 20 sep. connection 0.75 mm² / AWG 18 possible
Stripped length	see graphic

CC-Link Fieldbus Connector

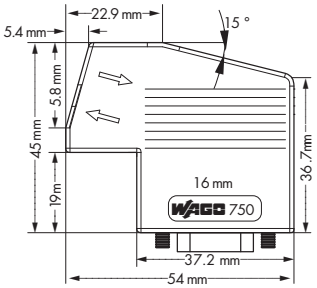

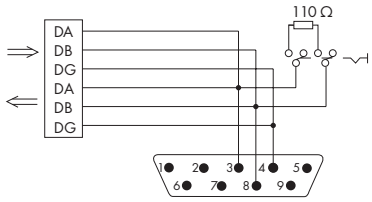

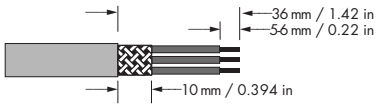

The fieldbus connector connects a CC-Link device to a CC-Link line.
The fieldbus connector has the following features:

- 2 horizontal cable entries. One input and one output.
- Fast and maintenance-free CAGE CLAMP® connection, can be held in the open position with the help of an actuation slide mechanism.
- Externally operable switch to activate and/or deactivate the termination resistor.

For the first and last station on the bus, the switch must be set to "ON" (terminating resistor activated). Switch setting to "OFF" for the intermediate stations on the bus (terminating resistor deactivated).

Description	Item No.	Pack. Unit
Bus connector with D-Sub male connector; 9 poles	**750-965**	1

Accessories	Item No.	Pack. Unit
Operating tool, with partially insulated shaft, Type 1, blade (2.5 x 0.4) mm	**210-719**	50
Operating tool, with partially insulated shaft, Type 2, blade (3.5 x 0.5) mm	**210-720**	1
Operating tool for strain relief Phillips screwdriver (PH 0)		
Test pin, 1 mm / 0.039 in Test wire for soldering	**735-500**	1
Marking possibilities Miniature WSB Quick marking system or WMB Multi marking system		

Approvals

UL 508

Technical Data

Double cable input	min. Ø 4.5 mm/0.177 in / max. Ø 9.5 mm/0.374 in
Data transmission rate	corresponding to CC-Link specification
Fixing screw	UNC- 2 A 4-40
Max. tightening torque	0.4 Nm
Housing material	PA66-105-V2
Housing color	light gray
Degree of protection	IP20
Ambient operating temperature	0 °C ... +60 °C
Storage temperature	-25 °C ... +85 °C
Relative air humidity (no condensation)	95 %
Wire connection	CAGE CLAMP® terminal strips with locking slide (218 Series)
Cross sections	0.08 mm² ... 0.5 mm² / AWG 28 ... 20 sep. connection 0.75 mm² / AWG 18 possible
Stripped length	see graphic

The WAGO-I/O-SYSTEM 750/753
in IP65 Enclosures

1 Stainless steel
2 Sheet steel
3 Die-cast aluminum
4 Polyester
5 Sheet steel with cable entry plates

Enclosures for the WAGO-I/O-SYSTEM

The growing importance of industrial fieldbus systems in the field of process engineering, for example the chemical industry or food industry, demands enclosures that protect both the system equipment and the products.
WAGO offers enclosures that allow the use of the WAGO-I/O-SYSTEM 750 in installations where severe conditions exist.

The IP65 enclosures come equipped with the WAGO-I/O-SYSTEM 750, meeting these requirements. They have the appropriate number of cable grips with metric or cable entry plates. Each enclosure is available in four different sizes.
Delivery time and other types of enclosures are available upon request!

Stainless Steel IP65 Enclosures

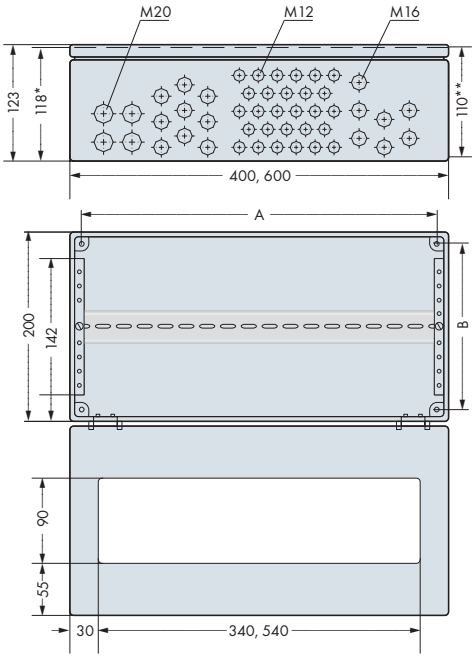

Dimensions in mm
* internal dimension
** from upper-edge of DIN 35 rail

Accessories: Pole mounting

Description	Item No.	Pack. Unit	M 12	M 16	M 20	Mounting dimension A	B	Width	Height	Length	No. of I/O modules
Stainl. steel	**850-804**	1	28	16	4	376	176	400	123	200	≤ 24
Stainl. steel [1]	**850-804/000-001**	1	32	13	2	376	176	400	123	200	≤ 24
Stainl. steel	**850-805**	1	67	19	4	576	176	600	123	200	≤ 40

Description		Item No.	Pack. Unit
Pole mounting	2 molded rails, 600 mm long and 4 clamping profiles, sheet steel, galvanized; 2 tightening straps, stainless steel 1.4301; 4 angle brackets (pole diameter: 40 - 190 mm; pole dimensions: 50 mm x 50 mm to 150 mm x 150 mm)	**850-903**	1

Included:

- Stainless steel enclosure 1.4301 streak finish
- With hinged cover 90°, (850-804/000-001: 180°), with cellular rubber gasket made of natural rubber, 2 to 3 quick disconnects
- Hinges made of chromed GdZn (Gadulinium Zinc) with M5 countersunk screws
- Macrolon inspection glass
- Metric cable grips (brass, nickel-plated), **incl. filler plugs**;
  M12 cable grip, cable diameter 3–6mm;
  M16 cable grip, cable diameter 5–9mm;
  M20 cable grip, cable diameter 9–13mm
- 1 DIN 35/7.5 rail

The "number of I/O modules" also takes fieldbus couplers and bus end modules into account.
This applies to 12mm-wide I/O modules. I/O modules with a width of 24mm count as two I/O modules.

[1] Note:
Arrangement of the cable grips differs from standard enclosures

Steel IP65 Enclosures

Fig. 850-817/002-000 sheet steel, type 4

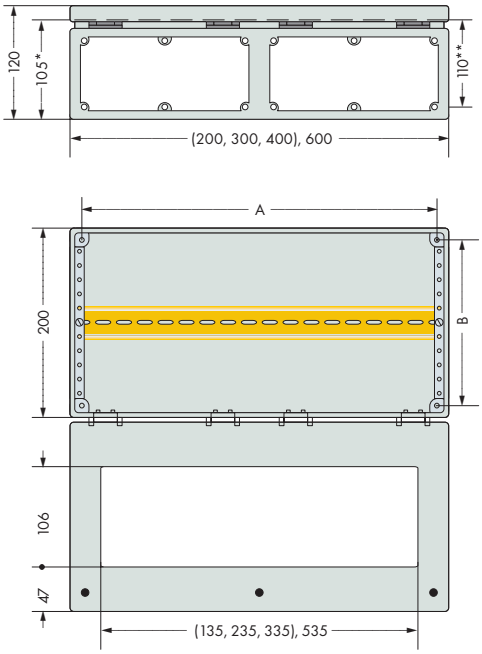

Dimensions in mm
* internal dimension
** from upper-edge of DIN 35 rail

Accessories: Wall mounting system

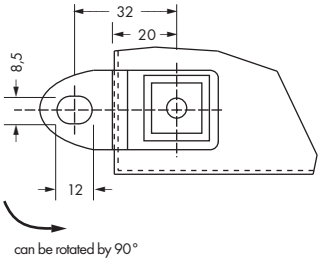

can be rotated by 90°

Description	Item No.	Pack. Unit	Mounting dimension A	B	Width	Height	Length	No. of I/O modules	Accessories Flange plates (available separately)
Sheet steel, type 1	**850-814/002-000**	1	160	160	200	120	200	≤ 8	1 x F200 or F200-1 or F200-2 or F204
Sheet steel, type 2	**850-815/002-000**	1	260	160	300	120	200	≤ 16	1 x F300 or F300-1 or F300-2 or F304
Sheet steel, type 3	**850-816/002-000**	1	360	160	400	120	200	≤ 24	2 x F200 or 1 x F200-1 + 1 x F200-2 or 2 x F204
Sheet steel, type 4	**850-817/002-000**	1	560	160	600	120	200	≤ 40	2 x F300 or 1 x F300-1 + 1 x F300-2 or 2 x F304

Description	Item No.	Pack. Unit
Wall mounting system, set with 4 mounting angles	**850-904**	1

Included:

- Powder-coated, sheet steel enclosure
- Box with narrow beveled edge, sturdy gutter profile
- With hinged cover 180° (PA), with foam PU seal, 2 to 3 quick disconnects
- Quick-release fasteners in plastic bushes
- Mounting holes (incl. sealing plugs)
- Large Macrolon inspection glass
- Removable, yellow-chromized interior profiles
- Galvanized carrier rail (contact with enclosure) DIN 35/7.5, adjustable in 12.5mm/0.49in. spacing
- Grounding lug for cover and flanges with quick-release ribbon cable connectors
- Light gray, RAL 7035

Accessories:
Fitted and unfitted flange plates, wall mounting

The "number of I/O modules" also takes fieldbus couplers and bus end modules into account.
This applies to 12mm-wide I/O modules. I/O modules with a width of 24mm count as two I/O modules.

Accessories: Flange Plates and Cable Entry Plates

Flange plates, blind, incl. fixing accessories

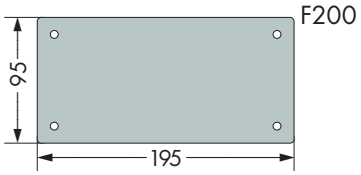

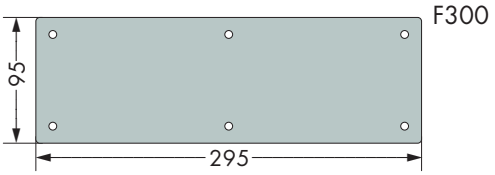

Description	Item No.	Pack. Unit
F200, Flange plate, blind	850-818/002-000	1
F300, Flange plate, blind	850-819/002-000	1

Flange plates with and without cable grips/cable entry plate, incl. fixing accessories

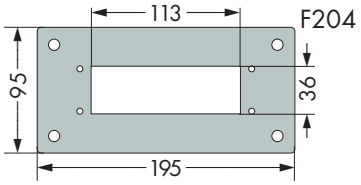

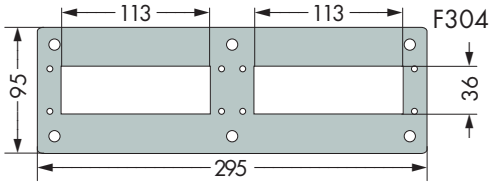

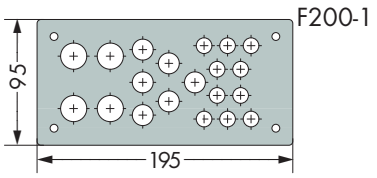

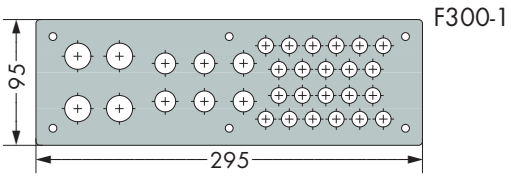

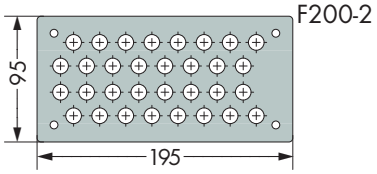

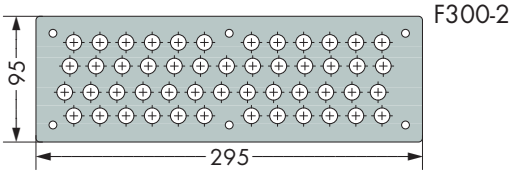

Description	Item No.	Pack. Unit
F204, flange plate without cable entry plate (1 cut-out)	850-818/002-005	1
F304, flange plate without cable entry plate (2 cut-outs)	850-819/002-005	1
Cable entry plate KDP 22 for flange plates F204 + F304 (16 x size 1, 4 x size 2, 2 x size 3)	850-820/000-001	1
Cable entry plate KDP 29 for flange plates F204 + F304 (29 x size 1)	850-820/000-002	1
F200-1, flange plate without cable grips (bore holes: 4 x M20, 6 x M16, 10 x M12)	850-818/002-001	1
F200-1, flange plate with cable grips (cable grips: 4 x M20, 6 x M16, 10 x M12)	850-818/002-002	1
F200-2, flange plate without cable grips (bore holes: 32 x M12)	850-818/002-003	1
F200-2, flange plate with cable grips (cable grips: 32 x M12)	850-818/002-004	1
F300-1, flange plate without cable grips (bore holes: 4 x M20, 6 x M16, 22 x M12)	850-819/002-001	1
F300-1, flange plate with cable grips (cable grips: 4 x M20, 6 x M16, 22 x M12)	850-819/002-002	1
F300-2, flange plate without cable grips (bore holes: 50 x M12)	850-819/002-003	1
F300-2, flange plate with cable grips (cable grips: 50 x M12)	850-819/002-004	1

F200-1 with bore holes and cable grip

Brass, nickel-plated, incl. filler plugs
M12 cable grip: cable ⌀ 3 ... 6 mm
M16 cable grip: cable ⌀ 5 ... 9 mm
M20 cable grip: cable ⌀ 9 ... 13 mm

F204 with KDF 22 (tool-less cable entry technique in IP65)

Cable entry plate, polyamide
Size 1: Cable ⌀ 3.0 ... 6.5 mm
Size 2: Cable ⌀ 5.0 ... 9.2 mm
Size 3: Cable ⌀ 8.0 ... 12.5 mm

Aluminum IP65 Enclosures

Fig. Enclosure type in RAL 7035

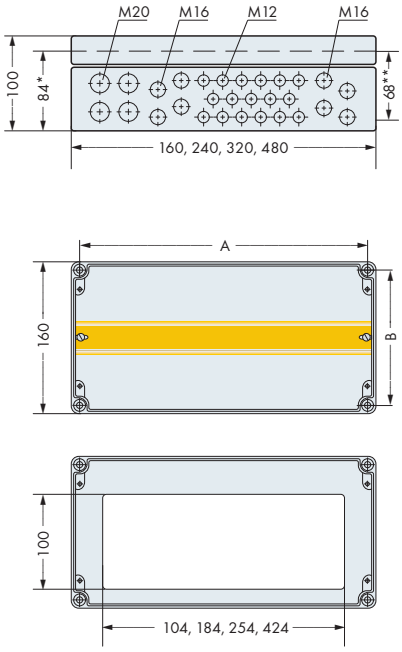

Dimensions in mm
* internal dimension
** from upper-edge of DIN 35 rail

Accessories: Pole mounting

Description	Item No.	Pack. Unit	M 12	M 16	M 20	Mounting dimension A	B	Width	Height	Length	No. of I/O modules
Aluminium	**850-825**	1	9		4	142	142	160	100	160	≤ 4
Aluminium	**850-826**	1	14	4	4	222	142	240	100	160	≤ 11
Aluminium [1]	**850-826/002-000**	1	14	4	4	222	142	240	100	160	≤ 11
Aluminium	**850-827**	1	17	8	4	302	142	320	100	160	≤ 18
Aluminium [1]	**850-827/002-000**	1	17	8	4	302	142	320	100	160	≤ 18
Aluminium	**850-828**	1	35	10	4	462	142	480	100	160	≤ 31
Aluminium [1]	**850-828/002-000**	1	35	10	4	462	142	480	100	160	≤ 31

Description		Item No.	Pack. Unit
Pole mounting	2 molded rails, 600 mm long and 4 clamping profiles, sheet steel, galvanized; 2 tightening straps, stainless steel 1.4301; 4 angle brackets (pole diameter: 40 - 190 mm; pole dimensions: 50 mm x 50 mm to 150 mm x 150 mm)	**850-903**	1

Included:

- Aluminum enclosure, G AL Si 12 alloy / DIN 1725
- Stainless steel cover screws, captive
- Inspection glass, incl. attachment panel for customer marking (marking not included in scope of supply)
- Mounting holes (4 mounting channels located outside the sealed enclosure)
- Metric cable grips (brass, nickel-plated), **incl. filler plugs;**
  M12 cable grip, cable diameter 3–6mm;
  M16 cable grip, cable diameter 5–9mm;
  M20 cable grip, cable diameter 9–13mm
- 1 DIN 35/7.5 rail
- Tongue and groove system, seal with groove in enclosure cover
- Oil and petroleum-resistant neoprene round chord seal
- Grounding link in enclosure
- Pebble gray, RAL 7032

The "number of I/O modules" also takes fieldbus couplers and bus end modules into account.
This applies to 12mm-wide I/O modules. I/O modules with a width of 24mm count as two I/O modules.

1) Note:
Enclosure type in RAL 7035

Polyester IP65 Enclosures

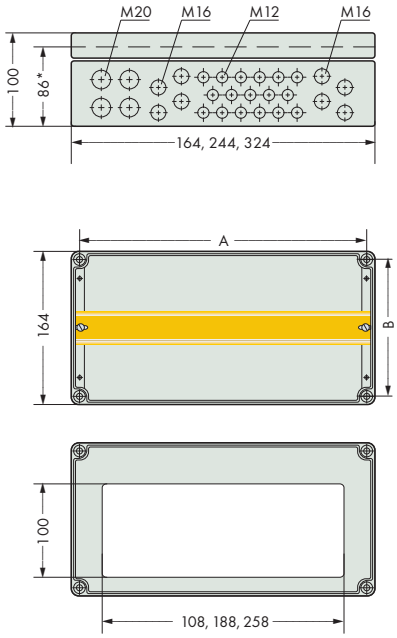

Dimensions in mm
* internal dimension
** from upper-edge of DIN 35 rail

Accessories: Pole mounting

Description	Item No.	Pack. Unit	M 12	M 16	M 20	Mounting dimension A	B	Width	Height	Length	No. of I/O modules
Polyester	**850-834**	1	9		4	142	142	164	100	164	≤ 4
Polyester	**850-835**	1	14	4	4	222	142	244	100	164	≤ 11
Polyester	**850-836**	1	17	8	4	302	142	324	100	164	≤ 18

Description		Item No.	Pack. Unit
Pole mounting	2 molded rails, 600 mm long and 4 clamping profiles, sheet steel, galvanized;	**850-903**	1
	2 tightening straps, stainless steel 1.4301;		
	4 angle brackets (pole diameter: 40 - 190 mm; pole dimensions: 50 mm x 50 mm to 150 mm x 150 mm)		

Included:

- Polyester enclosure, glass fiber-reinforced, halogen-free, as V0 version (self-extinguishing)
- Polyamide cover screws, captive
- Inspection glass, incl. attachment panel for customer marking (marking not included in scope of supply)
- Mounting holes (4 mounting channels located outside the sealed enclosure)
- Metric cable grips (polyamide PA 6), **incl. filler plugs;**
  M12 cable grip, 3–6 mm cable diameter ;
  M16 cable grip, 5–9 mm cable diameter;
  M20 cable grip, 9–13 mm cable diameter
- 1 x DIN 35/7.5 rail
- Oil and petroleum-resistant neoprene round chord seal
- Pebble gray, RAL 7032

The "number of I/O modules" also takes fieldbus couplers and bus end modules into account.
This applies to 12mm-wide I/O modules. I/O modules with a width of 24mm count as two I/O modules.

DALI Multi-Sensors

Ceiling Installation

Box Installation

Surface Mounting

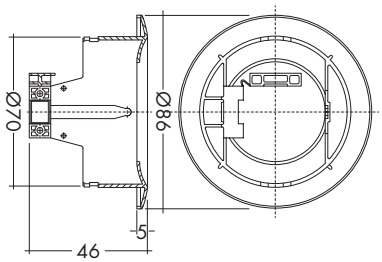

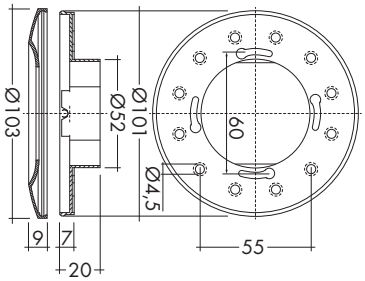

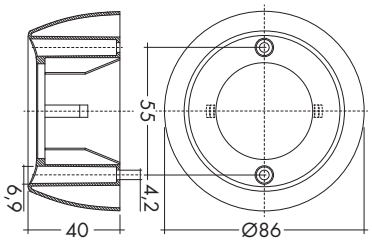

The WAGO DALI MSensor 02 is used with WAGO DALI Modules (753-647 DALI Multi-Master Module or 750-641DALI/DSI Module).
It has been designed for the following principal applications:
- Individual offices
- Open-plan offices
- Training/presentation rooms
- Corridors, passageways and garages

The Multi-Sensor features both motion and light detection. As an option, the sensor can be operated via remote control (from Tridonic). The sensor enables both motion detection and daylight-dependent lighting control; both of which can also be deactivated.
Addressing is performed via rotary switch or WAGO DALI Configurator.
Parameters can be adjusted individually via WAGO DALI Configurator.
Power supply is provided via DALI line.
The number of sensors, which can be operated on a DALI line, depends on the total power consumption of the specific devices and address range for the actuators and sensors. Due to the capacity of the DALI bus, a maximum of 16 DALI sensor couplers must be operated on the DALI Multi-Master Module (753-647).

Installation notes:

- The DALI MSensor 02 is supplied directly via DALI line.
- DALI is not SELV (Safety Extra Low Voltage). The installation instructions for mains voltage therefore apply.
- The detection range of the sensor must be within the lighting area of the controlled luminaires.
- The detection ranges of the sensors must not overlap as this may influence the lighting control.
- When installed at a height other than the recommended installation height (2.5 m), the presence and light sensor might show different characteristics. When mounted at a higher level, its sensitivity is reduced. If mounted at a lower level, its range is diminished.
- Heaters, fans, printers and copiers located in the detection range may cause incorrect presence detection.

Description	**DALI MSensor 02 5DPI 41rc (Ceiling Installation)**	**DALI MSensor 02 5DPI 41w (Box Installation)**	**DALI MSensor 02 5DPI 41rs (Surface Mounting)**
Item Number	**2851-8301**	**2851-8302**	**2851-8303**
Technical Data			
Ø of detection range, mounted at a height of 2.5 m	5 m		
Extension of the detection range	2 m (if mounted at a height of 2.5 m and swivelled through 15°)	2 m (if mounted at a height of 2.5 m and swivelled through 15°)	-
Swivel design	yes	yes	no
Swivel range	± 15°	± 15°	0°
Detection angle	360°		
Light measurement at the sensor head	10 ... 650 lx (The measured value at the sensor head corresponds to approx. 15 to 2,000 lux on the surface measured.)		
Remote control range	5 m		

Technical Data

Power supply	via DALI line
Current consumption	6 mA from DALI line
Operating temperature	0 °C ... +50 °C
Storage temperature	-25 °C ... +55 °C
Degree of protection	IP20
Wire type and cross-section	Solid or fine-stranded wires ranging from 0.5 mm² to 1.5 mm² (AWG 20–16)

Technical Data

General settings:	
Motion detection	enabled, on/off
Lighting control	enabled
Setpoint, lighting control	150 lx
Power-on setting	no action
Bright-out timeout	10 min.
Bright-out threshold	150 %
Control speed	4
Switch-on value	auto (calculated)
Rotary switch	0, broadcast
Motion detector settings:	
Fade-in time	< 0.7 s
Presence value	regulated
Run-on time	20 min.
Fade time	5.6 s
Absence value	3 %
Switch-off delay	10 min.
Fade-off time	5.6 s
Manual-off	10 min.

Light detection

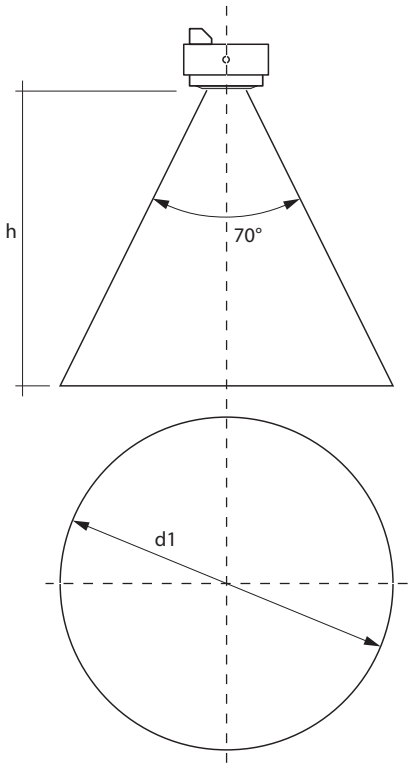

h *	d1	d2
1,7 m	2,4 m	3,4 m
2,0 m	2,8 m	4,0 m
2,3 m	3,2 m	4,6 m
2,5 m	3,5 m	5,0 m
2,7 m	3,8 m	5,4 m
3,0 m	4,2 m	6,0 m
3,5 m	4,9 m	7,0 m
4,0 m	5,6 m	8,0 m

Motion detection

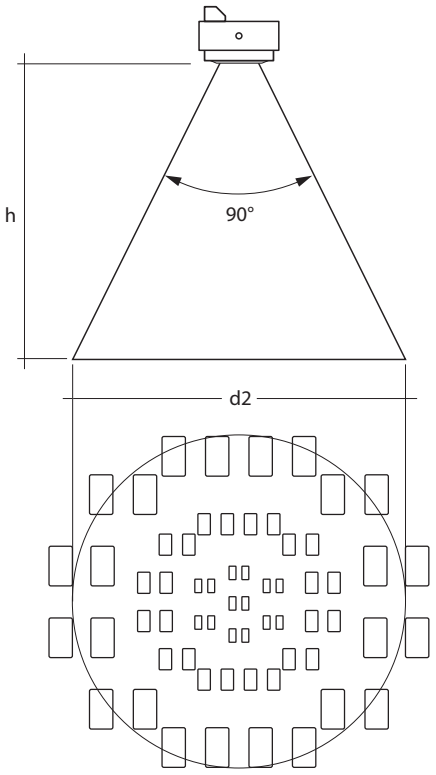

* The recommended maximum room height for office applications is 3 m and for corridor applications 4 m, for example.

Calculation of the diameter:
$d = 2 \times \tan(0.5 \times \alpha) \times h$

WAGO DALI Multi-Sensor Kit

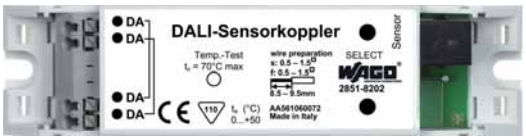

DALI Sensor Coupler

MULTI 3 CI Sensor

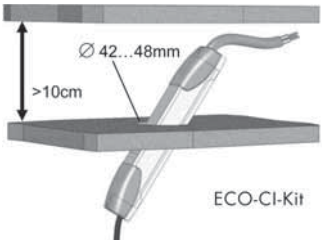

ECO CI Kit

The WAGO DALI Multi-Sensor Kit is paired with the WAGO 753-647 DALI Multi-Master Module and includes the following three components:

- DALI Sensor Coupler (also available individually)
- ECO CI Kit
- MULTI 3 CI Sensor

The DALI Sensor Coupler connects the MULTI 3 CI Sensor to a DALI bus system. For this, the MULTI 3 CI Sensor is connected to the DALI Sensor Coupler via RJ-10 socket. DALI terminals connect the DALI Sensor Coupler to both the DALI network and WAGO DALI Module. The ECO CI Kit contains two covers, which can be used as touch guards and strain relief for cables within the ceiling installation of the DALI Sensor Coupler.
The MULTI 3 CI Sensor has a motion and light sensor, enabling both motion detection and daylight-dependent lighting control. Power supply to the DALI Sensor Coupler is provided via DALI line. The DALI Sensor Coupler transmits measured values from the connected sensor channels as telegrams to the WAGO DALI Module via DALI line. Parameters can be adjusted individually via WAGO DALI Configurator.

The number of sensors, which can be operated on a DALI line, depends on the total power consumption of the specific devices and the address range for the actuators and sensors. Due to the capacity of the DALI bus, a maximum of 16 DALI sensor couplers must be operated on the DALI Multi-Master Module (753-647).

Assembly

Sensor connection

The MULTI 3 CI Sensor is connected to a 4-pole RJ-10 socket (4P4C), which is marked as "Sensor" on the housing cover.
For easy connection, the sensor plug is equipped with a quick-connect latch. Only one MULTI 3 CI Sensor must be connected to sensor coupler.

Ceiling installation

For installation outside of a lighting fixture (e.g., suspended ceiling), the ECO CI Kit must also be attached to both sides of the unit to ensure strain relief and touch protection. The DALI Sensor Coupler can also be installed in lighting fixtures. The installation spaces available in lighting fixtures can be used, as the dimensions correspond to those of an electronic ballast.

Note:

The DALI Sensor Coupler is also available individually, allowing the unit to be combined with other multi-sensor models from Osram.

Description	Item No.	Pack. Unit
WAGO DALI Multi-Sensor Kit	**2851-8201**	1
DALI Sensor Coupler	**2851-8202**	1

Approvals

Conformity mark	CE

Technical Data

DALI Sensor Coupler	
Power supply	via DALI line
Current consumption	5 mA (from the DALI line)
Input signal voltage/current:	according to MULTI 3 CI Sensor
Operating temperature	0 °C ... +50 °C
Connections	Inputs: for MULTI 3 CI Sensor's modular plug 4P4C (RJ-10),
	sensor cable length, max. 5 m
	DALI connection:
	Push-wire connectors, 8.5 – 9.5 mm strip length
Cross sections	0.5 – 1.5 mm² (s + f-st) / AWG 20 – 16
Dimensions (mm) W x H x D	118 x 21 x 30
Weight	35 g
Storage temperature	-25 °C ... +70 °C
Relative humidity (non-condensing)	5 – 93 %
Degree of protection	IP20
ECO CI Kit	
Installation opening diameter	42 – 48 mm
Minimum suspended ceiling distance	25 mm
MULTI 3 CI Sensor	
Maximum total length of signal line (incl. all connections to the control units)	100 m
Dimensions (Diameter x H)	50 x 25 mm
Light sensor detection area	20 – 600 lx (measured on the sensor), opening angle approx. 90°
Recommended installation height	2 – 4 m
Motion detection area	Conical, opening angle approx. 80°, depending on installation height 4 – 8 m

Power Supply

for 753-647 DALI Multi-Master Module

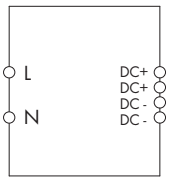

The 787-1007 Primary Switch Mode Power Supply is specially designed to supply the 753-647 DALI Multi-Master Module. The 787-1007 features a 54mm-wide DIN-rail mount enclosure with input voltage range of 85 to 264VAC (120 – 373VAC). The power supply provides an output voltage of 18VDC and a maximum output current of 1100mA – enough to supply up to five parallel modules. The maximum current per DALI line is limited to 200mA in each DALI Multi-Master Module.

- Supplies up to five 753-647 DALI Multi-Master Modules*
- Prepared for class II equipment
- Natural convection cooling when horizontally mounted
- Stage profile, ideal for distribution boards or distribution boxes

Description	Item No.	Pack. Unit
Primary Switch Mode Power Supply, 18 VDC / 1.1A	**787-1007**	1

Technical Data

Input:	
Nominal input voltage Vi nom	100 ... 240 VAC
Input voltage range	85 ... 264 VAC; 120 ... 373 VDC
Frequency	44 ... 66 Hz; 0 Hz
Input current Ii	0.6 A at 110 VAC / 0.4 A at 230 VAC
Inrush current	< 30 A, NTC
Mains failure hold-up time	> 10 ms at 110 VAC / > 80 ms at 230 VAC
Output:	
Nominal output voltage Vo nom	18 VDC
Output current Io	1.1 A at 18 VDC
	max. 0.8 A (18 VDC) in any mounting position
Factory preset	18 VDC
Adjustment accuracy	2 %
Residual ripple	< 150 mV (peak-peak)
Current limitation	1.1 x Io typ.
Overload behavior	Constant current
Operational indication	LED green (Va)
Efficiency / power losses:	
Efficiency	80 % typ.
Power loss P_V	3 W (no load) / 6 W (rated load)
Fuse protection:	
Internal fuse	2 AT
External fuse	Wire breaking 10 A, 16 A, Characteristic B, C
	An external DC fuse is required for the DC input voltage

* **Note:** The 787-1007 Power Supply must be operated in a DALI network with interconnected 753-647 DALI Multi-Master Module. Otherwise the connected DALI devices will be destroyed.

Technical Data

Environmental requirements:	
Ambient operating temperature	-25 °C ... +55 °C
Storage temperature	-25 °C ... +80 °C
Rel. humidity	30 % ... 85 % (no condensation)
Degree of pollution	2 (acc. to EN 50178)
Climatic category	3K3 (acc. to EN 60721)
Safety and protection:	
Enclosure	Plastic, light gray, Flammability class V0 acc. to UL94
Test voltage pri. - sec.	4.2 kV DC
Protection class	Prepared for class II equipment
Degree of protection	IP20 (acc. to EN 60529)
No-load proof	yes
Feedback voltage	max. 20 VDC
Short circuit protection	yes
MTBF	500000 h
Connection and type of mounting:	
Wire connection	Input/Output: WAGO Series 740
Cross sections	Input/Output: 0.08 mm² ... 2.5 mm² / AWG 28 ... 12
Stripped lengths	Input/Output: 6 ... 7 mm / 0.24 ... 0.28 in
Type of mounting	DIN-rail mount (EN 60715)
Dimensions and weight:	
Dimensions (mm) W x H x L	54 x 89 x 59
	Length: 55 mm, from upper-edge of DIN 35 rail
Weight	170 g
Standards and approvals:	
Standards/Specifications	EN 60950 (SELV), EN 61204-3, GL (Environmental Category A, EMC 2), UL 60950**, UL 508** (** pending)

Multi-Port Device Taps

	Multi-port device tap **2 trunk cables (input, output)** **4 drop cables** **IP 65/NEMA 4 enclosure**	

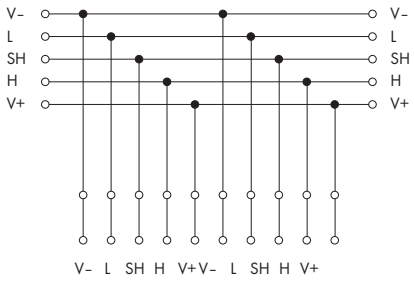

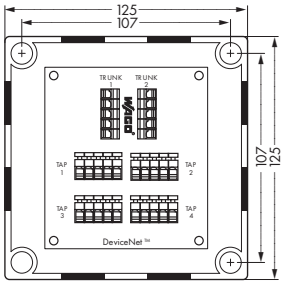

DeviceNet requires a terminating resistor to be installed at each end of the trunk. The resistor (metal fim resistor) requirements are: 121 Ohm ± 1 %, ¼ W.
Termination resistor should not be installed at the end of a drop; only at the two ends of the main trunk, as required.

Description		**Item No.**	**Pack. Unit**	
Multi-port device tap	4 drop cables	**810-900/000-001**	1	

Technical Data

CAGE CLAMP® connections for trunk cable	2 x 256-405 (PCB terminal strips)
CAGE CLAMP® connections for drop cable	4 x 255-405 (PCB terminal strips)
Enclosure	with knockouts for cable grips
Cross sections	0.08 mm² ... 2.5 mm² / AWG 28 ... 12
Cable diameter when using cable grips	
(see accessories below)	
- trunk cable	Ø 10 ... 14 mm
- drop cable	Ø 6 ... 12 mm
Degree of protection (enclosure)	IP 65/NEMA 4

Accessories

		Item No.	**Pack. Unit**	
Test adapter for mini banana plug		**810-900/004-000**	1	
Grips for - trunk cable	Ø 10 ...14 mm	**810-900/001-000**	1	
Grips for - drop cable	Ø 6 ... 12 mm	**810-900/002-000**	1	
Termination resistor		**810-900/003-000**	200	

	Multi-port device tap 2 trunk cables (input, output) 2 drop cables "open-style"	Multi-port device tap 2 trunk cables (input, output) 2 drop cables "open-style"

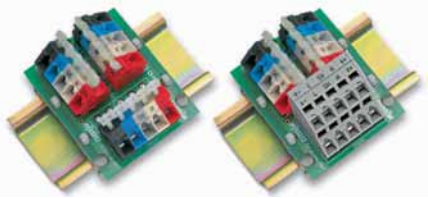

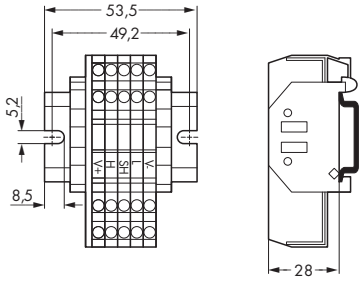

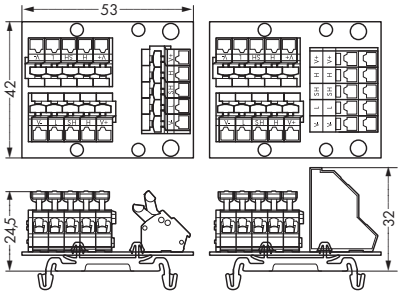

DeviceNet requires a terminating resistor to be installed at each end of the trunk. The resistor (metal fim resistor) requirements are: 121 Ohm ± 1 %, ¼ W.
Termination resistor should not be installed at the end of a drop; only at the two ends of the main trunk, as required.

Description		Item No.	Pack. Unit		Item No.	Pack. Unit
Multi-port device tap	2 drop cables	**810-901/000-001**	1	Single tap	**810-902/000-001**	5
				Double taps	**810-902/000-002**	1

Technical Data

CAGE CLAMP® connections for trunk cable		2 x 5 x 256 Series (PCB terminal strips)
CAGE CLAMP® connections for drop cable		1 x 5 x 256 Series / 1 x 5 x 736 Series (PCB terminal strips)
Terminal blocks	5 x 280-633	
End stops	2 x 249-116	
Mounting rail	DIN 35 rail, slotted as shown	
Cross sections	0.08 mm² ... 2.5 mm² / AWG 28 ... 12	0.08 mm² ... 2.5 mm² / AWG 28 ... 12

Accessories	Item No.	Pack. Unit	Item No.	Pack. Unit
Test adapter for mini banana plug	**810-901/001-000**	1	**810-901/001-000**	1
Termination resistor	**810-900/003-000**	200	**810-900/003-000**	200

Shield (Screen) Connecting System
Description and Handling

Carrier with grounding foot
45 mm/1.772 in long, busbar 90° to the rail
Item No. 790-113

Carrier with grounding foot
45 mm/1.772 in long, busbar parallel to the rail
Item No. 790-114

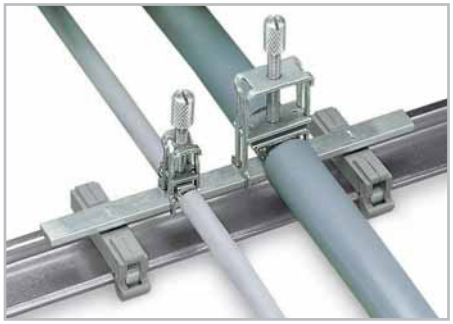

Carrier with 2 grounding feet
125 mm/4.921 in long, busbar parallel to the rail
Item No. 790-115

for all sizes of shield (screen) clamping saddles

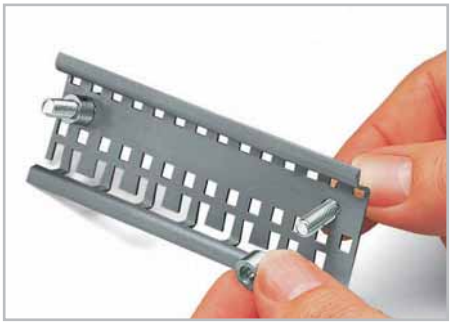

Using a stand off
with a special slotted carrier rail

Addition of a shield (screen) clamping saddle.

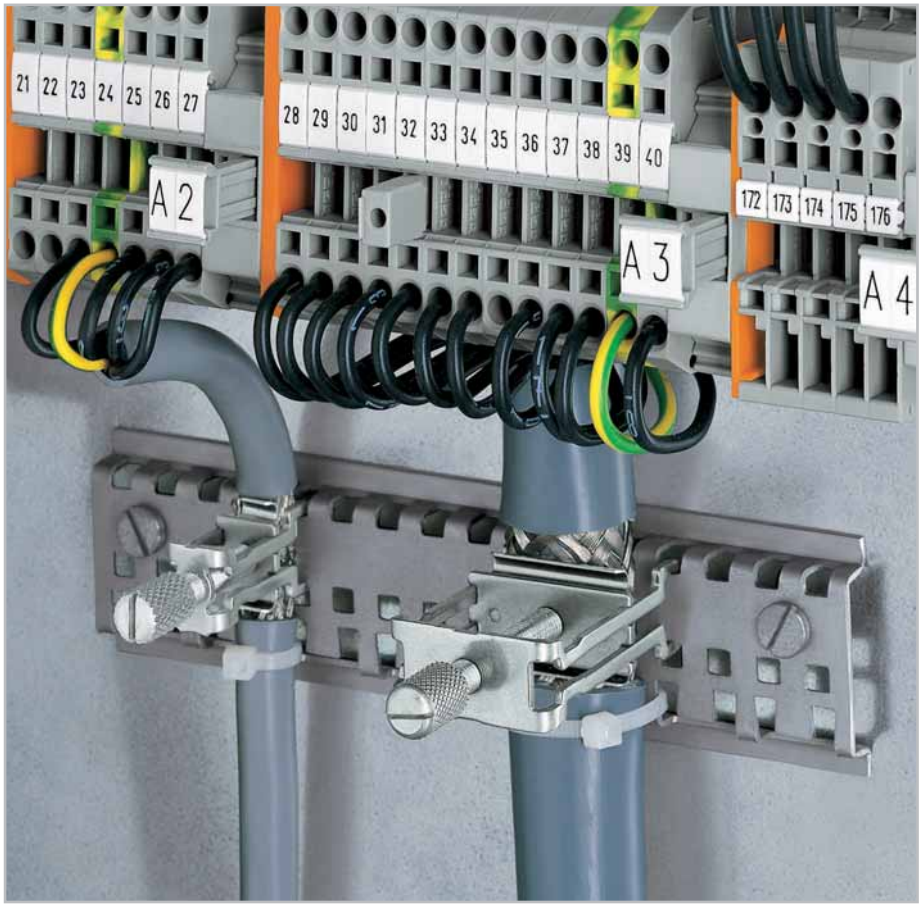

Tightenning/releasing a shield (screen) clamping saddle. To attach the clamping saddle, tighten the knurled screw. To remove, unscrew until ratcheted mechanism is released, then slightly tip saddle and remove the clamping saddle.

Mounting Options Based on Application

– carrier with grounding foot, busbar parallel to the rail

– isolated mounting carriers for a common shield (screen) reference potential, independent of the housing potential

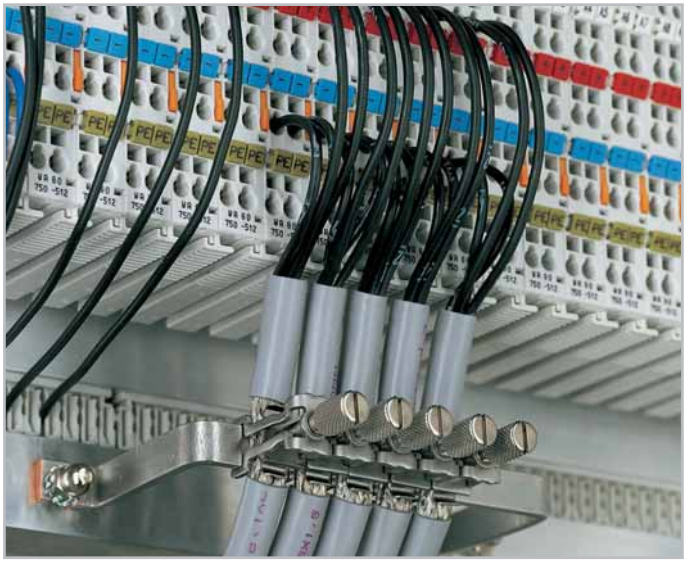

– U-shaped copper busbar 10 mm (0.394 in) x 3 mm (0.118 in)

– snap into any metal plate up to max. thickness 3 mm/0.118 in

Negative shield (screen) attenuation

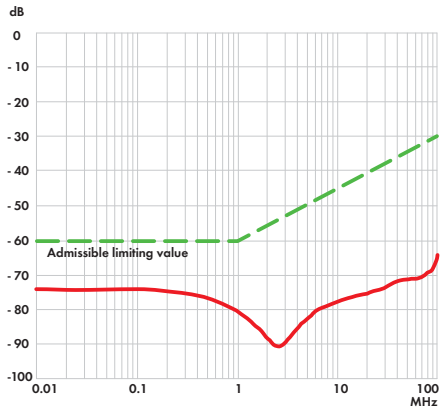

Shield (screen) clamping saddle size

Distance X	
11 mm	9.5 mm

Distance Y	
19 mm	17.5 mm
27 mm	25.5 mm
43 mm	41.5 mm

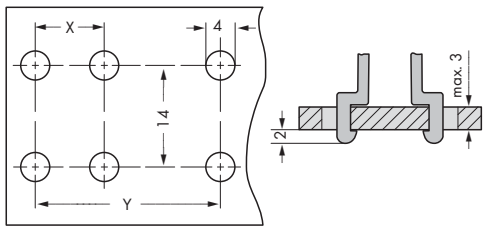

Hole dimensions for panel mounting

The WAGO shield (screen) connecting system is highly effective because the clamping unit can be brought very close to the unshielded part of the cable. Additionally, the spring material is part of the clamping saddle, giving good electrical connection and compensating for any deformation in the braiding. The system also acts as a partial strain relief.

Shield (Screen) Clamping Saddles and Shield (Screen) Clamps

Shield (screen) clamping saddles

Description		Diameter of Connectable Conductor	Item No.	Pack. Unit
Shield (screen) clamping saddle, incl. knurled screw	11 mm/0.433 in wide	up to 8 mm/0.315 in	**790-108**	50 (5x10)
	19 mm/0.748 in wide	7 mm/0.276 in to 16 mm/0.63 in	**790-116**	50 (5x10)
	27 mm/1.063 in wide	6 mm/0.236 in to 24 m /0.944 in	**790-124**	50 (5x10)
	43 mm/1.693 in wide	22 mm/0.866 in to 40 mm/1.575 in	**790-140**	50 (5x10)

Note: Not for ground connections!
Recommended tightening torque: 0.5 Nm
Assembly: The shield (screen) clamping saddle is shipped ready for direct connection to the busbar 10 mm (0.394 in) x 3 mm (0.118 in) or to a drilled mounting plate. After connection, tighten the knurled screw to complete the installation.
Removal: To remove a shield (screen) clamping saddle, unscrew until ratcheted mechanism is released, then slightly tip saddle and remove the clamping saddle.

Assembly

Removal

Installation position delivery

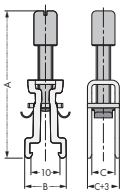

Closed position

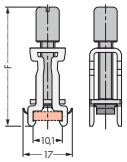

Removal position

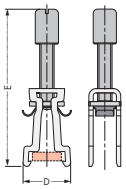

Dimensions in mm

Item No.	A	B	C	D	E	F
790-108	51	15	8	16	55	42
790-116	53	15	16	16	57	45
790-124	78	15	24	16	83	58
790-140	97	15	40	16	100	73

Shield (screen) clamps

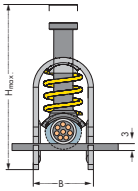

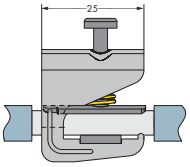

Description		Diameter of Connectable Conductor	Item No.	Pack. Unit
Shield (screen) camps	H_{max} 40 mm, B 10 mm	1.5 mm/0.059 in to 6.5 mm/0.256 in	**791-107**	50
	H_{max} 47 mm, B 17 mm	5 mm/0.197 in to 11 mm/0.434 in	**791-111**	50
	H_{max} 63 mm, B 23 mm	10 mm/0.394 in to 17 mm/0.670 in	**791-117**	50
	H_{max} 78 mm, B 30 mm	16 mm/0.631 in to 24 mm/0.946 in	**791-124**	50

Note: Not for ground connections!

Accessories for Shield (Screen) Clamping Saddles and Shield (Screen) Clamps

Carrier with grounding foot

Description		Item No.	Pack. Unit
Carrier with grounding foot	bar 90° to the rail, 10 mm (0.394 in) x 3 mm (0.118 in), bar a. foot – Cu with tin plating, 45 mm/1.774 in long	**790-113**	25
Carrier with grounding foot	bar parallel to the rail, 10 mm (0.394 in) x 3 mm (0.118 in), bar a. foot – Cu with tin plating, 15 mm/0.591 in long	**790-110**	25
Carrier with grounding foot	bar parallel to the rail, 10 mm (0.394 in) x 3 mm (0.118 in), bar a. foot – Cu with tin plating, 25 mm/0.986 in long	**790-112**	25
Carrier with grounding foot	bar parallel to the rail, 10 mm (0.394 in) x 3 mm (0.118 in), bar a. foot – Cu with tin plating, 45 mm/1.774 in long	**790-114**	25
Carrier with 2 grounding feet	bar parallel to the rail, 10 mm (0.394 in) x 3 mm (0.118 in), bar a. foot – Cu with tin plating, 125 mm/4.929 in long	**790-115**	25

Suitable shield (screen) clamping saddle or shield (screen)
clamps for carrier with grounding foot 790-110 = 790-108;
Carrier with grounding foot 790-112 = 790-108, 790-116, 791-111, 791-117;
Carrier with grounding foot 790-114 = 790-108, 790-116, 790-124, 790-140, 791-107, 791-111, 791-117, 791-124

Carrier rail

Stand off

Shield termination

Description		Item No.	Pack. Unit
Carrier rail	special slotted, 1000 mm/3'.3" long, Cu with tin plating, special lengths on request	**790-145**	1
Stand off	for special slotted carrier rail, use M 5 size screw	**790-144**	200 (2x100)
Shield termination including cable tie for shield			
diameter 5 mm /0.197 in to 10 mm /0.394 in	55 mm/2.169 in long	**709-350**	100 (4x25)
	150 mm/ 5.914 in long	**709-352**	100 (4x25)

Straight busbar

Isolated mounting foot

Isolated mounting foot

U-shaped busbar

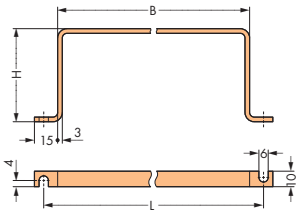

Description		Item No.	Pack. Unit
Straight busbar, 10 mm (0.394 in) x 3 mm (0.118 in), bar – Cu with tin plating	1000 mm/3'.3" long	**210-133**	20 (20x1)
	30 mm/1.181 in long	**790-133**	20 (20x1)
	50 mm/1.969 in long	**790-134**	20 (20x1)
Isolated mounting foot	for busbar, with standard screw M 4 x 8 mm	**790-100**	50 (2x25)
Isolated mounting foot	for busbar, with sheet metal screw (3.5 x 9) mm	**790-101**	50 (2x25)
U-shaped busbar, 10 mm (0.394 in) x 3 mm (0.118 in), Cu with tin plating	Dimensions (W x H x L) mm; 63 x 60 x 83	**790-190**	25 (5x5)
	Dimensions (W x H x L) mm; 100 x 60 x 118	**790-191**	25 (25x1)
	Dimensions (W x H x L) mm; 63 x 35 x 83	**790-192**	25 (5x5)
	Dimensions (W x H x L) mm; 100 x 35 x 118	**790-193**	25 (25x1)

Busbar carrier

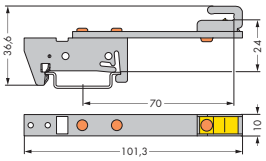

Busbar carrier, angulate

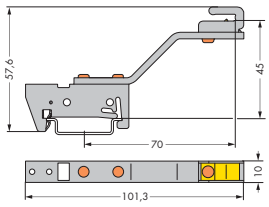

Description		Item No.	Pack. Unit
Busbar carrier	for busbars, 10 mm (0.394 in) x 3 mm (0.118 in) – Cu with tin plating	**790-300**	10
Busbar carrier, angulate	for busbars, 10 mm (0.394 in) x 3 mm (0.118 in) – Cu with tin plating	**790-301**	10

WAGO Takes Marking to the Next Level – Industry's Fastest Marking System Lowers Costs

- The upper marker slot allows fast, customized marking via:
  1. Marking strips
  2. WMB Inline markers
- Three-line marking is easier to scan/read
- Versatile, separable WMB Inline markers can be used on all marking levels

- Easily readable terminal block markings when connected – for all levels
- Easy-to mount marking strip and WMB Inline markers provide significant time savings
- Simple, easy-to-use design

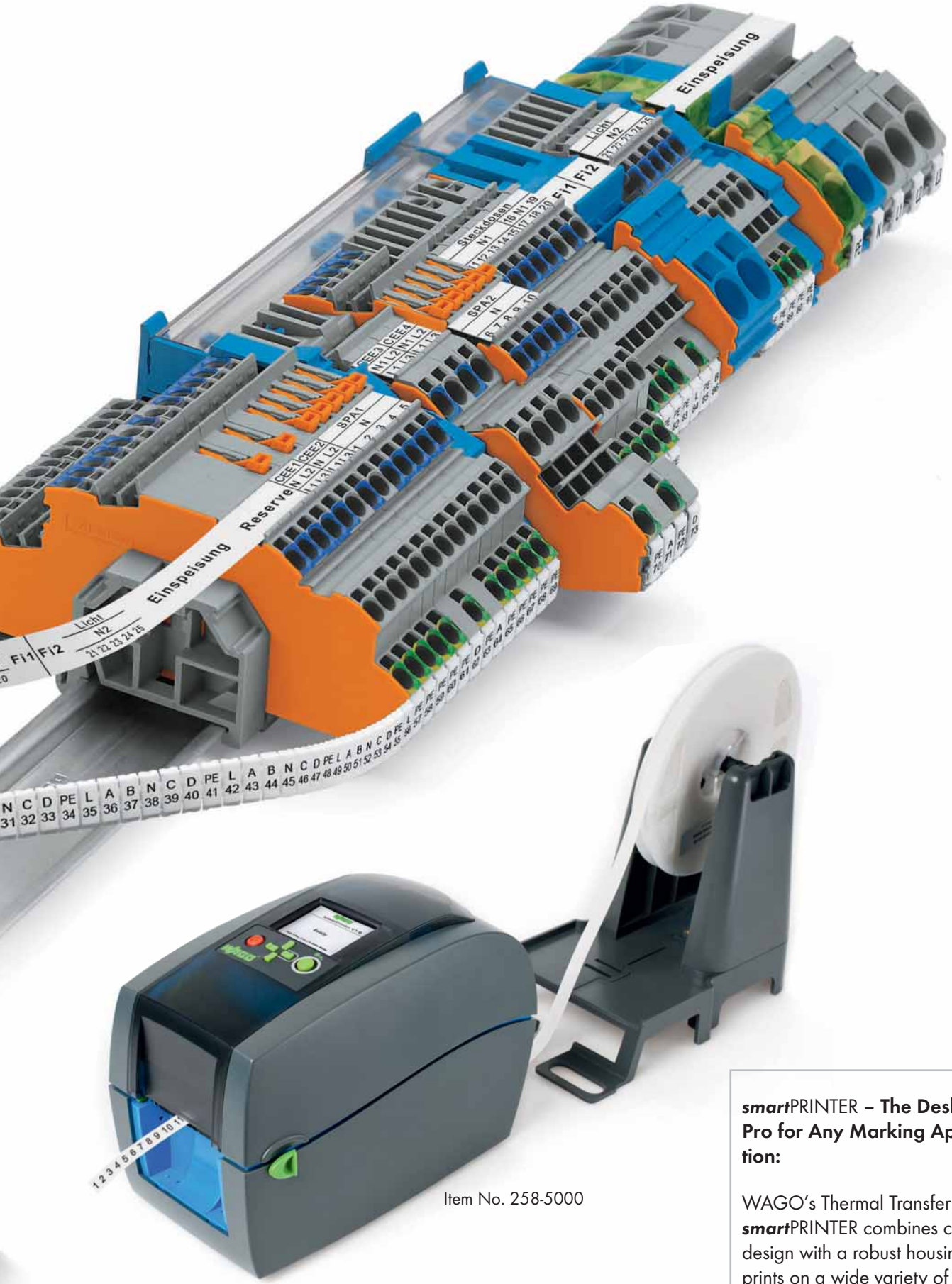

Item No. 258-5000

smartPRINTER **– The Desktop Pro for Any Marking Application:**

WAGO's Thermal Transfer ***smart***PRINTER combines compact design with a robust housing and prints on a wide variety of materials.

Smart Data Engineering
Supports Workflow from Control Cabinet up to installation

Electrical Engineering
Directly import data from the CAE circuit diagram into the ***smart***DESIGNER engineering software

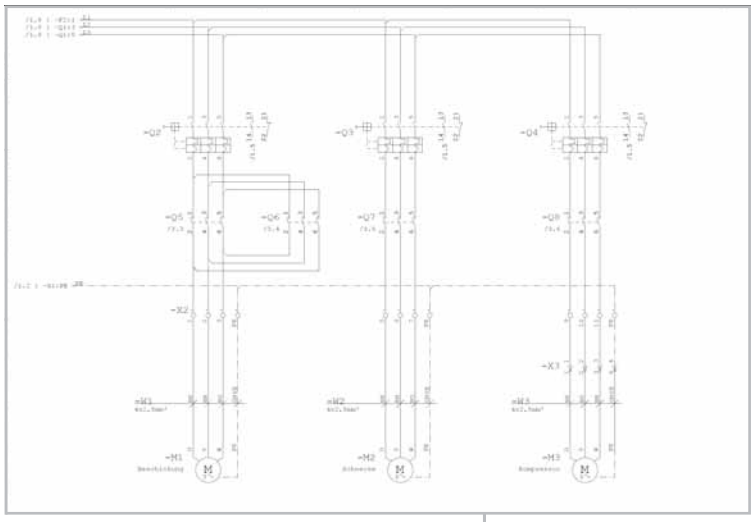

Technical and Commercial Item Data:
Classification by ETIM and ecl@ss – also in Advanced Format

Mechanical Engineering
CAD export into all standard CAD formats of different granularity

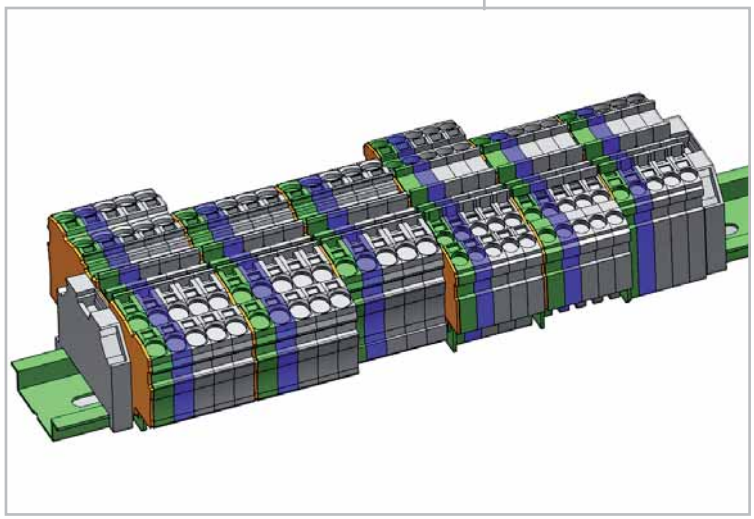

smartDESIGNER

- Free online configuration and ordering software for all electrical interconnect and automation components
- No installation
- Available worldwide 24 hours a day
- Current item data
- Edit via WAGO expert knowledge
- Design in full 3D

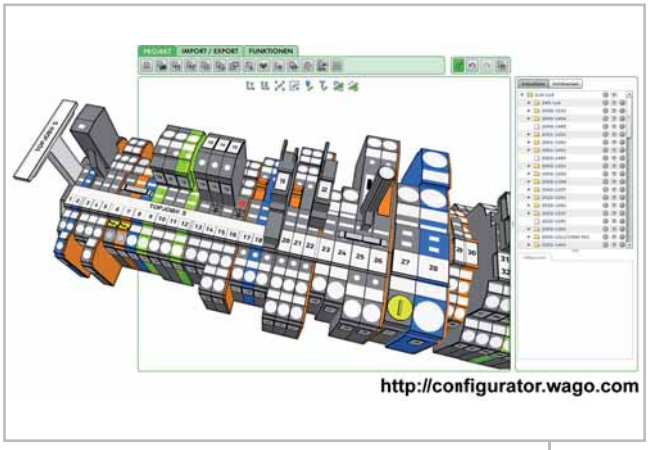

smartSCRIPT

- XML-based software for all WAGO marking materials
- Data import from CAE systems
- Font size check
- Material selection wizard

Configuration made easy – http://configurator.wago.com

Smart Data Engineering
Fast and Easy Control Cabinet Marking

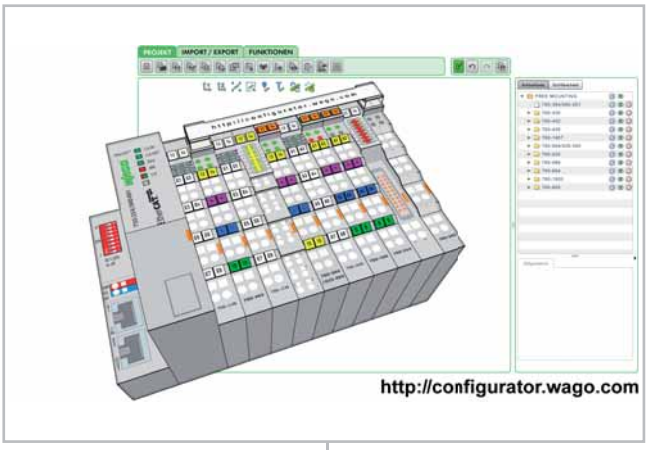

smartDESIGNER
After designing, print labeling materials directly out of the project via ***smart***PRINTER

smartPRINTER
Thermal transfer printer quickly and easily labels the entire control cabinet:

- WAGO marking strips and markers
- Type plates
- Push-button markers
- Labels
- Cable and wire markers

smartSCRIPT

- Import from CAE systems or create customized marking
- Print directly on ***smart***PRINTER

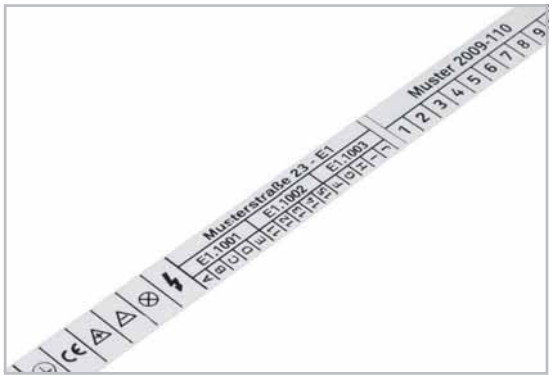

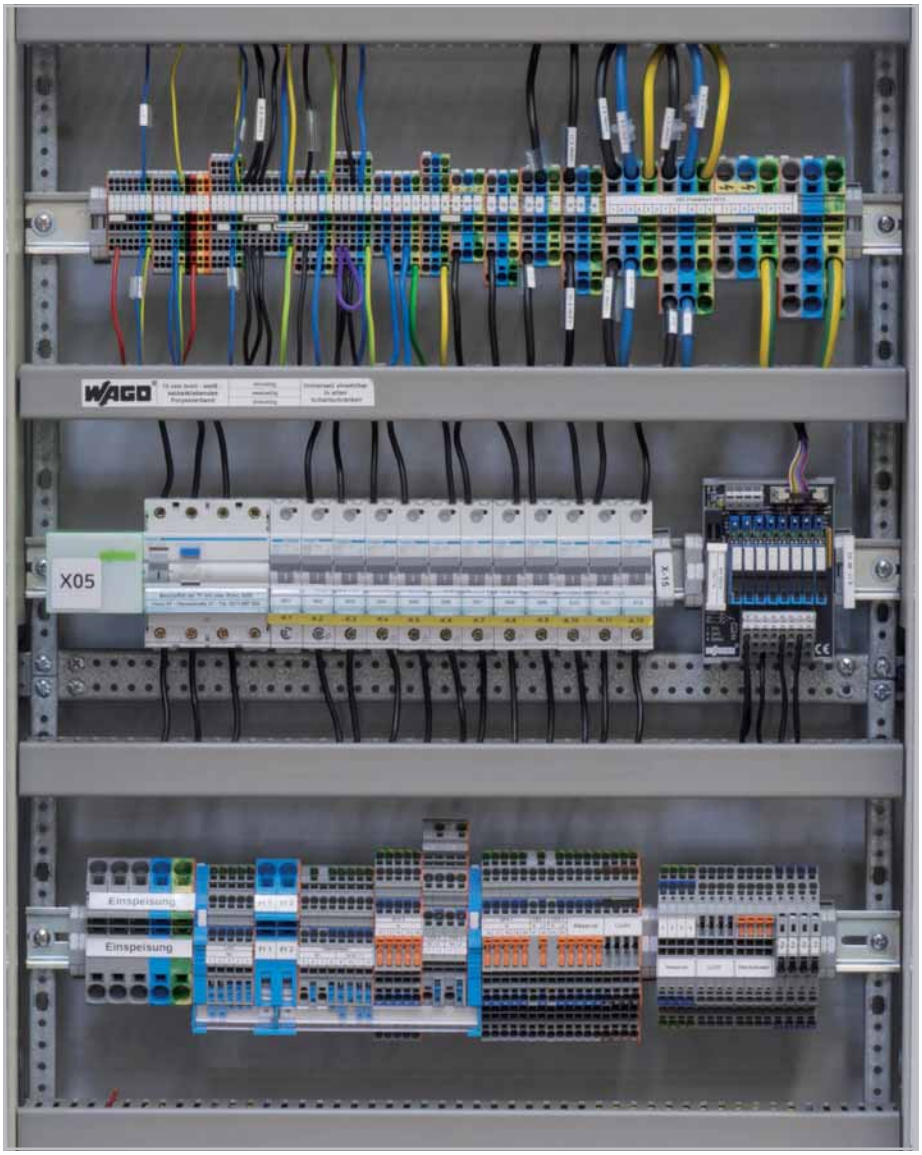

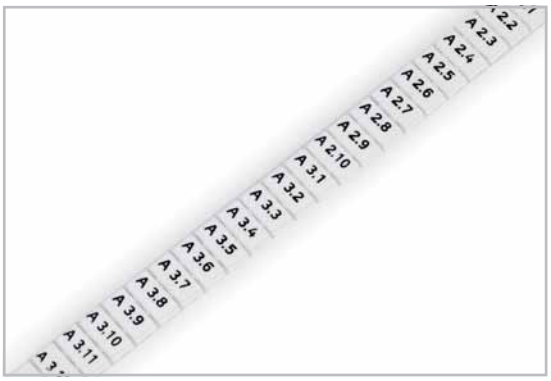

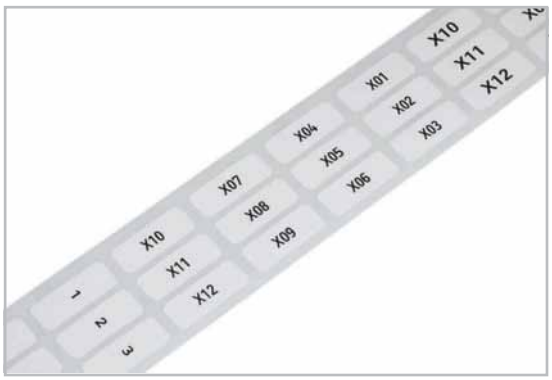

For more information, visit www.wago.com/printer or call us at +49-571-887-630

*smart*PRINTER
258 Series
Installation

Printer upon delivery

Accessories for material unwinding

Open the printer.

Insert the ink ribbon.

Prepare the marking material.

Printing 2009-110 Marking Strips on TOPJOB® S Terminal Blocks via smartPRINTER.

Insert and secure the suitable roller into the printer.

Printer has several interfaces.

Fast, cost-effective and easy to use – Printing WMB Inline markers via ***smart***PRINTER

Thermal Transfer Printer
*smart*PRINTER

Description	Item No.	Pack. Unit
smartPRINTER		
Includes:		
- Power supply and cable		
- USB cable		
- 1 reel each for marking strips and WMB Inline markers		
- 2 rollers		
- 1 reel holder		
- 1 ink ribbon		
- ***smart***SCRIPT marking software and driver		
	258-5000	1

Accessories

Ink ribbon for *smart*PRINTER		
	258-5005	1
Roller for *marking*STRIP		
	258-5006	1
Roller for WMB Inline		
	258-5007	1
Roller for Mini-WSB Inline		
	258-5008	1
Carrying case for *smart*PRINTER		
Light gray, with foam padding for printer		
Dimensions (W x H x D): 50 x 26 x 33 cm		
	258-5015	1

Technical Data

Printing method	Thermal transfer
Print head	Glass layer, spring-mounted
Print speed	max. 127 mm/s
	(WAGO recommends 50.8 mm/s)
Print width (max.)	47 mm
Print length (max.)	762 mm
Print resolution	300 dpi (12 pixels/mm)
Transmissive/reflective sensor	Yes, centrally mounted
Operating display	Color TFT LCD with navigation button
Memory	8 MB Flash, 16 MB SDRAM
Interfaces	USB, RS-232, ETHERNET 10/100 Mbps
Operating voltage	100 ... 240 VAC, 50 ... 60 Hz
	(automatic adjustment)
Dimensions (mm) W x H x L	135 x 175 x 245
Weight	2000 g (without printing material)
Operating temperature	5 °C ... 40 °C (41 °F ... 104 °F)
Storage temperature	-20 °C ... 50 °C (-4 °F ... 122 °F)
Safety approvals	CE (EMC)
Ink ribbon	External roll diameter: 40 mm;
	Internal core diameter: 0.5" (12.7 mm);
	Max. length: 110 m; Max. width: 58 mm

Thermal Transfer Printer
WAGO TP 298+

Description	Item No.	Pack. Unit
Thermal Transfer Printer TP 298+		
Resolution: 300 dpi		
Includes software and print roller (258-178)		
for WMB Inline markers and marking strips (2009 and 709 Series)		
	258-298	1

Technical Data	
Printing method	Thermal/thermal transfer
Print head	Thick-film transfer head
Print resolution	300 dpi
Print speed	100 mm/sec.
Print width (max.)	108.4 mm
Transmissive/reflective sensor	Default
Processor (32-bit, ColdFire)/clock rate	64 MHz
Memory	8 MB RAM
Program memory (ROM)	4 MB Flash
Slot for memory card	CompactFlash, Type 1
Interfaces	ETHERNET 10/100 Base T,
	RS-232 (COM), USB
Accessories (optional)	Cutter, external winder, external unwinder,
	CompactFlash memory card (16–512 MB)
Operating voltage	100 V ... 240 VAC /
	50 Hz ... 60 Hz, PFC
Dimensions (mm) W x H x L	242 x 274 x 446
Weight	10,000 g
Operating temperature	10 °C ... 35 °C
Relative humidity	30 % ... 85 %
Safety approvals	CE, FCC Class 1
Accessories	1 x USB cable; 1 x serial cable;
	Marking strips (1 x 2009-110);
	Ink ribbon (1 x 258-149)

Application Table for Ink Ribbon/Marking Material/Printer

Item No.	Width	Ink ribbon	Marking Material	Printer
258-143	60 mm	Resin/wax	Labels (paper)	All types
258-144	100 mm	Resin/wax	Labels (paper) for cable marking (211-155/211-156)	All types
258-145	38 mm	Resin	Marking strips, 2009 Series (2009-xxx) Marking strips, 709 Series (709-xxx) WMB Inline markers	TP 298+
258-149	50 mm	Resin	Marking strips, 2009 Series (2009-xxx) Marking strips, 709 Series (709-xxx) WMB Inline markers	TP 298+
258-150	76 mm	Resin	Wire labels (211-111/211-121) (polyester) up to 76 mm	All types
258-157	100 mm	Resin	Labels (polyester) up to 100 mm	All types

Plotter
IP 200

- Robust, aluminum design
- Plotting area, DIN A4: 220 mm x 305 mm
- Easy-to-replace marker receptacles
- Automatic calibration
- Up to 10.5 mm high markers can be plotted
- Special solutions for up to 15 mm high markers are available
- Universal power supply ranging from 100 ... 240 VAC
- Smudge-free plotting right from the very first marker
- PC interfaces: USB ports
- Control language: HPGL
- IP 200 firmware can be updated via PC and Internet

Description	Item No.	Pack. Unit
Flatbed Plotter IP 200	**258-200**	1

Technical Data	
Maximum plot area	200 mm x 305 mm
Interfaces	USB 1.1
Control language	Based on HP-GL 7475A
Data buffer	16 MB
Speed	max. 40 mm/sec.
Drive system	Two-phase stepper motor
Plotter pen	Special plotter pens with HP receptacle
Addressable resolution	0.01 mm
Repeat accuracy	0.05 mm
Repeat accuracy after pen change	0.05 mm with optimum pen
Voltage supply	Separate power supply with exchangeable plug adapters
Operating voltage	100 V ... 240 V / 50 Hz ... 60 Hz
Current consumption (internal)	0.7 A max. at 220 VAC
Dimensions (mm) W x H x L	125 x 440 x 440
Operating temperature	10 °C ... 35 °C
Relative humidity	35 % ... 75 %
Safety approvals	EN 60950-1
Immunity to interference	EN 55022 B
Included:	IP 200 Plotter
	power supply
	USB data cable
	operating manual and software

Accessories

Ink ribbon for labels

Ink ribbon for marking strips

Description		Item No.
Ink ribbon for marking strips and WMB Inline markers	Resin, 38 mm x 300 m	**258-145**
	Resin, 50 mm x 300 m	**258-149**
Ink ribbon for wire markers (211 Series) and polyester labels	76 mm wide x 300 m	**258-150**
	100 mm wide x 300 m	**258-157**
Ink ribbon for paper labels	Resin/wax, 60 x 300 mm wide	**258-143**
	Resin/wax, 100 x 300 mm wide	**258-144**

All ink ribbons are suitable for TP 298. For detailed ordering information, please refer to the **"Application Table for Ink Ribbon/Marking Material/Printer."**

External coil mounting system

Cutter (TP 298)

Spare roller (TP 298)

Description		Item No.
External coil mounting system	for 2009-135 WMB Inline (8,000 markers)	**258-169**
Cutter (TP 298)		**258-161**
Spare roller (TP 298) for labels	(up to device series no. 40,000)	**258-162**
Spare roller (TP 298) for labels	(from device series no. 40,000)	**258-177**
Spare roller (TP 298) for WMB Inline markers	(up to device series no. 40,000)	**258-166**
Spare roller (TP 298) for WMB Inline markers	(from device series no. 40,000)	**258-178**
Carrying case for TP 298		**258-171**
Retractable handle for carrying case (TP 298)		**258-173**

WMB Inline markers

Marking strips

Description		Item No.
WMB Inline, 4 mm pitch, stretchable from 4 ... 4.2 mm, on roll	White, 2,000 markers	**2009-114**
WMB Inline, 5 mm pitch, stretchable from 5 ... 5.2 mm, on roll	White, 1,500 markers	**2009-115**
WMB Inline, 5 mm pitch, stretchable from 5 ... 5.2 mm, on roll	White, 8,000 markers	**2009-135**
Marking strip for TOPJOB® S,		
white, plain, 11 mm wide	50 m roll	**2009-110**
Marking strip for 870, 869, 862 and 270 Series,		
white, plain, 7.5 mm wide	50 m roll	**709-178**
Marking strip for 870, 869, 862 and 270 Series,		
translucent, plain, 7.5 mm wide	50 m roll	**709-177**

Accessories

Marker card (12 mm) for thermal transfer printer

Marker card (12 mm) for plotter

Labels on roll

Labels on DIN A4 sheets

Dimensions of self-laminating label

Description		Item No.
Marker card for thermal transfer printer	12 mm	**211-111**
	23 mm	**211-121**
Marker card for plotter	12 mm	**211-110**
(requires 258-370 Carrier Plate for plotting)	23 mm	**211-120**
Labels on roll for thermal transfer printer	Label surface: "S"=8 mm, "B"=18 mm, "L"=35 mm, for max. 9 mm cable diameter, 9,000 labels per roll	**211-155**
	Label surface: "S"=13 mm, "B"=23 mm, "L"=51 mm, for max. 12 mm cable diameter, 5,000 labels per roll	**211-156**
Labels on DIN A4 sheets for laser printer	Label surface: "S"=9 mm, "B"=17 mm, "L"=35 mm,	**211-150**
(requires 258-383 Carrier Plate for plotting)	for max. 14 mm cable diameter, 70 labels per sheet	
	Label surface "S"=13 mm, "B"=21 mm, "L"=56 mm,	**211-151**
	for max. 14 mm cable diameter, 32 labels per sheet	
Marking sleeve, 12 mm long, for wire diameter	1.6 mm ... 3.2 mm or 0.25 mm² ... 1.5 mm²	**211-112**
	2.2 mm ... 4.5 mm or 0.5 mm² ... 4 mm²	**211-113**
	3.7 mm ... 5.9 mm or 2.5 mm² ... 6 mm²	**211-114**
	4.8 mm ... 7.5 mm or 6 mm² ... 16 mm²	**211-115**
Marking sleeve, 23 mm long, for wire diameter	1.6 mm ... 3.2 mm or 0.25 mm² ... 1.5 mm²	**211-122**
	2.2 mm ... 4.5 mm or 0.5 mm² ... 4 mm²	**211-123**
	3.7 mm ... 5.9 mm or 2.5 mm² ... 6 mm²	**211-124**
	4.8 mm ... 7.5 mm or 6 mm² ... 16 mm²	**211-125**
Marking sleeve for cable tie	23 mm, for 10 mm² wires and larger	**211-129**
Cable tie (2.5 x 100) mm		**807-090/101-100**
Marker for I/O components	Plotter, 12 x 7 mm	**211-211**
(requires 258-371 Carrier Plate for plotting)		
Marking strips	15 mm, white, 50 m roll	**210-701**
Carrier for marking strips	Transparent, 1 m long	**709-120**
Carrier through element	Adjustable in height	**709-118**
Carrier end element	Adjustable in height	**709-119**
Continuous label	3 mm, white, 12 lengths at 25 m	**210-732**
Label roll	70 x 100 mm, white, 500 pcs/roll	**210-703**
Label roll	70 x 100 mm, silver, 500 pcs/roll	**210-704**
Label roll	6 x 15 mm, white, 3,000 pcs/roll	**210-705**
Label roll	6 x 15 mm, yellow, 3,000 pcs/roll	**210-705/000-002**
Label roll	9 x 15 mm, white, 3,000 pcs/roll	**210-706**
Label roll	9 x 15 mm, yellow, 3,000 pcs/roll	**210-706/000-002**
Label roll	8 x 20 mm, white, 3,000 pcs/roll	**210-707**
Label roll	8 x 20 mm, yellow, 3,000 pcs/roll	**210-707/000-002**
Label roll	9.5 x 25 mm, white, 3,000 pcs/roll	**210-708**
Label roll	35 x 5 mm, white, 4,000 pcs/roll	**210-710**

More labels at www.marschall-pw.de

Accessories

WAGO plotter pen (disposable) Line width: 0.18 mm

WAGO plotter pen (disposable) Line width: 0.25 mm

WAGO plotter pen (disposable) Line width: 0.35 mm

Engraver set

Description		Item No.
WAGO plotter pen (disposable)	Line width: 0.18 mm	**258-326**
	Line width: 0.25 mm	**258-327**
	Line width: 0.35 mm	**258-328**
	Line width: 0.5 mm	**258-329**
Calibration aid		**258-453**
Engraver set	Engraver sizes: 0.2/0.3/0.4/0.5/0.7/1 mm	**258-452**
Engraver	Engraver size: 0.2 mm	**258-452/000-002**
	Engraver size: 0.3 mm	**258-452/000-003**
	Engraver size: 0.4 mm	**258-452/000-004**
	Engraver size: 0.5 mm	**258-452/000-005**
	Engraver size: 0.7 mm	**258-452/000-007**
	Engraver size: 1 mm	**258-452/000-010**
Engraver (stainless steel)	Engraver size: 0.2 mm	**258-458/000-002**
	Engraver size: 0.4 mm	**258-458/000-004**
Vacuum cleaner bag for EG 450 Engraver		**258-457**

Accessories

Description		Item No.
Carrier plates for WAGO	WSB 5 mm (209-501)	**258-361**
	WSB 4 mm (209-701)	**258-362**
	Miniature WSB (248-501)	**258-363**
	WCB (249-200)	**258-366**
	WMB 5/5.2 mm (793-5501); WMB 4/4.2 mm (793-4501); WMB 3.5 mm (793-3501)	**258-368**
	T-marking strips (209-290)	**258-365**
	Marking strips (2009-110 + 2009-130 and 790-...)	**258-410**
	WTB (799-501)	**258-367**
	Group marker carrier (209-112)	**258-364**
	Marker tags (210-199 + 209-200)	**258-369**
Carrier plates for Murrplastik	MP-400; KS 4/12, 4/18, 4/23, 4/30	**258-370**
	MP-401; KES, KLG, KMR, KPX, KS 15x17/27/49/67, KSA, KSF, KSI, KSK, KSO, KSS, KTE,	**258-371**
	KWI, SKS, WGO, KAB	
	BS 5/6	**258-397**
	KSEX; 10/500	**258-470**
	KPX	**258-396**
	KSEX; 18/500	**258-471**
Universal engraver and plotter carrier plates	90 mm x 100 mm x 3	**258-454**
	60 mm x 100 mm x 4	**258-455**
	30 mm x 100 mm x 9	**258-456**
Carrier plates for Phoenix	ZBM	**258-372**
	ZB	**258-373**
	ZBN	**258-374**
	ZBFM	**258-375**
	BNZ	**258-377**
	BN-ZB	**258-378**
	SS-ZB	**258-379**
	LBHZ	**258-380**
	PAB	**258-381**
	GPE	**258-382**
Universal engraver and plotter carrier plates	DIN A4	**258-383**
	DIN A3	**258-472**
Carrier plates for Weidmüller	MC Universal	**258-387**
	MC SF4-6	**258-388**
Carrier plate for Wörtz/Allen Bradley	Universal	**258-389**
Carrier plates for Möller	XB M22-XST	**258-390**
Carrier plates for Partex	PA+1	**258-391**
	PA+2	**258-392**
Carrier plates for ABB Entrelec	Universal	**258-394**
	Siemens PLC	**258-473**
Carrier plates for Contra-Clip	Universal	**258-398**
	PK2 PVC	**258-393**
	PA+ 2	**258-399**

Marking System

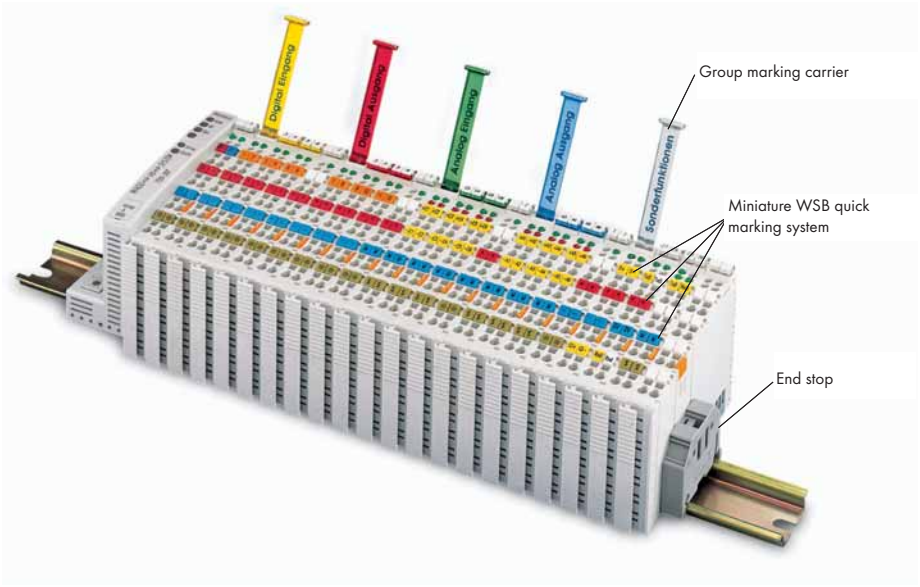

WMB Multi marking system

Miniature quick marking card

Colored marker cards

WMB Inline

Description		Item No.	Item No.	Pack. Unit
Marker cards for group marking carrier	sheet DIN A4 (160 cards)	**750-100**		1 sheet
WMB Multi marking system for terminal block width 3.5 mm	plain	**793-3501**		5 cards
WMB Multi marking system for terminal block width 4 - 4.2 mm strechable 4 - 4.2 mm	plain	**793-4501**		5 cards
WMB Multi marking system for terminal block width 5 - 17.5 mm strechable 5 - 5.2 mm	plain	**793-5501**		5 cards
Miniature WSB quick marking system for terminal block width 5 - 17.5 mm	plain	**248-501**		5 cards
WSB Quick marking system for module width 5 - 17.5 mm	plain	**209-501**		5 cards
Additional item no. for colored marker cards	yellow		**.../000-002**	5 cards
	red		**.../000-005**	5 cards
	blue		**.../000-006**	5 cards
	gray		**.../000-007**	5 cards
	orange		**.../000-012**	5 cards
	light green		**.../000-017**	5 cards
	green		**.../000-023**	5 cards
	violet		**.../000-024**	5 cards
WMB Inline, pitch 4 mm, stretchable, 4 mm ... 4.2 mm, on reel	white, 2000 pieces	**2009-114**		
WMB Inline, pitch 5 mm, stretchable, 5 mm ... 5.2 mm, on reel	white, 1500 pieces	**2009-115**		1 Coil
WMB Inline, pitch 5 mm, stretchable, 5 mm ... 5.2 mm, on reel	white, 8000 pieces	**2009-135**		1 Coil
Mini-WSB Inline, plain, 1,700 Mini-WSB markers (5 mm) on roll, stretchable 5 - 5.2 mm		**2009-145**		1 Coil
Spare roller for TP 298+		**258-183**		1
Group marker carrier adjustable in height (43.5 mm ... 60 mm), for end stops 249-116 and 249-117	for 1 marker card or self-adhesive label and transparent cover protection		**249-119**	50 (2x25)
	for 2 WSB Quick markers or 1 x continuous marking strip		**249-118**	100 (4x25)
	with marker surface 41 mm/1.61 in, 6 mm/0.23 in wide		**249-120**	50 (2x25)
Group marker carrier	for up to 3 WMB markers, 15 mm/0.591 in wide		**209-140**	50 (2x25)
Group marker carrier	for snapping into screwless end stops, 10 mm/0.394 in wide		**209-112**	100 (2x50)
Marker card	from white cardboard, for self-marking, 100 markers per sheet		**209-113**	1 (1x1)
Protection cover	transparent		**209-114**	50 (1x50)

Accessories

Miniature WSB Quick Marking System

Description		Item No.	Pack. Unit
Miniature WSB quick marking system,			
Marking per card:			
0 V	100 x blue	**247-506/000-006**	5 cards
0 V	100 x white	**247-506**	5 cards
-	100 x blue	**247-507/000-006**	5 cards
-	100 x white	**247-507**	5 cards
24 V	100 x red	**247-508/000-005**	5 cards
24 V	100 x white	**247-508**	5 cards
+	100 x red	**247-509/000-005**	5 cards
+	100 x white	**247-509**	5 cards
⏚	100 x light green	**247-552/000-017**	5 cards
⏚	100 x white	**247-552**	5 cards
PE	100 x light green	**248-578/000-017**	5 cards
PE	100 x white	**248-578**	5 cards
A0 A1 ... A8 A9	10 x white	**247-510**	5 cards
E0 E1 ... E8 E9	10 x white	**247-511**	5 cards
X0 X1 ... X8 X9	10 x white	**247-512**	5 cards
0 to 09	10 x white	**247-513**	5 cards
10 to 19	10 x white	**247-514**	5 cards
20 to 29	10 x white	**247-515**	5 cards
30 to 39	10 x white	**247-516**	5 cards
40 to 49	10 x white	**247-517**	5 cards
50 to 59	10 x white	**247-518**	5 cards
60 to 69	10 x white	**247-519**	5 cards
70 to 79	10 x white	**247-520**	5 cards
80 to 89	10 x white	**247-521**	5 cards
90 to 99	10 x white	**247-522**	5 cards
00 to 49	2 x white	**247-523**	5 cards
50 to 99	2 x white	**247-524**	5 cards
100 to 149	2 x white	**247-525**	5 cards
150 to 199	2 x white	**247-526**	5 cards
200 to 249	2 x white	**247-527**	5 cards
250 to 299	2 x white	**247-528**	5 cards
300 to 349	2 x white	**247-529**	5 cards
350 to 399	2 x white	**247-530**	5 cards
400 to 449	2 x white	**247-531**	5 cards
450 to 499	2 x white	**247-532**	5 cards
500 to 549	2 x white	**247-533**	5 cards
550 to 599	2 x white	**247-534**	5 cards
600 to 649	2 x white	**247-535**	5 cards
650 to 699	2 x white	**247-536**	5 cards
700 to 749	2 x white	**247-537**	5 cards
750 to 799	2 x white	**247-538**	5 cards
800 to 849	2 x white	**247-539**	5 cards
850 to 899	2 x white	**247-540**	5 cards
900 to 949	2 x white	**247-541**	5 cards
950 to 999	2 x white	**247-542**	5 cards
.0 to .7 / plain	10 x /20 x white	**247-543**	5 cards
.0 to .7 /-	10 x /20 x white	**247-544**	5 cards
.0 to .7 /-	10 x /20 x blue	**247-544/000-006**	5 cards
.0 to .7 /+	10 x /20 x white	**247-545**	5 cards
.0 to .7 /+	10 x /20 x red	**247-545/000-005**	5 cards
.0 to .7 /N	10 x /20 x white	**247-546**	5 cards
.0 to .7 /N	10 x /20 x blue	**247-546/000-006**	5 cards
.0 to .7 /L	10 x /20 x white	**247-547**	5 cards

750/753 Series Marker Carrier

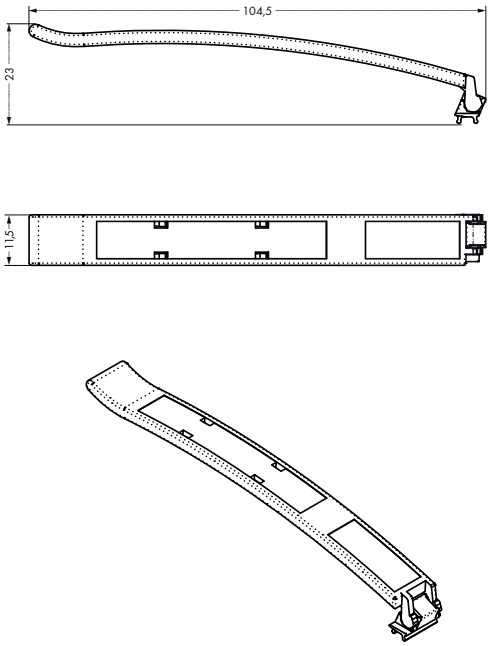

The hinged 750-103 Marker Carrier allows group marking of WAGO-I/O-SYSTEM 750/753 Series components, while featuring a large area for self-marking.
The marker carrier can be accommodated in the upper miniature WSB carrier plate.

Description	Item No.	Pack. Unit
750/753 Series Marker Carrier	**750-103**	50

Accessories	Item No.	Pack. Unit
Marker strips for thermal transfer printer (plain; white; 7.5mm/0.29in wide; 50m roll)	**709-178**	1
Markers for marker carriers (plain; white; DIN A4 sheets with removable strips 52 x 8.5mm/0.33in; 99 pieces/sheet)	**750-105**	500

Technical Data	
Dimensions (in mm)	
Width	11.5 mm
Length	104.5 mm
Material	Polycarbonate
Weight	2.84 g

Marker Carriers for 750/753 Series

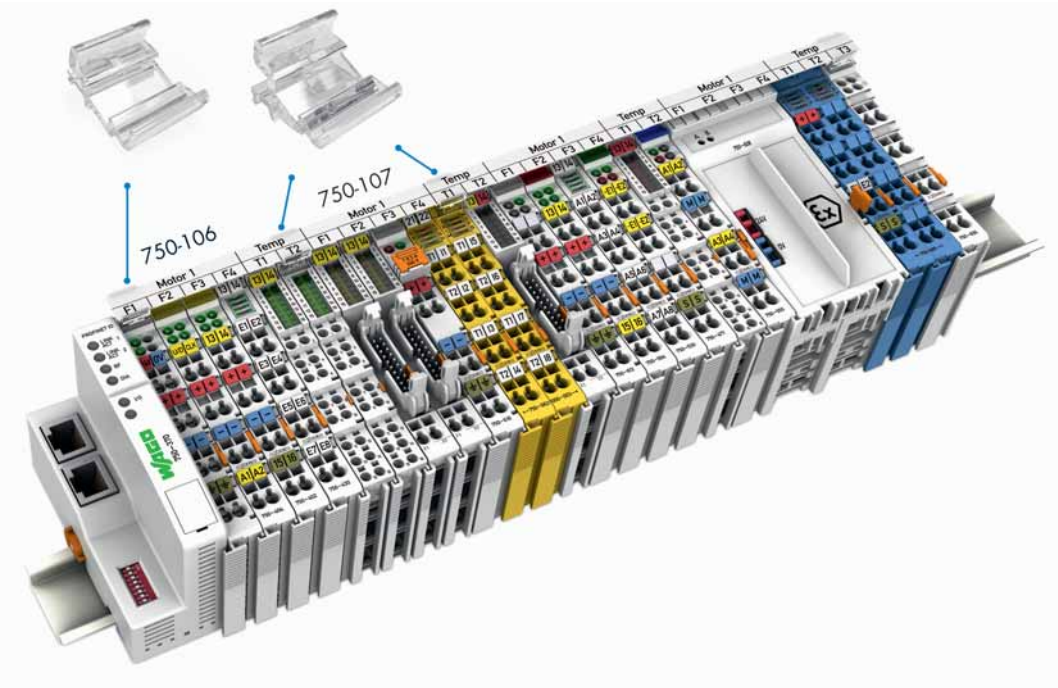

WAGO's 750-106 and 750-107 Marker Carriers allow I/O functions to be identified throughout the node via continuous marking strips. Both carrier models permit continuous marking regardless of the I/O module housing used.

- 750-106, for I/O module housing with up to 4 LEDs, as well as for 48 mm I/O module housing
- 750-107, for I/O module housing with 8 or 16 LEDs

The marker carrier can be accommodated in the upper miniature WSB marker slot. It is not necessary to use a carrier on each I/O module to mount the marking strip.

Description	Item No.	Pack. Unit
Marker Carrier for 750/753 Series, 4 LEDs	**750-106**	50
Marker Carrier for 750/753 Series, 8/16 LEDs	**750-107**	50

Accessories	Item No.	Pack. Unit
Marking strip, plain, 11 mm wide, 50 m roll	**2009-110**	1
WMB Inline, pitch 5 mm, stretchable, 5 mm ... 5.2 mm, on reel	**2009-115**	1

Technical Data	
Material	Polycarbonate
Weight	0.4 g

Wire and Cable Marking
– Description and Handling –

Wire marking

The following markers are available:
Markers for plotter marking.

Markers on roll for thermal transfer printing.

Remove the printed marker from the roll.

Slide the plotted marker into the marking sleeve receptacle. Exchanging the marker is also possible after the conductor has been terminated.

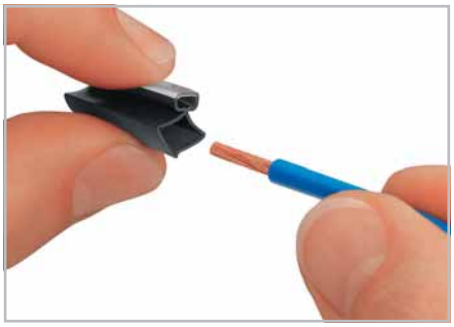

Compress the sleeve and slide it onto the conductor to be marked.

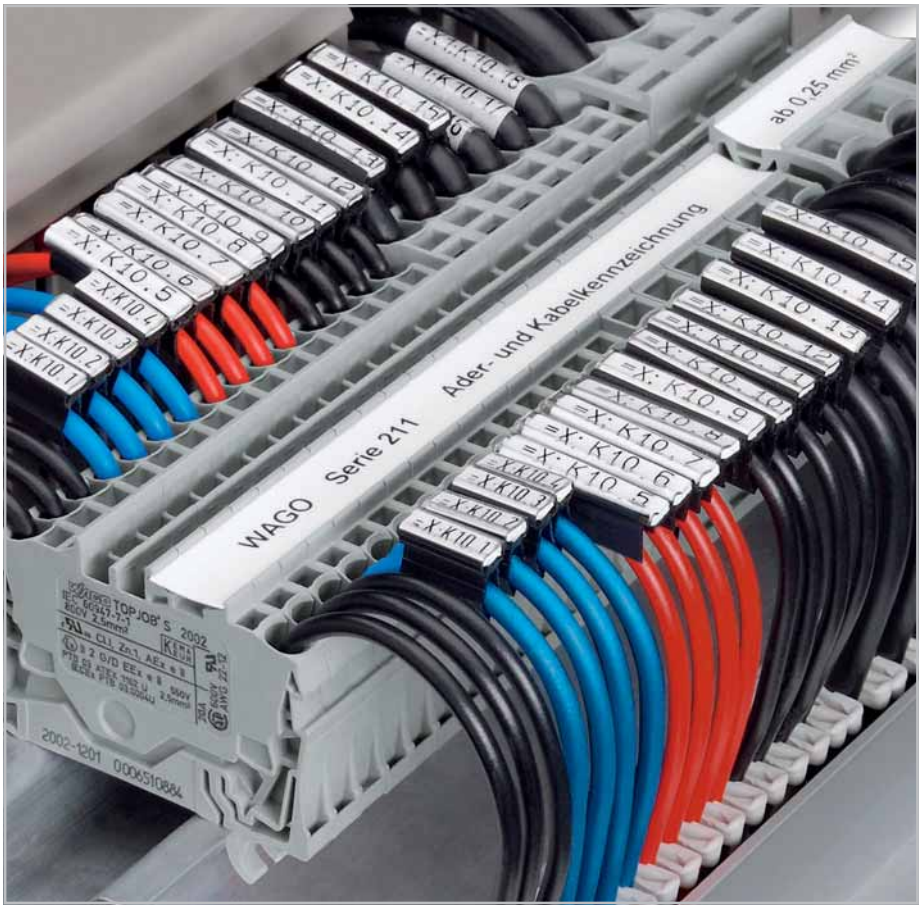

smartPrinter

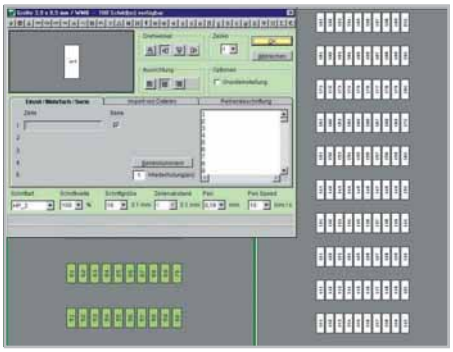

WAGO smartMarking Software

TP 298+ Thermal Transfer Printer

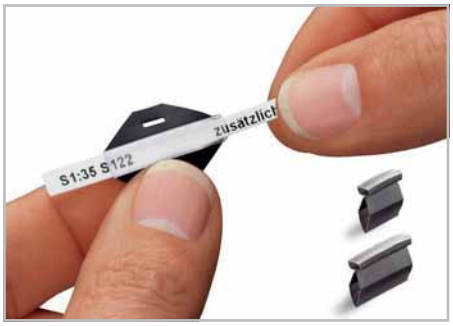

Slide it through the marker receptacle up to the end of the sleeve.

Then remove the rest of the marker by twisting it off.

Attach the 211-129 marking sleeve to individual cables or conductors via cable ties.

Wire marking

Wire marker for thread-on mounting for 2.5 - 6 mm²

Wire marking

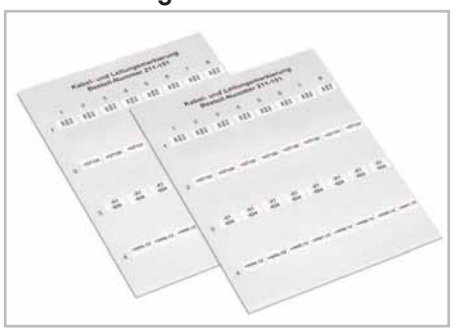

Self-laminating labels are available on A4 sheets for laser printers (plotters) are supplied on roll for thermal transfer printers.

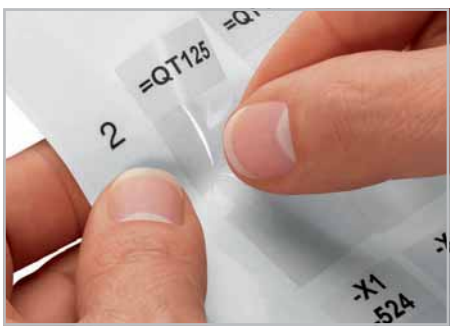

Remove the printed label from the sheet or roll.

Wrap it around the conductor or cable.

The transparent laminate protects the marking.

Wire and Cable Marking
for Conductors from 0.25 to 25 mm²

Marking sleeve

Item No.	Pack. Unit
Marking sleeve, 12 mm long, halogene-free, for one marker, to be fitted prior to conductor termination, for wire Ø 1.6 - 3.2 mm or 0.25 - 1.5 mm²	
211-112	2000
for wire Ø 2.2 - 4.5 mm or 0.5 - 4 mm²	
211-113	2000
for wire Ø 3.7 - 5.9 mm or 2.5 - 6 mm²	
211-114	1000
for wire Ø 5.5 - 10 mm or 10 - 25 mm²	
211-115	1000

Item-Specific Accessories

Markers on roll, for thermal transfer printer, 3,000 markers per roll, 12 mm long, white **211-111** 1

Marker card, for plotter, 57 markers per card, 12 mm long, white **211-110** 18

Marking sleeve

Item No.	Pack. Unit
Marking sleeve, 23 mm long, halogene-free, for one marker, to be fitted prior to conductor termination, for wire Ø 1.6 - 3.2 mm or 0.25 - 1.5 mm²	
211-122	2000
for wire Ø 2.2 - 4.5 mm or 0.5 - 4 mm²	
211-123	2000
for wire Ø 3.7 - 5.9 mm or 2.5 - 6 mm²	
211-124	1000
for wire Ø 5.5 - 10 mm or 10 - 25 mm²	
211-125	1000

Item-Specific Accessories

Markers on roll, for thermal transfer printer, 3,000 markers per roll, 23 mm long, white **211-121** 1

Marker card, for plotter, 34 markers per card, 23 mm long, white **211-120** 30

Marking sleeve

Item No.	Pack. Unit
Marking sleeve, 23 mm long, halogene-free, for cable tie, can also be fitted after install, for one marker, for wires from 10 mm²	
211-129	1000

Item-Specific Accessories

Markers on roll, for thermal transfer printer, 3,000 markers per roll, 23 mm long, white **211-121** 1

Marker card, for plotter, 34 markers per card, 23 mm long, white **211-120** 30

Cable tie, 2.5 mm x 100 mm **807-090/101-100** 1

211 Series Accessories

TP 298+ Thermal Transfer Printer, 300 dpi print resolution **258-298** 1

Ink ribbon for wire marker, 76 mm wide x 300 m **258-150** 1

DIN A3 plotter, IP 350 (110 V/230 V) **258-350** 1

Ink pen, 0.35 mm line width **258-228** 1

WAGO disposable plotter pen, 0.35 mm line width **258-328** 1

Carrier plate for marker cards for IP350 plotter **258-370** 1

Self-Laminating Labels for Cable Marking
Wire Marker for Thread-On Mounting

Labels on DIN A4 sheets	Labels on roll	Wire marker for thread-on mounting

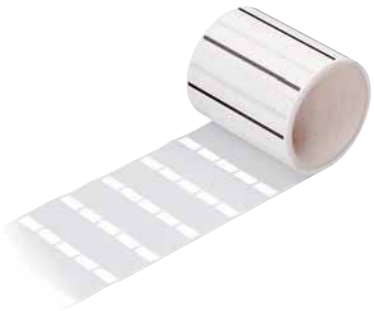

Item No.	Pack. Unit	Item No.	Pack. Unit	Item No.	Pack. Unit
Labels on DIN A4 sheets,		**Labels on roll,**		**Wire marker for thread-on mounting,**	
for laser printer		for thermal transfer printer		for 0.75 - 1.5 mm²,	
Marking surface: S = 9 mm B = 17 mm L = 35 mm,		Marking surface: S = 8 mm B = 18 mm L = 35 mm,		2,000 markers per roll	
for max. cable diameter 8 mm,		for max. cable diameter 9 mm,			
70 labels per sheet		9,000 labels per roll			
211-150	20	**211-155**	1	white **211-161**	1
Marking surface: S = 13 mm B = 21 mm L = 56 mm,		Marking surface: S = 13 mm B = 23 mm L = 51 mm,		**Wire marker for thread-on mounting,**	
for max. cable diameter 14 mm,		for max. cable diameter 12 mm,		for 2.5 - 6 mm²,	
32 labels per sheet		5,000 labels per roll		2,000 markers per roll	
211-151	25	**211-156**	1	white **211-162**	1

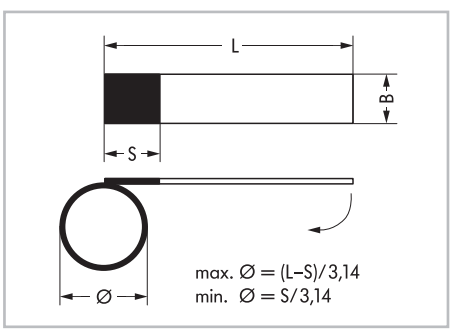

Dimensions of self-laminating label (in mm)

Self-laminating labels are supplied on roll for thermal transfer printers.

Wire marker for thread-on mounting

Markers, Cable Marking and Lables

Cable Marking

Cable Marking

Label Rolls and Type Plates

Similiar to picture

	Item No.	Pack. Unit
Marker for marking sleeve		
12 x 4 mm		
2,500 pieces per roll		
white	**211-811**	1
Marking sleeve		
Sleeve length: 12 mm		
500 pcs		
for 1.4–5 mm wire diameter		
transparent	**211-812**	1
for 5–11 mm wire diameter		
transparent	**211-813**	1
Marker for marking sleeve		
23 x 4 mm		
2,500 pieces per roll		
white	**211-821**	1
Marking sleeve		
Sleeve length: 23 mm		
500 pcs		
for 1.4–5 mm wire diameter		
transparent	**211-823**	1
200 pcs		
for 5–11 mm wire diameter		
transparent	**211-824**	1
Marking sleeve		
Sleeve length: 23 mm		
Mounting via cable tie		
200 pcs		
transparent	**211-829**	1

	Item No.	Pack. Unit
Cable tie marker		
500 pieces per roll		
25 x 20 mm		
25 x 10 mm write-on surface		
white	**211-835**	1
800 pieces per roll		
Inner wrap (write-on surface on the inner side)		
117.5 x 15 mm		
100 x 15 mm write-on surface		
white	**211-836**	1
Self-laminating labels (no illustration)		
1,000 pieces per roll		
9 x 18 mm write-on surface		
white	**211-855**	1
Self-laminating labels (no illustration)		
1,000 pieces per roll		
15 x 22 mm write-on surface		
white	**211-856**	1
500 pieces per roll		
18 x 14 mm write-on surface		
white	**211-857**	1
Wire marker for thread-on mounting		
1,000 pieces per roll		
0.75 ... 1.5 mm²		
white	**211-861**	1
2.5 ... 6 mm²		
white	**211-862**	1
6 ... 16 mm²		
white	**211-863**	1

	Item No.	Pack. Unit
Label roll		
Polyester, self-adhesive		
3,000 labels per roll		
15 x 6 mm		
white	**210-805**	1
yellow	**210-805/000-002**	1
15 x 9 mm		
white	**210-806**	1
yellow	**210-806/000-002**	1
20 x 8 mm		
white	**210-807**	1
yellow	**210-807/000-002**	1
9.5 x 25 mm		
white	**210-808**	1
5 x 35 mm		
white	**210-810**	1
Type plates		
Polyester		
500 markers per roll		
44 x 99 mm		
white	**210-801**	1
silver	**210-802**	1
44 x 99 mm		
white	**210-803**	1
silver	**210-804**	1
Label roll		
Fabric, self-adhesive		
3,000 labels per roll		
20 x 7 mm		
white	**210-811**	1
yellow	**210-811/000-002**	1

Lables and Push-Button Markers

Continuous Labels

	Item No.	Pack. Unit
Continuous labels		
Polyester, self-adhesive		
9 lengths at 25 m		
Width: 2.3 mm		
white	**210-831**	1
Width: 3 mm		
white	**210-832**	1
5 lengths at 25 m		
Width: 5 mm		
white	**210-834**	1
Width: 6 mm		
white	**210-833**	1

Push-Button Markers

	Item No.	Pack. Unit
Push-button markers		
semi-permanent adhesive		
1000 markers per roll		
26.5 x 18 mm		
silver	**210-850**	1
Plastic cover		
100 covers		
26.5 x 18 mm		
transparent	**210-851**	1
Push-button markers		
semi-permanent adhesive		
1000 markers per roll		
27.5 x 17.5 mm		
silver	**210-856**	1
Plastic cover		
100 covers		
27.5 x 17.5 mm		
transparent	**210-857**	1
Push-button markers		
semi-permanent adhesive		
1000 markers per roll		
22 x 22 mm		
silver	**210-858**	1
Plastic cover		
100 covers		
22 x 22 mm		
transparent	**210-859**	1
Push-button markers		
semi-permanent adhesive		
1000 markers per roll		
27 x 27 mm		
silver	**210-860**	1
Plastic cover		
100 covers		
27 x 27 mm		
transparent	**210-861**	1

Push-Button Markers

	Item No.	Pack. Unit
Push-button markers		
semi-permanent adhesive		
1000 markers per roll		
27 x 12.5 mm		
silver	**210-862**	1
Plastic cover		
100 covers		
27 x 12.5 mm		
transparent	**210-863**	1
Push-button markers		
permanent adhesive		
350 markers per roll		
27 x 19 mm		
silver	**210-852**	1
Universal push-button frame		
for 210-852 and 210-855		
100 pcs per bag		
27 x 19 mm		
black	**210-853**	1
Push-button markers		
permanent adhesive		
350 markers per roll		
27 x 18 mm		
silver	**210-855**	1
Label roll DD (device designation)		
Polyester		
500 labels per roll		
28 x 28 mm		
175 µm thick		
silver	**210-854**	1

Carrier Rails

Steel carrier rail acc. to EN 60715

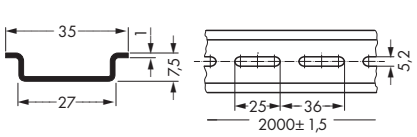

Item No.	Pack. Unit
Steel rail, I_N 76 A (referred to a length of 1 m)	
35 x 7.5 mm, 1 mm/0.039 in thick, 2 m long, unslotted	
210-113	10
Hole width 25 mm; hole spacing 36 mm, slotted	
210-112	10
Hole width 18 mm; hole spacing 25 mm, slotted	
210-115	1

Steel carrier rail

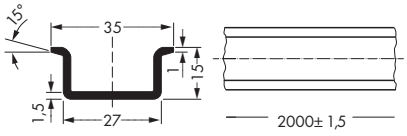

Item No.	Pack. Unit
Steel rail, I_N 125 A (referred to a length of 1 m)	
35 x 15 mm, 1.5 mm/0.059 in thick, 2 m long, unslotted	
210-114	10
Steel rail, I_N 125 A (referred to a length of 1 m)	
35 x 15 mm, 1.5 mm/0.059 in thick, 2 m long, slotted	
210-197	10

Steel carrier rail acc. to EN 60715

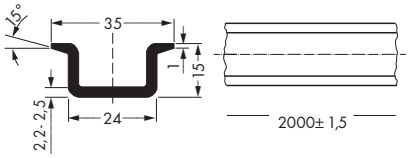

Item No.	Pack. Unit
Steel rail, I_N 125 A (referred to a length of 1 m)	
35 x 15 mm, 2.3 mm/0.091 in thick, 2 m long, unslotted	
210-118	10

Steel carrier rail galvanized

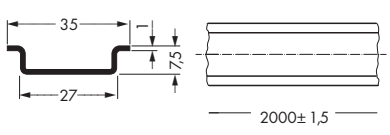

Item No.	Pack. Unit
Steel rail,	
35 x 7.5 mm, 1 mm/0.039 in thick, 2 m long, unslotted	
210-505	1
35 x 7.5 mm, 1 mm/0.039 in thick, 2 m long, slotted	
210-504	1
35 x 15 mm, 1.5 mm/0.059 in thick, 2 m long, unslotted	
210-506	1
35 x 15 mm, 1.5 mm/0.059 in thick, 2 m long, slotted	
210-508	1

Copper carrier rail

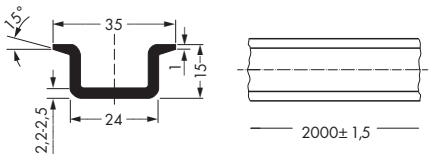

Item No.	Pack. Unit
Copper carrier rail, I_N 309 A (referred to a length of 1 m)	
35 x 15 mm, 2.3 mm/0.091 in thick, 2 m long, unslotted	
210-198	10

Aluminum carrier rail

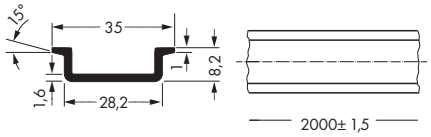

Item No.	Pack. Unit
Aluminum carrier rail, I_N 76 A (referred to a length of 1 m)	
35 x 8.2 mm, 1.5 mm/0.059 in thick, 2 m long, unslotted	
210-196	20

Accessories for Carrier Rails

End stop for DIN 35 rail End stop width 6 mm / 0.236 in	Angled support bracket	Rail end cap, for DIN 35 rail (7.5 mm/0.29 in high)

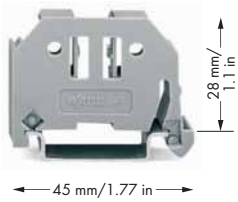

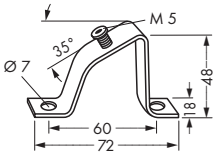

Item No.	Pack. Unit	Item No.	Pack. Unit	Item No.	Pack. Unit
End stop, for DIN 35 rail		**Angled support bracket,**		**Rail end cap,**	
6 mm/0.236 in wide		without screw		for DIN 35 rail (7.5 mm/0.29 in high)	
249-116	100 (4 x 25)	**210-148**	10	**209-109**	50
End stop, for DIN 35 rail		**Screw M 5 x 8**			
249-117	50 (2 x 25)	**210-149**	100		

Snap on - That's it!
Assembling the WAGO screwless end stops is as simple and quick as snapping a WAGO railmounted terminal block onto the rail.
Without any tools!
This way rail-mounted terminal blocks are safely secured at low cost against any mouvement on all carrier rails DIN 35 acc. to DIN EN 50022 (35 x 7.5 mm; 35 x 15 mm).
Entirely without screws!
The „secret" of the excellent tight fit lies in the two small clamping plates which keep the end stop in position, even if the rails are mounted vertically.
Simply snap on - and forget!

In addition, costs are considerably reduced when using large numbers of end stops.
A further advantage is that three marker receptacles for all WAGO marker systems for rail-mount terminal blocks and a snap-in hole for WAGO adjustable height group marker carriers offer individual marking possibilities.

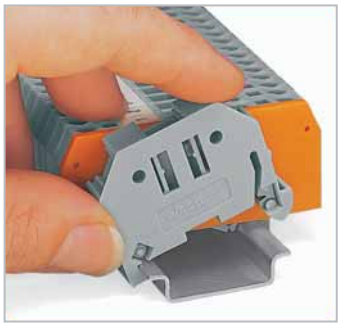

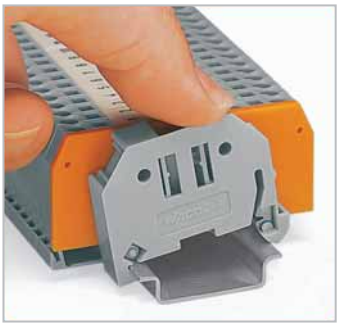

Snap on ...

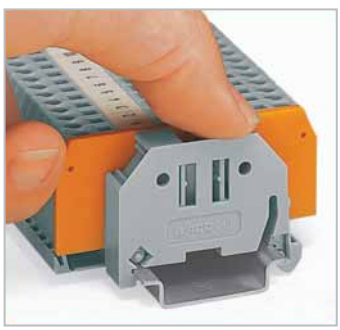

... that's it!!

Operating tool

Operating tool with partially insulated shaft for optimum handling of terminal blocks	Operating tool with partially insulated shaft – Set –	Operating tool with partially insulated shaft, short for optimum handling of terminal blocks

Item No.	Pack. Unit	Item No.	Pack. Unit	Item No.	Pack. Unit
Operating tool, with partially insulated shaft,		Operating tool, with partially insulated shaft,		**Operating tool, type 1, short, straight blade**	
type 1, blade (2.5 x 0.4) mm		– Set –		**(2.5 x 0.4) mm**, with partially insulated shaft	
210-719	1	**210-722**	1	**210-647**	1
Operating tool, with partially insulated shaft,				**Operating tool, type 2, short, straight blade**	
type 2, blade (3.5 x 0.5) mm				**(3.5 x 0.5) mm**, with partially insulated shaft	
210-720	1			**210-657**	1
Operating tool, with partially insulated shaft,				**Operating tool, type 1, short, angled blade**	
type 3, blade (5.5 x 0.8) mm				**(2.5 x 0.4) mm**, with partially insulated shaft	
210-721	1			**210-648**	1
				Operating tool, type 2, short, angled blade	
				(3.5 x 0.5) mm, with partially insulated shaft	
				210-658	1

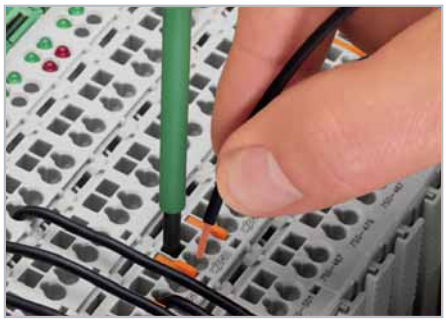

Wiring example showing WAGO-I/O-SYSTEM 750

The operating tool are particularly appropriate for the operation of front-entry terminal blocks and connectors. (The picture shows the WAGO-I/O-SYSTEM 750)

Cable Strippers

Cable stripper for round cables with an outer diameter from 2.5 mm to 11 mm Ø	Cable stripper for round cables with an outer diameter from 4.5 mm to 40 mm Ø	

Item No.	Pack. Unit
Cable stripper for round cables with an outer diameter from 2.5 mm to 11 mm Ø	
206-171	1

Item No.	Pack. Unit
Cable stripper for round cables with an outer diameter from 4.5 mm to 40 mm Ø	
206-174	1

Item No.	Pack. Unit
Spare blade for 2.5 mm to 11 mm Ø	
206-170	1

Item No.	Pack. Unit
Spare blade for 4.5 mm to 40 mm Ø	
206-173	1

206-171 Cable Stripper:

- 10-position adjustment wheel ensures repeatable stripping results
- Fine adjustability via 10-position blade cutting depth adjustment
- Strips the sheath from multi-core and fiber optic cables up to 11 mm/0.43 inch diameter
- Safe and easy to use through closed stripping cavity

206-174 Cable Stripper:

- Safe and easy to use: Three locking positions for circular, longitudinal and spiral cuts
- High cable stripping capacity of up to 40 mm/1.57 inch diameter
- Well balanced, ergonomic design features rests for thumb, index and pinky fingers to ease raising of the cable retention hook
- Replacement blades can be stored within the tool body

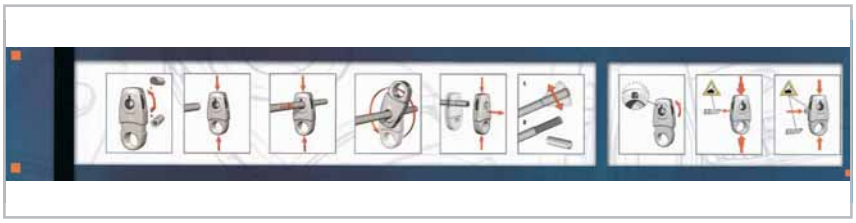

Handling instructions for 206-171 cable stripper

Handling instructions for 206-174 cable stripper

Wire Strippers

Quickstrip 10 wire stripper 0.02 mm² ... 10 mm²/AWG 28 ... 8 "stranded" (6 mm²/AWG 10 "solid") Wire cutter up to 10 mm²/AWG 8 "stranded" (1.5 mm²/AWG 16 "solid")	Quickstrip 16 wire stripper 4 mm² ... 16 mm² Wire cutter up to 10 mm²/AWG 12 ... 6 "stranded" (1.5 mm²/AWG 16 "solid")	

Item No.	Pack. Unit	Item No.	Pack. Unit	
Quickstrip 10 wire stripper		**Quickstrip 16 wire stripper**		
206-124	1	**206-125**	1	
Item No.	**Pack. Unit**	**Item No.**	**Pack. Unit**	
Standard blade cassette		**Blade cassette 16 mm²**		
0.02 mm² ... 10 mm²/AWG 34 ... 8		4.0 mm² ... 16 mm²/AWG 12 ... 6		
206-126	1	**206-128**	1	
"V" blade cassette				
0.02 mm² ... 4 mm²/AWG 34 ... 12 for PTFE				
206-127	1			

- Automatic adjustment to wire size.
- No damage to wire strands.
- Gripping pressure of jaws adjusts automatically to wire insulation diameter.
- Full cycle strip - jaws open after stripping, ensures no nicked strands.
- Exact strip length may be set by sliding of red setting stop.
- Replaceable stripping jaw assembly.
- Self-sharpening, fully protected wire cutter, also replaceable.*
- Glass fiber reinforced polyamide tool body.

* for Microstrip

Cutting of wire.

Stripping of wire.

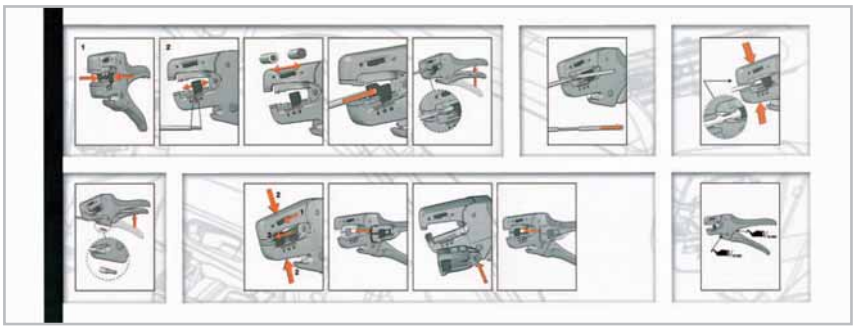

Operating instructions are enclosed in the packaging.

Cable Cutter and Crimping Tools

Cable cutter acc. to VDE for copper and aluminum wires up to 35 mm²/AWG 2 Weight 200 g	**"Variocrimp 4" Crimping Tool 0,25 mm² - 4 mm² / AWG 22 - 12 Weight 400.5 g**	**"Variocrimp 16" Crimping Tool 6 mm² - 16 mm² / AWG 10 - 6 Weight 579.5 g**

Item No.	Pack. Unit	Item No.	Pack. Unit	Item No.	Pack. Unit
Cable cutter		**"Variocrimp 4" crimping tool**, for insulated and		**"Variocrimp 16" crimping tool,** for insulated and	
206-118	1	uninsulated ferrules, crimping range of 0.25 – 4 mm²		uninsulated ferrules, crimping range of 6 – 16 mm²	
		206-204	1	**206-216**	1

Cutting

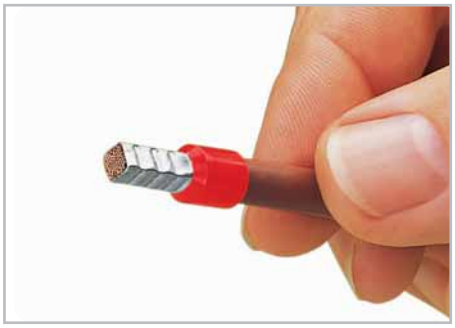

A perfect gastight crimp, both electrically and mechanically reliable.

Application notes

- With "Variocrimp 4," the built-in crimping pressure control automatically adjusts force to the conductor cross section used.
- With "Variocrimp 16," it is necessary to select the wire gauge on the tool before crimping.
- Only one crimping station is needed to handle the specified conductor size range.
- Uniform, compact crimping on all four sides for high conductor retention.
- No need to center the conductor into the ferrule.
- Conductor and ferrule insertion possible from both sides (for left- and right-handers).
- Built-in ratchet mechanism ensures gas-tight crimp connection.
- Crimping tools open automatically after crimping operation is complete.
- Ergonomical handles.

What is a "gas-tight" connection?

In a gas-tight connection, the conductor and the ferrule are compressed together, eliminating all spaces. Under normal atmospheric conditions, neither a liquid nor a gaseous medium can penetrate into the crimped connection.
Oxidation between crimped single conductors is prevented, ruling out nearly any increase in the crimped connection resistance. In some exceptional cases, minute, isolated spaces may be present. These can be considered to be closed off on account of the twisted wires, however.
Inadequate crimping can allow the conductor to be pulled out of the connection. Hollow spaces also remain in which oxidation can form. Oxidation leads to an increase in contact resistance.
Elevated resistance is detrimental for signal transmission, as the signal flow is damped (weakened), and for power transmission, as power loss and, hence a temperature increase due to contact (risk of fire) can result.
Crimping tools with built-in ratchets are recommended, such as the WAGO Variocrimp tools. These tools only open after the crimping process has been fully completed. Space-saving crimping from all four sides is ideal for spring clamp termination.
Cross section data for ferruled conductors indicated for WAGO products is based on this crimping method.

Test and Measurement Tools

Profi LCD+	Profi LED+

Item No.	Pack. Unit
Profi LCD+,	
2-pole voltage tester with LCD display,	
removable test probes, 4 mm Ø	
Measuring range: 6 V ... 1000 V AC/DC	
Degree of protection: IP65	
Resistance measurement: up to 2000 Ω	
206-807	1

Item No.	Pack. Unit
Profi LED+,	
2-pole voltage tester with LED display,	
removable test probes, 4 mm Ø	
Measuring range: 6 V ... 1000 V AC/DC	
Degree of protection: IP65	
Resistance measurement: up to 2000 Ω	
206-806	1

Item-Specific Accessories

Spare test probes,

4 mm Ø (2 pieces)
206-808 25

Item-Specific Accessories

Spare test probes,

4 mm Ø (2 pieces)
206-808 25

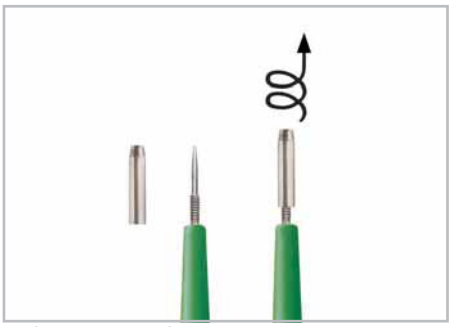

Profi LCD+ and Profi LED+
- Improved socket contact via 4 mm Ø test probes
- Removable test probes for small test ports (suitable for all WAGO terminal blocks)

Additional product features for Profi LCD+:
- Automatic measurement range selection
- Single-pole phase testing AC >100 V
- Two-pole sequence testing (R and L)
- Continuity testing
- FI/RCD testing (30 mA) via buttons
- One-hand operation for SCHUKO and CEE sockets
- LED torch lamp function
- Automatic backlight
- Auto power-Off function
- CAT IV 1000 V
- IEC/EN 61243-3 (DIN VDE 0682-401)

Additional product features for Profi LED+:
- Automatic measurement range selection
- Single-pole phase testing AC >100 V
- Two-pole sequence testing (R and L)
- Continuity testing
- FI/RCD testing (30 mA) via buttons
- One-hand operation for SCHUKO and CEE sockets
- LED torch lamp function
- CAT IV 1000 V
- TÜV/GS tested and approved
- IEC/EN 61243-3 (DIN VDE 0682-401)

Test and Measurement Tools and Testboy

Multi-Tester	Clamp-Multi-Tester	Testboy

Item No.	Pack. Unit	Item No.	Pack. Unit	Item No.	Pack. Unit
Multi-Tester,		**Clamp-Multi-Tester,** digital clamp meter		**Testboy,** with integrated flashlight	
Digital multimeter with contact-less voltage tester,		DC and AC current up to 600 A		Voltage range: 12 - 1000 V AC	
Includes: carrying case		- True RMS and min./max. value measurement			
Measuring range: AC/DC 600 V AC/DC 10 A		- DC and AC voltage up to 600 V			
Resistance measurement: up to 20 MΩ		- Manual or automatic selection of measurement range			
		- Resistance up to 60 MΩ, Capacitance measurement			
		- Acoustical continuity test			
		- Diode test, Data hold function			
		- Large LCD with backlight, LED measuring point lighting			
		- CAT III 600 V overvoltage protection, IEC/EN 61010-1			
		(DIN VDE 0411)			
		- Including batteries			
		- measurement leads and carrying bag			
206-810	1	**206-816**	1	**206-804**	1
Item-Specific Accessories					
Replacement test leads,					
red/black					
206-811	1				

Additional product features for Multi Tester:
- Contact-less voltage test AC >100 V (optical and acoustical)
- Resistance measurement up to 20 MΩ
- Acoustical continuity test
- Diode test
- Data hold function
- Auto power-off function
- LED torch lamp function
- CAT IV 600 V
- TÜV/GS tested and approved
- IEC/EN 61010-1 (DIN VDE 0411)

Voltage testing in switchgear cabinet

Current measurement in switchgear cabinet

A device that will reliably detect AC voltage in cables, sockets, fuses, switches, outlets, etc.

Testboy can detect the following:
- live conductors
- cable breaks
- blown fuses (in cartridge or holder)
- defective switches
- defective lamps

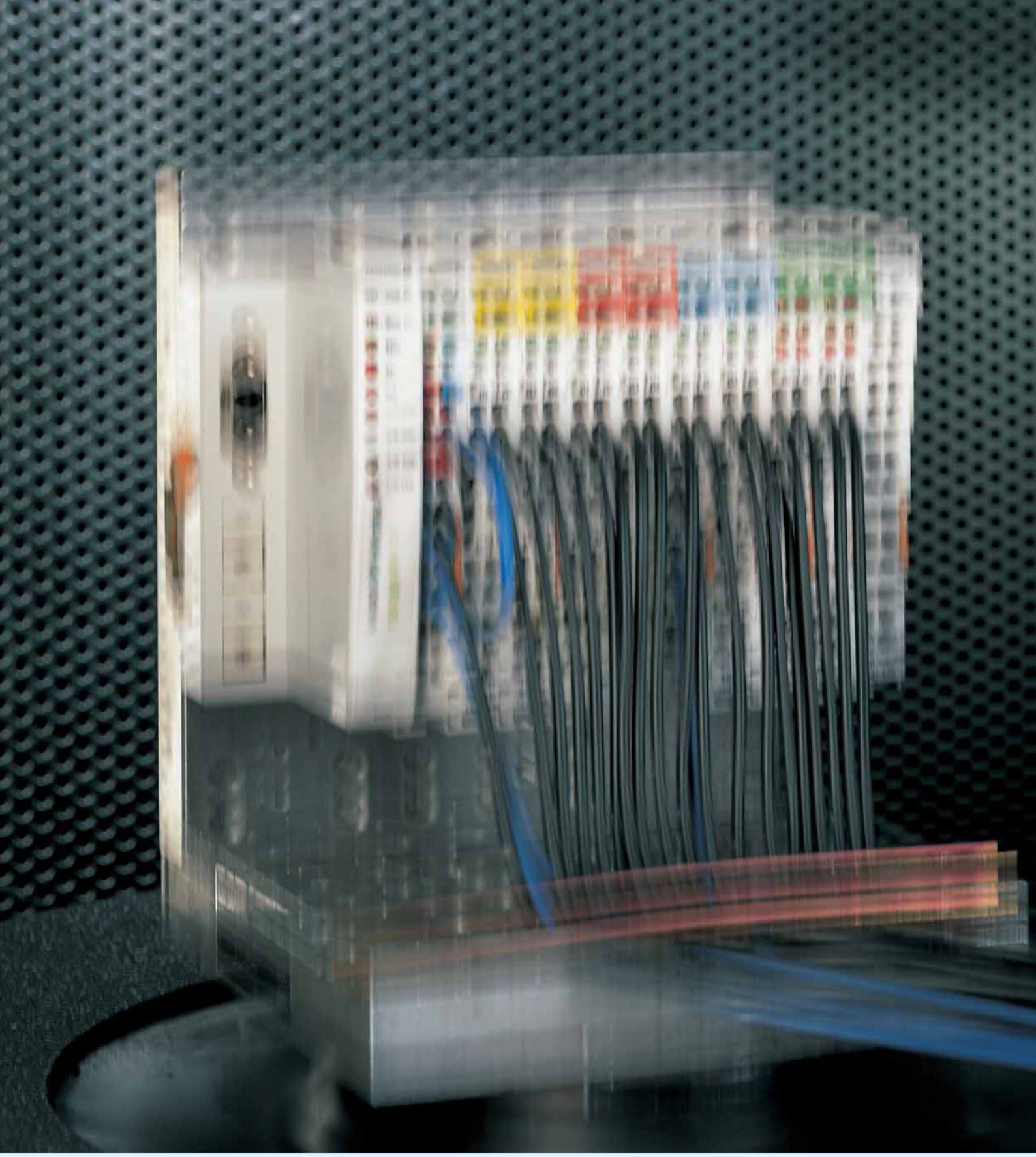

Technical Section

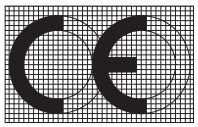

	Page
Technical Support	694
CE Marking	696
General Technical Information for Electrical Equipment in Hazardous Environments	697
Electromagnetic Compatibility and Mechanical Strength (Industrial and Residential Areas)	698
Electromagnetic Compatibility and Mechanical Strength (Ship Building Area)	699
Specifications and Test Results	700
Laboratory E-Technik	704
WAGO – Seminars	706

Product Support From

Consulting Services

- Selection of the fieldbus
- Use of components
- Combination of components
- Cooperation with other suppliers

- Contact:

  Your national WAGO company or distributor.

The Very Beginning...

Experienced

- Trained staff
- PLC & PC control
- Multiple fieldbuses
- Programming languages
- Projects:

  Automotive industry
  Machine building
  Chemical industry
  Food processing
  Building automation
  Process engineering
  Process control
  and many more

We will help you

- Product documentation
- Manuals
- Application notes
- By telephone
- On-site

CE Marking and EC Directives

CE conformity marking:

The CE conformity marking consists of the characters "CE", with the following script:

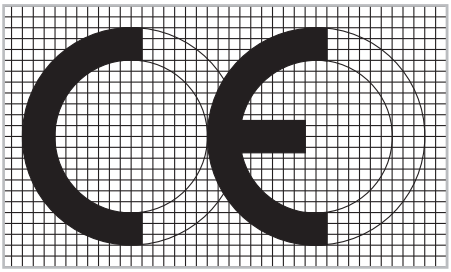

Communauté Européenne (European Community)

The CE marking shall be affixed to the electrical equipment, or if that is not possible, to the smallest packing unit. With the CE marking, manufacturers attest conformity of their products to the relevant directives.

In addition to the CE marking, the manufacturer provides an EC "Declaration of Conformity" for the product. This EC "Declaration of Conformity" must be retained and submitted to a national surveillance authority upon request. EC directives are binding legal regulations of the European Community. Their goal is the harmonization of legal and administrative regulations in the various EC member states, in order to prevent trade obstructions due to different national regulations.
In order to "market" a product, it must comply with the relevant directives. The product may be subject to several directives, e.g. the EMC and the low voltage directives.

The **EC directives** are legally binding specifications of the European Union. Their aim is the alignment of legal and administrative specifications in the various EC member states, in order to prevent trading hindrances arising from different national specifications.
In order to launch a product on the market it has to comply with the relevant directives. Several directives may apply to a product, for example the EMC and the low voltage directives.

Low Voltage Directive
The safety of electrical equipment is guaranteed by the Low Voltage Directive. This directive covers 'complete' electrical equipment designed for use with a voltage rating of between 50 and 1000V for alternating current and between 75 and 1500V for direct current. Products falling within the scope of the Low Voltage Directive that are designed in such a way that they can be used in other electrical devices and whose safety, for the most part, is dependant on how these components were built into the end product and what features the end product has are defined as basic components in accordance with the Low Voltage Directive.* The Low Voltage Directive doesn't apply to basic components.

EMC Directive
The EMC Directive implies that a product must meet the limits of the radiated electromagnetic disturbance and also requires that a product must be immune to electromagnetic interference. Electromagnetic passive components or components with no direct function, like resistors, diodes, capacitors, switching relays or cables (in the form of passive printed circuit boards) are not considered as apparatus within the meaning of the EMC Directive.

Machinery Directive
The Machinery Directive does not apply to WAGO products.

Explosive Atmospheres Directive (ATEX)
Directive for devices and protective systems intended for use in hazardous locations.

Radio Equipment Directive
A device or relevant component thereof, capable of communication by emitting and/or receiving radio waves utilizing the spectrum allocated to terrestrial/space radio communication, falls within the scope of the Radio Equipment Directive. As such, these devices and components are tested and labeled accordingly. This label implicitly includes both Low Voltage and EMC Directives, since the Radio Equipment Directive also encompasses the safety targets for both of these directives.

General Technical Information for Electrical Equipment in Hazardous Environments

Harzardous Environments
Hazardous environments are areas in which the atmosphere may become explosive. Explosive atmosphere is defined as a mixture of ignitable substances in the form of gases, vapors or mixtures with air under atmospheric conditions in critically mixed ratios such that excessive high temperature, arcs or sparks may cause an explosion.

DIN EN 1127-1 and all other related standards that are commonly known divide up hazardous areas according to the likelihood of the occurrence of an explosive atmosphere into the following zones:

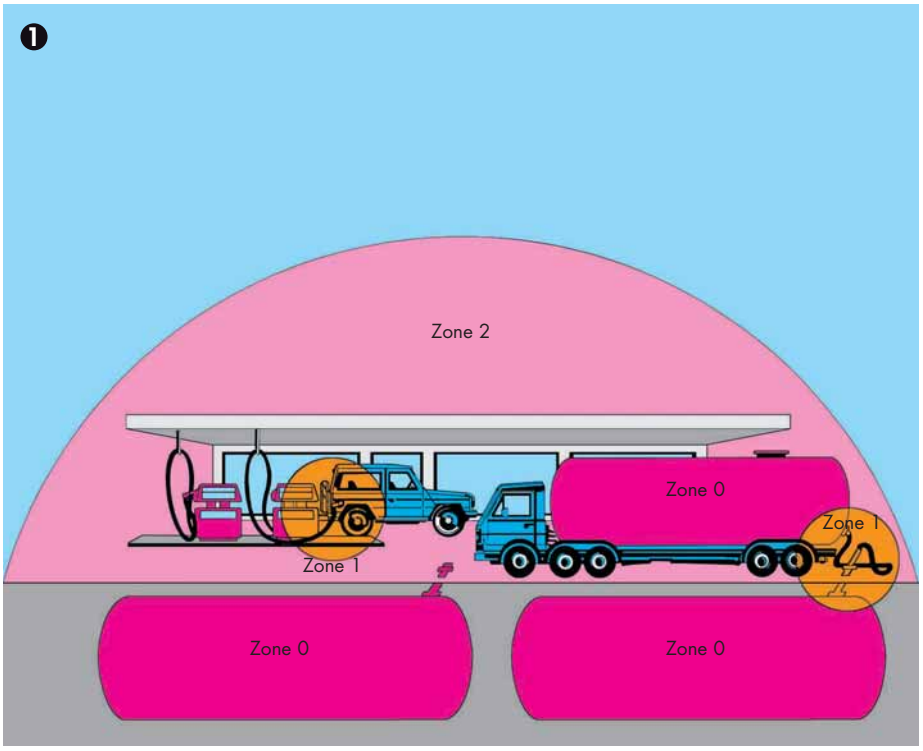

❶ Hazardous environments as a result of combustible gases, vapors or mist.

Zone 0:
Area in which an explosive gas/air mixture is continuously present or present for long periods.

Zone 1:
Area in which an explosive atmosphere can occur during normal operation.

Zone 2:
Area in which an explosive atmosphere is unlikely to occur under normal operation and if it does it will be for a short period.

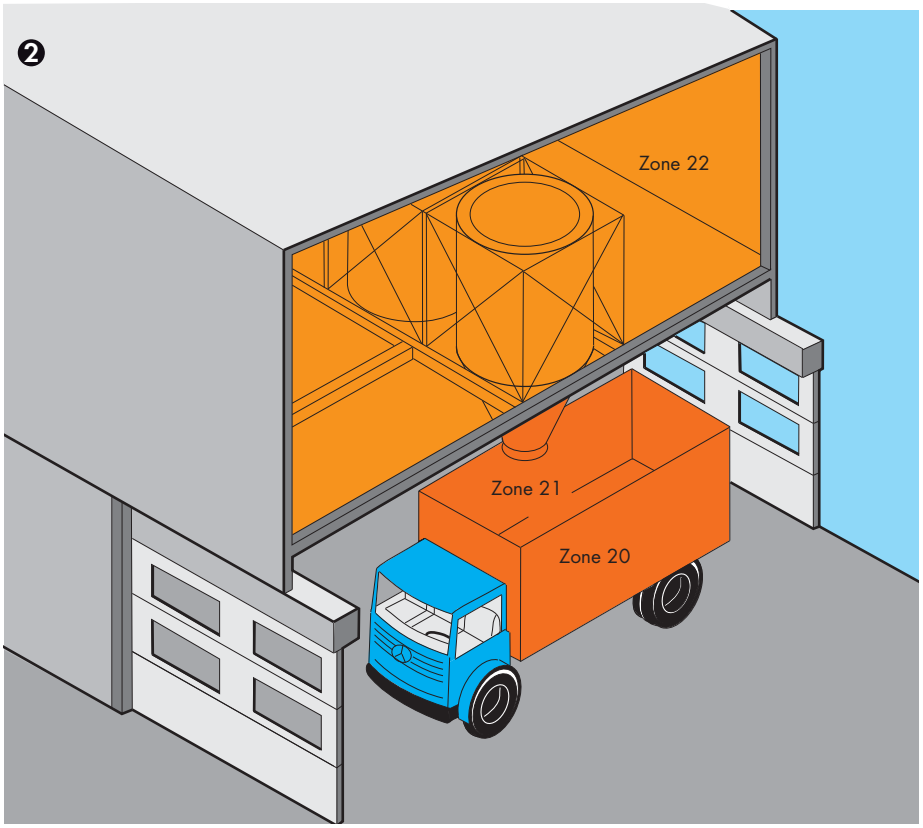

❷ Hazardous areas caused by combustible dust

Zone 20:
Area in which an explosive dusty atmosphere is present "permanently", for "long periods" or "frequently" and in which deposits of combustible dust of unknown or excessive thickness may be formed. Dust deposits alone are not grounds for classification as Zone 20.

Zone 21:
Area in which an explosive dusty atmosphere is present "occasionally" under normal operating conditions and in which deposits or layers of combustible dust can generally be present.

Zone 22:
Area in which an explosive dusty atmosphere is not likely to occur during normal operation and, if it occurs, will only exist for a "short period", or in which accumulations or layers of combustible dust are present.

Please refer to the manuals for more information on explosion protection.

Electromagnetic Compatibility and Mechanical Strength (Industrial and Residential Areas)

Immunity to interference for industrial areas acc. to EN 61000-6-2

Test Specification		Test Values	Evaluation Criteria *)
EN 61000-4-2	ESD	4 kV/8 kV (contact/air)	B
EN 61000-4-3	electromagnetic fields	10 V/m: 80 MHz ... 1 GHz	A
		3V/m: 1.4 GHz ... 2.0 GHz	A
		1V/m: 2.0 GHz ... 2.7 GHz	A
EN 61000-4-4	burst	1 kV/2 kV (data/supply)	B
EN 61000-4-5	surge	Data: - / 1 kV (line : line / line : earth)	B
		DC supply: 0.5 kV / 0.5 kV (line : line / line : earth)	B
		AC supply: 1 kV / 2 kV (line : line / line : earth)	B
EN 61000-4-6	RF distrurbances	10 V/m, 80 % AM (0.15 MHz ... 80 MHz)	A
EN 61000-4-8	Magnetic field	30 A/m, 50/60Hz	A
*)	Criteria A: The device must work in accordance with the regulations during and after the test. Criteria B: The device must work in accordance with the regulations after the test.		

Emission of interference for residential areas acc. to EN 61000-6-3

Test Specification		Limit Values/ Quasi Peak	Frequency Range	Distance
EN 55016-2-1	AC supply, conducted	66 ... 56 dB(µV)	150 kHz ... 500 kHz	
		56 dB(µV)	500 kHz ... 5 MHz	
		60 dB(µV)	5 MHz ... 30 MHz	
EN 55016-2-1	DC supply/data line	79 dB(µV)	150 kHz ... 500 kHz	
	conducted	73 dB(µV)	500 kHz ... 30 MHz	
EN 55016-2-3	radiated	30 dB(µV/m)	30 MHz ... 230 MHz	10 m
		37 dB(µV/m)	230 MHz ... 1 GHz	10 m
EN 55022	Telecommunications/	84 ... 74 dB(µV)	150 kHz ... 500 kHz	
	Mains connection, conducted	74 dB(µV)	500 kHz ... 30 MHz	

Emission of interference for industrial areas acc. to EN 61000-6-4

Test Specification		Limit Values/ Quasi Peak	Frequency Range	Distance
EN 55016-2-1	AC supply, conducted	79 dB(µV)	150 kHz ... 500 kHz	
EN 55016-1-2		73 dB(µV)	500 kHz ... 30 MHz	
EN 55016-2-3	radiated	40 dB(µV/m)	30 MHz ... 230 MHz	10 m
		47 dB(µV/m)	230 MHz ... 1 GHz	10 m
EN 55022	Telecommunications/	97 ... 87 dB(µV)	150 kHz ... 500 kHz	
	Mains connection, conducted	87 dB(µV)	500 kHz ... 30 MHz	

Mechanical strength acc. to EN 61131-2

Test Specification		Frequency Range	Limit Values
IEC 60068-2-6	vibration	5 Hz ≤ f < 9 Hz	1.75 mm amplitude (permanent)
			3.5 mm amplitude (short term)
		9 Hz ≤ f < 150 Hz	0.5 g (permanent)
			1 g (short term)
		Note on vibration test:	
		a) Frequency change: max. 1 octave/minute	
		b) Vibration direction: 3 axes	
IEC 60068-2-27	shock		15 g
		Note on shock test:	
		a) Type of shock: half sine	
		b) Shock duration: 11 ms	
		c) Shock direction: 3x in positve and 3x in negative direction for each of the three mutually perpendicular axes of the test specimen	

Electromagnetic Compatibility and Mechanical Strength (Ship Building Area)

Immunity to interference acc. to Germanischer Lloyd

Test Specification		Test Values	Evaluation Criteria *)
IEC 61000-4-2	ESD	6 kV/8 kV (contact/air)	B
IEC 61000-4-3	electromagnetic fields	10 V/m, 80 MHz ... 2 GHz	A
IEC 61000-4-4	burst	1 kV /2 kV (data/supply)	A
IEC 61000-4-5	surge	0,5 kV /1 kV (line : line / line : earth)	A
IEC 61000-4-6	RF distrurbances	10 V, 80 % AM (0.15 ... 80 MHz)	A
Type Test	AF distrurbances (harmonic waves)	3 V, 2 W	A
Type Test	high voltage	755 V DC	-
		1500 V AC	-
*)	Criteria A: The device must work in accordance with the regulations during and after the test. Criteria B: The device must work in accordance with the regulations after the test.		

Emission of interference acc. to Germanischer Lloyd

Test Specification		Limit Values/ Quasi Peak	Frequency Range	Distance
Type Test	EMC 1, conducted	96 ... 50 dB(µV)	10 kHz ... 150 kHz	
	(allows for ship bridge	60 ... 50 dB(µV)	150 kHz ... 350 kHz	
	control applications)	50 dB(µV)	350 kHz ... 30 MHz	
Type Test	EMC 1, radiated	80 ... 52 dB(µV/m)	150 kHz ... 300 kHz	3 m
	(allows for ship bridge	52 ... 34 dB(µV/m)	300 kHz ... 30 MHz	3 m
	control applications)	54 dB(µV/m)	30 MHz ... 2 GHz	3 m
	except for:	24 dB(µV/m)	156 MHz ... 165 MHz	3 m
Type Test	EMC 2, conducted	120 ... 69 dB(µV)	10 kHz ... 150 kHz	
	(allows for machine room	79 dB(µV)	150 kHz ... 500 kHz	
	applications)	73 dB(µV)	500 kHz ... 30 MHz	
Type Test	EMC 2, radiated	80 ... 50 dB(µV/m)	150 kHz ... 30 MHz	3 m
	(allows for machine room	60 ... 54 dB(µV/m)	30 MHz ... 100 MHz	3 m
	applications)	54 dB(µV/m)	100 MHz ... 2 GHz	3 m
	except for:	24 dB(µV/m)	156 MHz ... 165 MHz	3 m

Mechanical strength acc. to Germanischer Lloyd

Test Specification		Frequency Range	Limit Values
IEC 60068-2-6	vibration (category A, C)	2 Hz ≤ f < 13,2 Hz	±1.0 mm Amplitude (permanent)
		13.2 Hz ≤ f < 100 Hz	0.7 g (permanent)
		Note on vibration test:	
		a) Frequency change: max. 1 octave/minute	
		b) Vibration direction: 3 axes	
IEC 60068-2-6	vibration (category A-D)	2 Hz ≤ f < 25 Hz	±1.6 mm Amplitude (permanent)
		25 Hz ≤ f < 100 Hz	4 g (permanent)
		Note on vibration test:	
		a) Frequency change: max. 1 octave/minute	
		b) Vibration direction: 3 axes	

Specifications and Test Results

In particular the following standards apply to the design and the application of the terminal blocks and connectors contained in this catalog:

DIN VDE 0100
Construction of high current installations with nominal voltages up to 1000V

EN 50110-1
VDE 0105-1
Operation of electrical installations

IEC 61140
EN 61140
VDE 0140-1
Protection against electric shock - Common aspects for installation and equipment

IEC 60664-1
EN 60664-1
VDE 0110-1
Insulation coordination for equipment within low-voltage systems - Part 1: Principles, requirements and tests

IEC 60204-1
EN 60204-1
VDE 0113-1
Safety of machinery - Electrical equipment of machines - Part 1: General requirements

EN 50178
VDE 0160
Electronic equipment for use in power installations

IEC 62305-1
EN 62305-1
VDE 0185-305-1
Protection against lightning - Part 1: General principles

IEC 60060-1
HD 588.1 S1
VDE 0432-1
High voltage test techniques; part 1: general specifications and test requirements

IEC 60085
EN 60085
VDE 0301-1
Electrical insulation - Thermal evaluation and designation

IEC 60529
EN 60529
VDE 0470-1
Degrees of protection provided by enclosures (IP code)

IEC 60603-1
EN 60603-1
Connectors for frequencies below 3 MHz for use with printed boards - Part 1: Generic specification: General requirements and guide for the preparation of detail specifications, with assessed quality

IEC 61984
EN 61984
VDE 0627
Connectors - Safety requirements and tests

IEC 60999-1
EN 60999-1
VDE 0609-1
Connecting devices - Electrical copper conductors; Safety requirements for screw-type and screwless-type clamping units - Part 1: General requirements and particular requirements for clamping units for conductors 0.2 mm^2 up to 35 mm^2

IEC 60617-2
EN 60617-2
Graphical symbols for diagrams - Part 2: Symbol elements, qualifying symbols and other symbols having general application

IEC 61558-1
EN 61558-1
VDE 0570-1
Safety of power transformers, power supplies, reactors and similar products - Part 1: General requirements and tests

IEC 60669-2-1
EN 60669-2-1
VDE 0632-2-1
Switches for household and similar fixed electrical installations - Part 2-1: Particular requirements - Electronic switches

IEC 60947-7-1
EN 60947-7-1
VDE 0611-1
Low-voltage switchgear and controlgear - Part 7-1: Ancillary equipment - Terminal blocks for copper conductors

IEC 60998-2-2
EN 60998-2-2
VDE 0613-2-2
Connecting devices for low-voltage circuits for household and similar purposes - Part 2-2: Particular requirements for connecting devices as separate entities with screwless-type clamping units

IEC 60947-1
EN 60947-1
VDE 0660-100
Low-voltage switchgear and controlgear - Part 1: General rules

IEC 60947-5-6
EN 60947-5-6
VDE 0660-212
Low-voltage switchgear and controlgear - Part 5-6: Control circuit devices and switching elements, DC interface for proximity sensors and switching amplifiers (NAMUR)

IEC 60439-1
EN 60439-1
VDE 0660-500
Low-voltage switchgear and controlgear assemblies - Part 1: Type-tested and partially type-tested assemblies

IEC 60555-1
EN 60555 part 1
VDE 0838-1
Disturbances in supply systems caused by household appliances and similar electrical equipment; part 1: definitions

IEC 60715
EN 60715
Dimensions of low-voltage switchgear and controlgear - Standardized mounting on rails for mechanical support of electrical devices in switchgear and controlgear installations

IEC 60950-1
EN 60950-1
VDE 0805-1
Information technology equipment - Safety - Part 1: General requirements

IEC 60127-6
EN 60127-6
VDE 0820-6
Miniature fuses - Part 6: Fuse-holders for miniature fuse-links

EN 50155
VDE 0115-200
Railway applications - Electronic equipment used on rolling stock

EN 50090-2-2
VDE 0829-2-2
Home and Building Electronic Systems (HBES) - Part 2-2: System overview - General technical requirements; German version

IEC 60099-1
EN 60099-1
VDE 0675-1
Surge arresters - Part 1: Non-linear resistor type gapped surge arresters for a.c. systems

IEC 61643-1
EN 61643-11
VDE 0675-6-11
Low-voltage surge protective devices - Part 11: Surge protective devices connected to low-voltage power systems - Requirements and tests

IEC 61643-21
EN 61643-21
VDE 0845-3-1
Low voltage surge protective devices - Part 21: Surge protective devices connected to telecommunications and signalling networks; Performance requirements and testing methods

IEC 61508-1
EN 61508-1
VDE 0803-1
Functional safety of electrical/electronic/programmable electronic safety-related systems - Part 1: General requirements

IEC 62061
EN 62061
VDE 0113-50
Safety of machinery - Functional safety of safety-related electrical, electronic and programmable electronic control systems

Interfaces - Fieldbuses

DIN 66259-1
Electrical characteristics for unbalanced double-current interchange circuits

EN 50325-1
Industrial communications subsystem based on ISO 11898 (CAN) for controller-device interfaces - Part 1: General requirements

IEC 61784-1
EN 61784-1
Industrial communication networks - Profiles - Part 1: Fieldbus profiles

IEC 61158-2
EN 61158-2
Industrial communication networks - Fieldbus specifications - Part 2: Physical layer specification and service definition

IEC 61158-6-x
EN 61158-6-x
DIN EN 61158-6-x
Industrial communication networks - Fieldbus specifications - Part 6-x

Explosion Protection

IEC 60079-0
EN 60079-0
VDE 0170-1
Electrical apparatus for explosive gas atmospheres - Part 0: General requirements

IEC 60079-7
EN 60079-7
VDE 0170-6
Explosive atmospheres - Part 7: Equipment protection by increased safety "e"

IEC 60079-11
EN 60079-11
VDE 0170-7
Explosive atmospheres - Part 11: Equipment protection by intrinsic safety "i"

IEC 60079-14
EN 60079-14
VDE 0165-1
Explosive atmospheres - Part 14: Electrical installations design, selection and erection

IEC 60079-15
EN 60079-15
VDE 0170-16
Electrical apparatus for explosive gas atmospheres - Part 15: Construction, test and marking of type of protection "n" electrical apparatus

IEC 61241-0
EN 61241-0
VDE 0170-15-0
Electrical apparatus for use in the presence of combustible dust - Part 0: General requirements

IEC 61241-1
EN 61241-1
VDE 0170-15-1
Electrical apparatus for use in the presence of combustible dust - Part 1: Protection by enclosures "tD"

IEC 61241-11
EN 61241-11
VDE 0170-15-11
Electrical apparatus for use in the presence of combustible dust - Part 11: Protection by intrinsic safety "iD"

Specifications and Test Results (continued)

Environmental Testing

IEC 60068-2-6
EN 60068-2-6
VDE 0468-2-6
Environmental testing - Part 2-6: Tests - Test Fc: Vibration (sinusoidal)

IEC 60068-2-27
EN 60068-2-27
Basic environmental testing procedures - Part 2: Tests; test Ea and guidance: Shock

IEC 60068-2-42
EN 60068-2-42
Environmental testing - Part 2-42: Tests - Test Kc: Sulphur dioxide test for contacts and connections

IEC 60068-2-43
EN 60068-2-43
Environmental testing - Part 2-43: Tests - Test Kd: Hydrogen sulphide test for contacts and connections

EMC Requirements

IEC 61000-6-1
EN 61000-6-1
VDE 0839-6-1
Electromagnetic compatibility (EMC) - Part 6-1: Generic standards - Immunity for residential, commercial and light-industrial environments

IEC 61000-6-2
EN 61000-6-2
VDE 0839-6-2
Electromagnetic compatibility (EMC) - Part 6-2: Generic standards - Immunity for industrial environments

IEC 61000-6-3
EN 61000-6-3
VDE 0839-6-3
Electromagnetic compatibility (EMC) - Part 6-3: Generic standards - Emission standard for residential, commercial and light-industrial environments

IEC 61000-6-4
EN 61000-6-4
VDE 0839-6-4
Electromagnetic compatibility (EMC) - Part 6-4: Generic standards - Emission standard for industrial environments

IEC 61000-3-2
EN 61000-3-2
VDE 0838-2
Electromagnetic compatibility (EMC) - Part 3-2: Limits - Limits for harmonic current emissions (equipment input current ≤ 16 A per phase)

IEC/CISPR 11
EN 55011
VDE 0875-11
Industrial scientific and medical (ISM) radio-frequency equipment - Electromagnetic disturbance characteristics - Limits and methods of measurement

IEC/CISPR 22
EN 55022
VDE 0878-22
Information technology equipment - Radio disturbance characteristics - Limits and methods of measurement

IEC/CISPR 24
EN 55024
VDE 0878-24
Information technology equipment - Immunity characteristics - Limits and methods of measurement

IEC 61326-3-1
EN 61326-3-1
VDE 0843-20-3-1
Electrical equipment for measurement, control and laboratory use - EMC requirements - Part 3-1: Immunity requirements for safety-related systems and for equipment intended to perform safety-related functions (functional safety) - General industrial applications

PLC

IEC 61131-1
EN 61131-1
Programmable controllers -
Part 1: General information

IEC 61131-2
EN 61131-2
VDE 0411-500
Programmable controllers -
Part 2: Equipment requirements and tests

IEC 61131-3
EN 61131-3
Programmable controllers -
Part 3: Programming languages

Relays

IEC 61810-1
EN 61810-1
VDE 0435-201
Electromechanical elementary relays -
Part 1: General requirements

IEC 61810-2
EN 61810-2
VDE 0435-120
Electromechanical elementary relays -
Part 2: Reliability

IEC 61810-5
EN 50205
VDE 0435-2022
Electromechanical non-specified time all-or-nothing relays - Part 5: Insulation coordination

IEC 60255-5
EN 60255-5
VDE 0435-130
Electrical relays - Part 5: Insulation coordination for measuring relays and protection equipment - Requirements and tests

UL Directives

UL 1059; ANSI 1059
Terminal blocks

UL 486E
Equipment wiring terminals for use with aluminum and/or copper conductors

UL 508
Industrial control equipment

ANSI/ISA12.12.01
Nonincendive electrical equipment for use in Class I and Class II, Division 2 and Class III, Divisions 1 and 2 hazardous (classified) locations

Ship Classifications

ABS (American Bureau of Shipping)
Steel Vessels
Part 4: Vessel Systems and Machinery

BV (Bureau Veritas)
Rules for the classification of steel ships and offshore units

DNV (Det Norsk Veritas)
Det Norsk Veritas' Rules for Classification of Ships, High Speed & Light Craft and
Det Norsk Veritas' Offshore Standards

GL (Germanischer Lloyd)
Rules for Classification and Construction
VI Additional Rules and Guidelines
7 Guidelines for the Performance of Type Test
2 Test Requirements for Electrical/Electronic Devices and Systems

LR (Lloyds Register)
Type Approval System
Test Specification Number1

RINA (Registro Italiano Navale)
Rules for the classification of ships
Part C – Machinery, systems and fire protection Ch.3, Sect.6, Table1

BSH (Federal Maritime and Hydrographic Agency)
Certificate on measurement of safe distance to the standard magnetic and steering magnetic compass in accordance with ISO R 695 and DIN EN 60945 Section 11.2

KR (Korean Register of Shipping)
List of Approved Manufacturers and Type Approved Equipment; Pt. 6, Ch. 1, Sec. 3 of the Rules for Classification of Steel Ships

NKK (Nippon Kaiji Kyokai)
Guidance for the Approval and Type Approval of Materials and Equipment for Marine Use

PRS (Polski Rejestr Statkow)
Publication No. 11/P
Enviromental Tests on Marine Equipment

Electrical Engineering Laboratory: Product Safety for Our Customers

The WAGO laboratory in Minden is an "accredited test lab for electrical and mechanical tests on terminal blocks and connectors, as well as for environment simulations."

Accreditation, as ISO/IEC 17011:2004 defines, is a third party-attestation related to a conformity assessment body conveying formal demonstration of its competence to carry out specific conformity assessment tasks.

Accreditation, according to DIN EN ISO/IEC 17025, is granted by the Deutsche Akkreditierungsstelle GmbH DAkkS (German Accreditation Office GmbH DAkkS). This national accreditation office, which was established by the German Federal Ministry for Economics and Technology (BMWi), certifies that our test laboratory is officially recognized as possessing the necessary expertise to conduct defined tests and types of tests independently and objectively.

Through obtaining the accreditation, the following objectives were achieved:

- Customer requirements
- Workflow optimization
- Clearly defined processes
- Clear organization and structure
- Greater transparency
- Consistent, high-quality laboratory testing
- Maximum traceability
- Traceable measurement results
- Sustainable quality awareness

High-voltage test

Visitor center

Conductor retention force testing

Vibration- and shock-resistance testing

DAkkS
Deutsche
Akkreditierungsstelle

Deutsche Akkreditierungsstelle GmbH

Beliehene gemäß § 8 Absatz 1 AkkStelleG i.V.m. § 1 Absatz 1 AkkStelleGBV
Unterzeichnerin der Multilateralen Abkommen
von EA, ILAC und IAF zur gegenseitigen Anerkennung

Akkreditierung

Die Deutsche Akkreditierungsstelle GmbH bestätigt hiermit, dass das Prüflaboratorium

WAGO Kontakttechnik GmbH & Co. KG
Hansastraße 27, 32423 Minden

die Kompetenz nach DIN EN ISO/IEC 17025:2005 besitzt, Prüfungen in folgenden Bereichen durchzuführen:

Elektrische und mechanische Prüfungen an Klemmen und Steckverbinder sowie Umweltsimulation

Die Akkreditierungsurkunde gilt nur in Verbindung mit dem Bescheid vom 18.12.2014 mit der Akkreditierungsnummer D-PL-19704-01 und ist gültig bis 17.12.2019. Sie besteht aus diesem Deckblatt, der Rückseite des Deckblatts und der folgenden Anlage mit insgesamt 5 Seiten.

Registrierungsnummer der Urkunde: **D-PL-19704-01-00**

Frankfurt am Main, 18.12.2014

Im Auftrag Dipl.-Ing. (FH) Ralf Egner
Abteilungsleiter

Siehe Hinweise auf der Rückseite

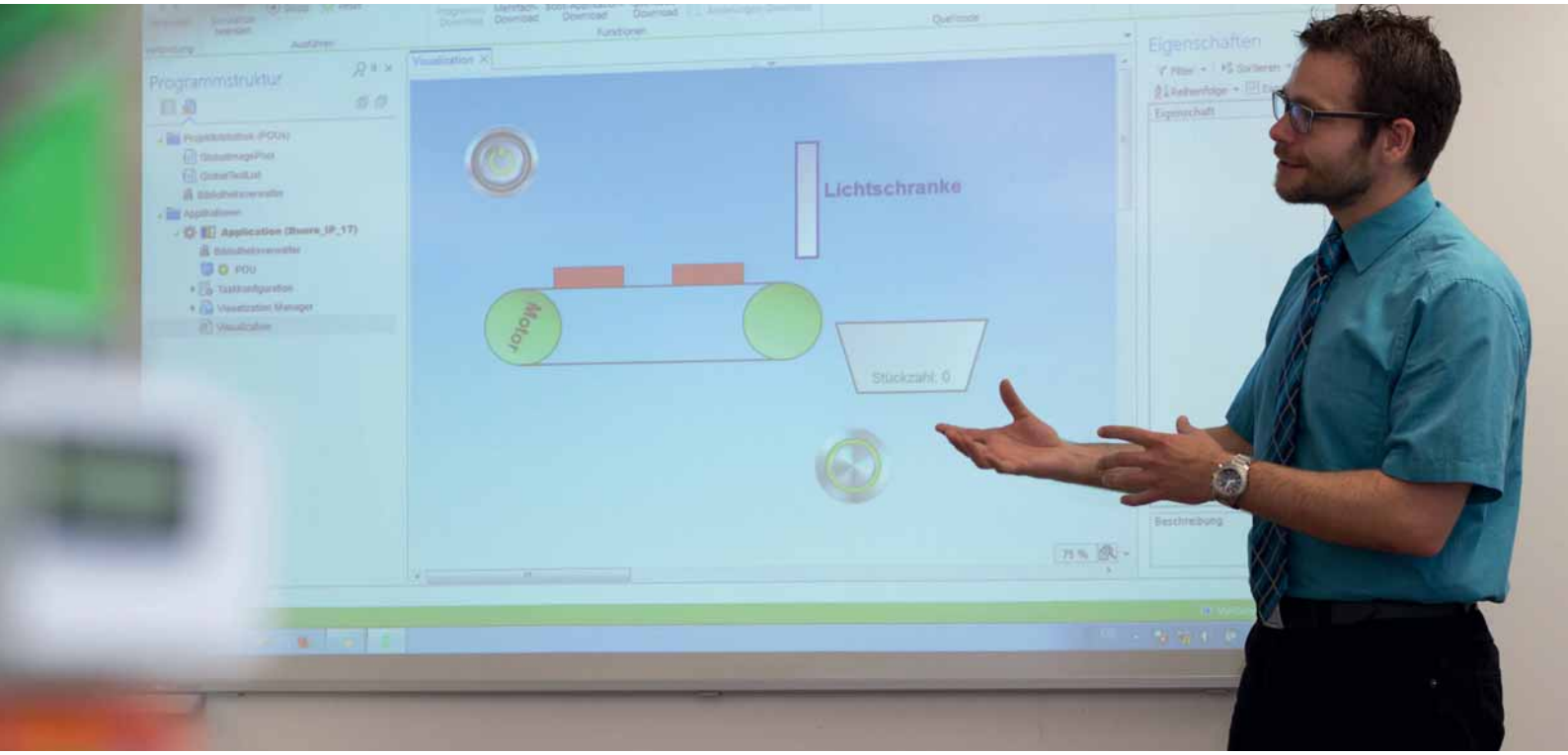

Setting the Bar with Your Goals

Product-related and customer-specific training seminars

Small Groups

No question goes unanswered and no one is overlooked in WAGO training courses made up of small groups.

Teamwork

Learning is effective in a group. Ideas can be discussed and exchanged while experiences can be shared – all for the benefit of the participants.

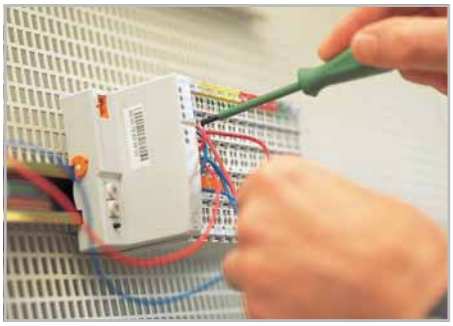

Practical Topics

Experience has shown that – practice makes perfect. The focus of every WAGO training seminar is on practical, hands-on learning.

WAGO Seminars – Learn Today

Experience the benefits of first-hand knowledge and expertise – straight from the source!

Your instructor is a specialist and knows all the ins and outs of the topic. Carefully developed, each WAGO training seminar ensures that every minute spent is an effective investment of your expertise.

Request your registration form by e-mail:

training@wago.com

Contact Your Local WAGO Company.

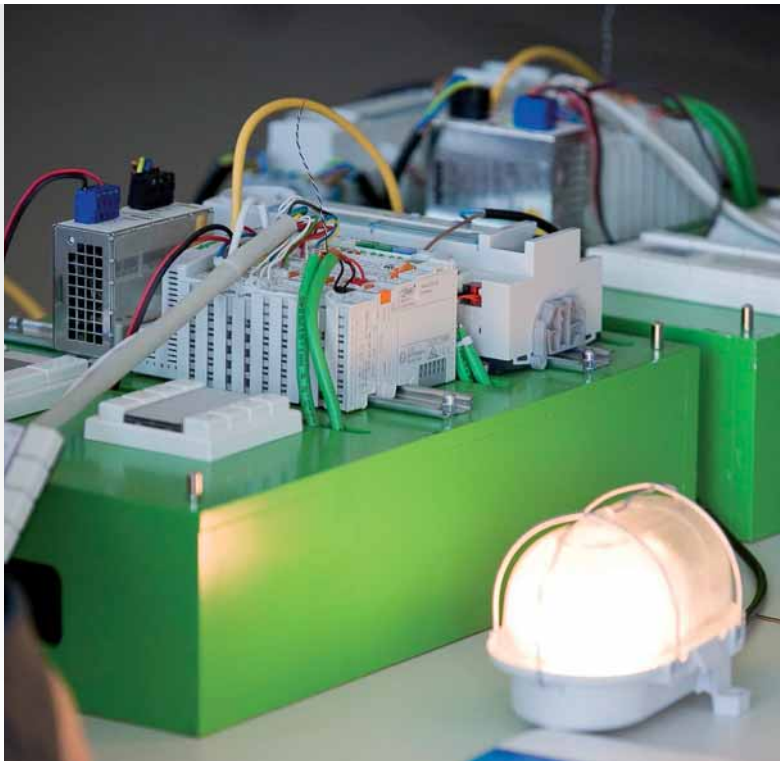

Product-Related Seminars

We regularly offer product-related training courses on the following:

- Building and industrial automation
- Programming of automation components
- Fieldbus systems

Current seminars at:

www.wago.com/seminare

Customer-Specific Training Seminars

In addition to these "open" seminars, we also offer customer-specific courses as company seminars to address your company's particular needs.

Upon request, we can also conduct these courses at your location.

Special company seminars

	Page
Item Number Index	710
WAGO Locations – Worldwide –	716

Item Number Index

Item no.	Page
206 Series	
206-118	689
206-124	688
206-125	688
206-126	688
206-127	688
206-128	688
206-170	687
206-171	687
206-173	687
206-174	687
206-204	689
206-216	689
206-701	519
206-804	691
206-806	690
206-807	690
206-808	690
206-810	691
206-811	691
206-816	691
209 Series	
209-109	685
209-501	674
210 Series	
210-110	521
210-112	684
210-113	684
210-114	684
210-115	684
210-118	684
210-133	659
210-148	685
210-149	685
210-196	684
210-197	684
210-198	684
210-504	684
210-505	684
210-506	684
210-508	684
210-647	686
210-648	686
210-657	686
210-658	686
210-701	671
210-703	671
210-704	671
210-705	671
210-705/000-002	671
210-706	671
210-706/000-002	671
210-707	671
210-707/000-002	671
210-708	671
210-710	671
210-719	686
210-720	674
210-721	686
210-722	686
210-732	671
210-801	682
210-802	682
210-803	682
210-804	682
210-805	682
210-805/000-002	682
210-806	682
210-806/000-002	682
210-807	682
210-807/000-002	682
210-808	682
210-811	682
210-811/000-002	682
210-831	683
210-832	683
210-833	683
210-834	683
210-850	683
210-851	683
210-852	683
210-853	683
210-854	683
210-855	683
210-856	683
210-857	683
210-858	683
210-859	683
210-860	683
210-861	683
210-862	683
210-863	683
211 Series	
211-110	680
211-111	680
211-112	680
211-113	680
211-114	680
211-115	680
211-120	680
211-121	680
211-122	680
211-123	680
211-124	680
211-125	680
211-129	680
211-150	681
211-151	681
211-155	681
211-156	681
211-161	681
211-162	681
211-211	671
211-611	670
211-612	670
211-613	670
211-614	670
211-615	670
211-811	682
211-812	682
211-813	682
211-821	682
211-823	682
211-824	682
211-829	682
211-835	682
211-836	682
211-855	682
211-856	682
211-857	682
211-861	682
211-862	682
211-863	682
247 Series	
247-506	675
247-506/000-006	675
247-507	675
247-507/000-006	675
247-508	675
247-508/000-005	675
247-509	675
247-509/000-005	675
247-510	675
247-511	675
247-512	675
247-513	675
247-514	675
247-515	675
247-516	675
247-517	675
247-518	675
247-519	675
247-520	675
247-521	675
247-522	675
247-523	675
247-524	675
247-525	675
247-526	675
247-527	675
247-528	675
247-529	675
247-530	675
247-531	675
247-532	675
247-533	675
247-534	675
247-535	675
247-536	675
247-537	675
247-538	675
247-539	675
247-540	675
247-541	675
247-542	675
247-543	675
247-544	675
247-544/000-006	675
247-545	675
247-545/000-005	675
247-546	675
247-546/000-006	675
247-547	675
247-552	675
247-552/000-017	675
248 Series	
248-501	674
248-501/000-002	674
248-501/000-005	674
248-501/000-006	674
248-501/000-007	674
248-501/000-012	674
248-501/000-017	674
248-501/000-023	674
248-501/000-024	674
248-578	675
248-578/000-017	675
249 Series	
249-116	685
249-117	685
258 Series	
258-143	670
258-144	670
258-145	670
258-149	670
258-150	670
258-157	670
258-161	670
258-162	670
258-166	670
258-169	670
258-171	670
258-173	670
258-177	670
258-178	670
258-200	669
258-298	668
258-326	672
258-327	672
258-328	672
258-329	672
258-342	670
258-361	673
258-362	673
258-363	673
258-364	673
258-365	673
258-366	673
258-367	673
258-368	673
258-369	673
258-370	673
258-371	673
258-372	673
258-373	673
258-374	673
258-375	673
258-377	673
258-378	673
258-379	673
258-380	673
258-381	673
258-382	673
258-383	673
258-387	673
258-388	673
258-389	673
258-390	673
258-391	673
258-392	673
258-393	673
258-394	673
258-396	673
258-397	673
258-398	673
258-399	673
258-410	673
258-452	672
258-452/000-002	672
258-452/000-003	672
258-452/000-004	672
258-452/000-005	672
258-452/000-007	672
258-452/000-010	672
258-453	672
258-454	673
258-455	673
258-456	673
258-457	672
258-470	673
258-471	673
258-472	673
258-473	673
258-5000	667
258-5005	667
258-5006	667
258-5007	667
258-5008	667
258-5015	667
288 Series	
288-800	603
288-801	603
288-808	603
288-809	603
288-810	603
288-812	603
288-813	603
288-814	603
288-815	603
288-816	603
288-824	604
288-895	603
288-936	344
289 Series	
289-611	613
289-614	613
289-907	603
289-913	605

Item no.	Page
704 Series	
704-5003	612
704-5004	609
704-5013	612
704-5014	609
704-5024	608
704-5034	609
704-5044	608
704-5054	610
704-5064	611
704-5074	610
706 Series	
706-100/1300-200	619
706-100/1301-200	619
706-100/1303-200	619
706-100/1602-200	619
706-753/300-100	618
706-753/300-200	618
706-753/300-300	618
706-3057/1300-200	614
706-3057/300-100	614
706-3057/300-200	614
706-3057/300-300	614
706-7753/300-100	615
706-7753/301-200	615
706-7753/302-100	614
706-7753/302-200	614
706-7753/304-100	618
706-7753/304-200	618
706-7753/304-300	618
706-7753/306-100	619
706-7753/306-200	619
706-7753/306-300	619
709 Series	
709-118	671
709-119	671
709-120	671
709-177	670
709-178	670
709-350	659
709-352	659
735 Series	
735-500	634
750 Series	
750-100	674
750-103	676
750-105	676
750-106	677
750-107	677
750-303	136
750-304	172
750-306	152
750-306/000-005	152
750-306/000-006	152
750-307	156
750-310	180
750-315/300-000	168
750-316/300-000	170
750-331	142
750-333	138
750-333/025-000	138
750-333/040-000	400
750-334	178
750-337	158
750-337/025-000	158
750-338	160
750-338/040-000	404
750-340	128
750-342	146
750-343	140

Item no.	Page
750-344	174
750-345	176
750-346	154
750-347	162
750-348	164
750-351	166
750-352	144
750-352/040-000	402
750-354	148
750-354/000-001	150
750-370	130
750-375	132
750-375/025-000	132
750-377	134
750-377/025-000	134
750-400	186
750-400/025-000	186
750-401	186
750-402	189
750-402/025-000	189
750-403	189
750-404	292
750-404/000-001	292
750-404/000-002	292
750-404/000-003	292
750-404/000-004	292
750-404/000-005	292
750-405	214
750-406	212
750-407	211
750-407/040-000	408
750-408	192
750-408/025-000	192
750-409	192
750-410	187
750-411	187
750-412	208
750-412/000-001	208
750-414	184
750-415	205
750-418	188
750-421	188
750-422	191
750-423	206
750-424	216
750-425	215
750-427	210
750-428	207
750-430	195
750-430/025-000	195
750-431	195
750-432	190
750-433	190
750-435	344
750-436	196
750-437	196
750-438	346
750-439	348
750-450	273
750-451	274
750-452	252
750-452/000-200	252
750-453	259
750-453/040-000	412
750-454	252
750-454/000-003	252
750-454/000-200	252
750-454/025-000	252
750-454/025-003	252
750-455	259
750-455/025-000	259
750-455/040-000	412
750-456	261
750-456/000-200	261
750-457	267
750-457/025-000	267
750-457/040-000	414
750-459	267
750-460	270
750-460/000-003	270
750-460/000-005	270
750-461	269

Item no.	Page
750-461/000-002	269
750-461/000-003	269
750-461/000-004	269
750-461/000-005	269
750-461/000-007	269
750-461/000-009	269
750-461/000-200	269
750-461/003-000	269
750-461/020-000	269
750-461/025-000	269
750-463	271
750-464	272
750-464/020-000	272
750-464/040-000	415
750-465	253
750-465/000-200	253
750-465/025-000	253
750-466	253
750-466/000-003	253
750-466/000-200	253
750-466/025-000	253
750-467	265
750-467/000-200	265
750-468	266
750-468/000-200	266
750-468/025-000	266
750-468/040-000	413
750-469	275
750-469/000-001	275
750-469/000-002	275
750-469/000-003	275
750-469/000-006	275
750-469/000-008	275
750-469/000-012	275
750-469/000-200	275
750-469/000-206	275
750-469/003-000	275
750-469/040-000	416
750-470	254
750-470/005-000	254
750-472	255
750-472/000-200	255
750-472/005-000	255
750-473	254
750-473/005-000	254
750-474	255
750-474/000-200	255
750-474/005-000	255
750-475	260
750-475/020-000	260
750-476	263
750-476/000-200	263
750-476/005-000	263
750-477	264
750-478	263
750-478/005-000	263
750-479	262
750-479/000-001	262
750-480	256
750-480/000-001	256
750-481/003-000	360
750-482	258
750-482/000-300	258
750-482/025-000	258
750-483	268
750-484	358
750-485	356
750-487/003-000	362
750-491	276
750-491/000-001	276
750-492	257
750-493	277
750-493/000-001	277
750-494	278
750-494/000-001	278
750-494/025-000	278
750-494/025-001	278
750-495	279
750-495/000-001	279
750-495/000-002	279
750-501	222
750-501/000-800	222

Item no.	Page
750-502	223
750-502/000-800	223
750-504	226
750-504/000-800	226
750-504/025-000	226
750-504/025-800	226
750-506	224
750-506/000-800	224
750-508	225
750-508/000-800	225
750-508/040-000	409
750-509	242
750-511	294
750-511/000-001	294
750-511/000-002	294
750-512	246
750-513	247
750-513/000-001	247
750-514	244
750-516	228
750-517	245
750-517/040-000	410
750-519	220
750-522	243
750-523	248
750-530	230
750-530/025-000	230
750-531	227
750-531/000-800	227
750-532	229
750-534	221
750-535	352
750-536	231
750-537	232
750-538	354
750-550	285
750-550/000-200	285
750-552	282
750-552/000-200	282
750-552/025-000	282
750-553	284
750-554	282
750-554/000-200	282
750-554/025-000	282
750-555	284
750-556	285
750-556/000-200	285
750-557	287
750-557/040-000	418
750-559	287
750-559/025-000	287
750-559/040-000	418
750-560	288
750-562	286
750-563	283
750-563/040-000	417
750-585	364
750-586	364
750-600	390
750-600/025-000	390
750-600/040-000	427
750-601	371
750-602	370
750-602/025-000	370
750-602/040-000	420
750-603	377
750-604	378
750-606	342
750-609	371
750-610	372
750-611	372
750-612	370
750-612/040-000	421
750-613	374
750-613/040-000	422
750-614	376
750-615	371
750-616	389
750-616/030-000	389
750-617	371
750-621	389
750-622	386

Item Number Index

Item no.	Page
750-623	373
750-624	382
750-624/000-001	382
750-624/020-000	382
750-624/020-001	382
750-624/040-001	423
750-625/000-001	342
750-626	383
750-626/020-000	383
750-626/025-000	383
750-626/025-001	383
750-626/040-000	424
750-627	384
750-628	385
750-630	295
750-630/000-001	295
750-630/000-002	295
750-630/000-004	295
750-630/000-005	295
750-630/000-006	295
750-630/000-007	295
750-630/000-008	295
750-630/000-009	295
750-630/000-011	295
750-630/000-012	295
750-630/000-013	295
750-630/003-000	295
750-631/000-004	296
750-632	310
750-633	366
750-635	298
750-636	309
750-636/000-700	309
750-636/000-800	309
750-636/025-000	309
750-637	297
750-637/000-001	297
750-637/000-002	297
750-637/000-003	297
750-637/000-004	297
750-638	293
750-638/025-000	293
750-640	299
750-642	319
750-643	323
750-644	318
750-645	301
750-650	314
750-650/000-001	314
750-650/000-002	314
750-650/000-004	314
750-650/000-006	314
750-650/000-009	314
750-650/000-010	314
750-650/000-011	314
750-650/000-012	314
750-650/000-013	314
750-650/000-015	314
750-650/003-000	314
750-651	317
750-651/000-001	317
750-651/000-002	317
750-652	316
750-652/025-000	316
750-652/040-000	419
750-653	315
750-653/000-001	315
750-653/000-002	315
750-653/000-006	315
750-653/000-007	315
750-653/003-000	315
750-653/025-000	315
750-653/025-018	315
750-654	329
750-655	325
750-657	327
750-658	328
750-660/000-001	334
750-661/000-003	332
750-662/000-003	333
750-663/000-003	338
750-665/000-001	337
750-666/000-003	336
750-667/000-003	335
750-670	302
750-671	303
750-672	304
750-673	306
750-804	104
750-806	92
750-815/300-000	94
750-815/325-000	94
750-816/300-000	96
750-8202	58
750-8202/025-000	58
750-8202/025-001	58
750-8202/025-002	58
750-8203	56
750-8203/025-000	56
750-8204	54
750-8204/025-000	54
750-8206	52
750-8206/025-000	52
750-8206/025-001	52
750-829	86
750-830	84
750-831	82
750-833	98
750-833/025-000	98
750-837	100
750-837/020-000	100
750-837/021-000	100
750-838	102
750-838/020-000	102
750-838/021-000	102
750-838/040-000	114
750-842	90
750-843	88
750-852	78
750-872	74
750-873	76
750-880	66
750-880/025-000	66
750-880/025-001	66
750-880/025-002	66
750-880/040-000	112
750-880/040-001	112
750-881	68
750-882	72
750-885	70
750-885/025-000	70
750-889	80
750-920	384
750-921	547
750-923	14
750-923/000-001	633
750-925	301
750-960	634
750-961	640
750-962	641
750-963	639
750-965	642
750-971	635
750-972	636
750-975	637
750-976	638
750-1400	201
750-1402	203
750-1405	202
750-1405/040-000	407
750-1406	202
750-1407	204
750-1415	199
750-1415/040-000	406
750-1416	199
750-1417	200
750-1418	200
750-1420	193
750-1421	193
750-1422	194
750-1423	194
750-1425	217
750-1500	237
750-1501	239
750-1502	197
750-1504	238
750-1505	240
750-1506	198
750-1515	235
750-1515/040-000	411
750-1516	236
750-1605	379
750-1605/040-000	425
750-1606	380
750-1606/040-000	426
750-1607	381

753 Series

Item no.	Page
753-110	185
753-120	332
753-150	185
753-400	186
753-401	186
753-402	189
753-403	189
753-404	292
753-404/000-003	292
753-404/000-005	292
753-405	214
753-406	212
753-408	192
753-409	192
753-410	187
753-411	187
753-412	208
753-415	205
753-418	188
753-421	188
753-422	191
753-423	206
753-424	216
753-425	215
753-427	210
753-428	207
753-429	209
753-430	195
753-431	195
753-432	190
753-433	190
753-434	185
753-436	196
753-437	196
753-440	213
753-452	252
753-453	259
753-454	252
753-455	259
753-456	261
753-457	267
753-459	267
753-461	269
753-461/003-000	269
753-465	253
753-466	253
753-467	265
753-469	275
753-469/003-000	275
753-472	255
753-474	255
753-475	260
753-476	263
753-477	264
753-478	263
753-479	262
753-480	256
753-482	258
753-483	268
753-492	257
753-501	222
753-501/000-800	222
753-502	223
753-502/000-800	223
753-504	226
753-506	224
753-508	225
753-509	242
753-511	294
753-512	246
753-513	247
753-514	244
753-516	228
753-517	245
753-530	230
753-531	227
753-531/000-800	227
753-534	221
753-536	231
753-537	232
753-540	241
753-550	285
753-552	282
753-553	284
753-554	282
753-555	284
753-556	285
753-557	287
753-559	287
753-602	370
753-603	377
753-604	378
753-612	370
753-614	376
753-620	375
753-629/020-000	388
753-635	298
753-638	293
753-646	320
753-647	321
753-648	322
753-650	314
753-650/003-000	314
753-652	316
753-653	315
753-653/003-000	315
753-655	325
753-661/000-003	332
753-662/000-003	333
753-666/000-003	336
753-667/000-003	335
753-1629	387
753-1629/000-001	387

756 Series

Item no.	Page
756-1101/060-020	508
756-1101/060-050	508
756-1101/060-100	508
756-1101/060-200	508
756-1102/060-020	508
756-1102/060-050	508
756-1102/060-100	508
756-1102/060-200	508
756-1103/060-020	508
756-1103/060-050	508
756-1103/060-100	508
756-1103/060-200	508
756-1104/060-020	508
756-1104/060-050	508
756-1104/060-100	508
756-1104/060-200	508
756-1105/060-020	509
756-1105/060-050	509
756-1105/060-100	509
756-1105/060-200	509
756-1106/060-020	509
756-1106/060-050	509
756-1106/060-100	509
756-1106/060-200	509
756-1201/060-020	510
756-1201/060-050	510
756-1201/060-100	510

Item no.	Page
756-1201/060-200	510
756-1202/060-020	510
756-1202/060-050	510
756-1202/060-100	510
756-1202/060-200	510
756-1203/060-020	510
756-1203/060-050	510
756-1203/060-100	510
756-1203/060-200	510
756-1204/060-020	510
756-1204/060-050	510
756-1204/060-100	510
756-1204/060-200	510
756-1300/000-250	505
756-1300/000-500	505
756-1300/000-1000	505
756-1301/060-020	504
756-1301/060-050	504
756-1301/060-100	504
756-1301/060-200	504
756-1302/060-020	504
756-1302/060-050	504
756-1302/060-100	504
756-1302/060-200	504
756-1303/060-020	504
756-1303/060-050	504
756-1303/060-100	504
756-1303/060-200	504
756-1304/060-020	504
756-1304/060-050	504
756-1304/060-100	504
756-1304/060-200	504
756-1305/060-002	505
756-1305/060-003	505
756-1305/060-005	505
756-1305/060-010	505
756-1305/060-020	505
756-1305/060-030	505
756-1305/060-050	505
756-1305/060-070	505
756-1305/060-100	505
756-1305/060-200	505
756-1305/060-500	505
756-1306/060-002	505
756-1306/060-003	505
756-1306/060-005	505
756-1306/060-010	505
756-1306/060-020	505
756-1306/060-030	505
756-1306/060-050	505
756-1306/060-070	505
756-1306/060-100	505
756-1306/060-200	505
756-1306/060-500	505
756-1401/060-020	512
756-1401/060-050	512
756-1401/060-100	512
756-1401/060-200	512
756-1402/060-020	512
756-1402/060-050	512
756-1402/060-100	512
756-1402/060-200	512
756-1403/060-020	512
756-1403/060-050	512
756-1403/060-100	512
756-1403/060-200	512
756-1404/060-020	512
756-1404/060-050	512
756-1404/060-100	512
756-1404/060-200	512
756-1405/060-020	513
756-1405/060-050	513
756-1405/060-100	513
756-1405/060-200	513
756-1406/060-020	513
756-1406/060-050	513
756-1406/060-100	513
756-1406/060-200	513
756-1500/000-250	503
756-1500/000-500	503

Item no.	Page
756-1500/000-1000	503
756-1501/060-020	502
756-1501/060-050	502
756-1501/060-100	502
756-1501/060-200	502
756-1502/060-020	502
756-1502/060-050	502
756-1502/060-100	502
756-1502/060-200	502
756-1503/060-020	502
756-1503/060-050	502
756-1503/060-100	502
756-1503/060-200	502
756-1504/060-020	502
756-1504/060-050	502
756-1504/060-100	502
756-1504/060-200	502
756-1505/060-002	503
756-1505/060-003	503
756-1505/060-005	503
756-1505/060-010	503
756-1505/060-020	503
756-1505/060-050	503
756-1505/060-100	503
756-1505/060-200	503
756-1505/060-500	503
756-1506/060-002	503
756-1506/060-003	503
756-1506/060-005	503
756-1506/060-010	503
756-1506/060-020	503
756-1506/060-050	503
756-1506/060-100	503
756-1506/060-200	503
756-1506/060-500	503
756-1601/060-020	511
756-1601/060-050	511
756-1601/060-100	511
756-1601/060-200	511
756-1602/060-020	511
756-1602/060-050	511
756-1602/060-100	511
756-1602/060-200	511
756-1603/060-020	511
756-1603/060-050	511
756-1603/060-100	511
756-1603/060-200	511
756-1604/060-020	511
756-1604/060-050	511
756-1604/060-100	511
756-1604/060-200	511
756-3100/000-250	507
756-3100/000-500	507
756-3100/000-1000	507
756-3101/040-020	506
756-3101/040-050	506
756-3101/040-100	506
756-3101/040-200	506
756-3102/040-020	506
756-3102/040-050	506
756-3102/040-100	506
756-3102/040-200	506
756-3103/040-020	506
756-3103/040-050	506
756-3103/040-100	506
756-3103/040-200	506
756-3104/040-020	506
756-3104/040-050	506
756-3104/040-100	506
756-3104/040-200	506
756-3105/040-002	507
756-3105/040-003	507
756-3105/040-005	507
756-3105/040-010	507
756-3105/040-020	507
756-3105/040-030	507
756-3105/040-050	507
756-3105/040-070	507
756-3105/040-100	507
756-3105/040-150	507
756-3105/040-200	507

Item no.	Page
756-3106/040-002	507
756-3106/040-003	507
756-3106/040-005	507
756-3106/040-010	507
756-3106/040-020	507
756-3106/040-030	507
756-3106/040-050	507
756-3106/040-070	507
756-3106/040-100	507
756-3106/040-200	507
756-3201/120-050	597
756-3201/120-100	597
756-3201/120-150	597
756-3202/120-050	597
756-3202/120-100	597
756-3202/120-150	597
756-3203/190-050	597
756-3203/190-100	597
756-3203/190-150	597
756-3204/190-050	597
756-3204/190-100	597
756-3204/190-150	597
756-3205/140-050	597
756-3205/140-100	597
756-3205/140-150	597
756-3206/140-050	597
756-3206/140-100	597
756-3206/140-150	597
756-4101/042-030	14
756-4101/042-030	516
756-5101/030-015	621
756-5101/030-050	621
756-5101/030-100	621
756-5102/030-015	621
756-5102/030-050	621
756-5102/030-100	621
756-5111/030-015	622
756-5111/030-050	622
756-5111/030-100	622
756-5112/030-015	622
756-5112/030-050	622
756-5112/030-100	622
756-5201/030-010	623
756-5201/030-020	623
756-5202/030-010	623
756-5202/030-020	623
756-5203/030-010	623
756-5203/030-020	623
756-5204/030-010	623
756-5204/030-020	623
756-5301/030-015	621
756-5301/030-050	621
756-5301/030-100	621
756-5301/040-015	621
756-5301/040-050	621
756-5301/040-100	621
756-5301/050-015	621
756-5301/050-050	621
756-5301/050-100	621
756-5301/060-015	621
756-5301/060-050	621
756-5301/060-100	621
756-5302/030-015	621
756-5302/030-050	621
756-5302/030-100	621
756-5302/040-015	621
756-5302/040-050	621
756-5302/040-100	621
756-5302/050-015	621
756-5302/050-050	621
756-5302/050-100	621
756-5302/060-015	621
756-5302/060-050	621
756-5302/060-100	621
756-5311/030-015	622
756-5311/030-050	622
756-5311/030-100	622

Item no.	Page
756-5311/040-015	622
756-5311/040-050	622
756-5311/040-100	622
756-5311/050-015	622
756-5311/050-050	622
756-5311/050-100	622
756-5311/060-015	622
756-5311/060-050	622
756-5311/060-100	622
756-5311/090-015	622
756-5311/090-050	622
756-5311/090-100	622
756-5312/030-015	622
756-5312/030-050	622
756-5312/030-100	622
756-5312/040-015	622
756-5312/040-050	622
756-5312/040-100	622
756-5312/050-015	622
756-5312/050-050	622
756-5312/050-100	622
756-5312/060-015	622
756-5312/060-050	622
756-5312/060-100	622
756-5312/090-015	622
756-5312/090-050	622
756-5312/090-100	622
756-5401/030-010	626
756-5401/030-020	626
756-5401/040-010	626
756-5401/040-020	626
756-5401/050-010	626
756-5401/050-020	626
756-5401/060-010	626
756-5401/060-020	626
756-5402/030-010	626
756-5402/030-020	626
756-5402/040-010	626
756-5402/040-020	626
756-5402/050-010	626
756-5402/050-020	626
756-5402/060-010	626
756-5402/060-020	626
756-5403/030-010	626
756-5403/030-020	626
756-5403/040-010	626
756-5403/040-020	626
756-5403/050-010	626
756-5403/050-020	626
756-5403/060-010	626
756-5403/060-020	626
756-5404/030-010	626
756-5404/030-020	626
756-5404/040-010	626
756-5404/040-020	626
756-5404/050-010	626
756-5404/050-020	626
756-5404/060-010	626
756-5404/060-020	626
756-5501/030-010	625
756-5501/030-020	625
756-5502/030-010	625
756-5502/030-020	625
756-5503/030-010	625
756-5503/030-020	625
756-5504/030-010	625
756-5504/030-020	625
756-5507/030-010	624
756-5507/030-020	624
756-5507/040-010	624
756-5507/040-020	624
756-5508/030-010	624
756-5508/030-020	624
756-5508/040-010	624
756-5508/040-020	624
756-5509/030-010	624
756-5509/030-020	624
756-5509/040-010	624
756-5509/040-020	624
756-5510/030-010	624
756-5510/030-020	624

Item Number Index

Item no.	Page
756-5510/040-010	624
756-5510/040-020	624
756-5513/040-010	627
756-5513/040-020	627
756-5514/040-010	627
756-5514/040-020	627
756-5516/040-010	627
756-5516/040-020	627
756-5517/040-010	627
756-5517/040-020	627
756-8101	520
756-8102	520
756-8103	520
756-8104	520
756-8201	518
756-8301	520
756-8302	520
756-9102/030-000	628
756-9105/030-000	628
756-9112/030-000	628
756-9115/030-000	628
756-9201/040-000	628
756-9201/050-000	628
756-9202/040-000	628
756-9202/050-000	628
756-9203/040-000	515
756-9203/050-000	515
756-9204/040-000	628
756-9204/050-000	628
756-9205/040-000	628
756-9205/050-000	628
756-9206/040-000	515
756-9206/050-000	515
756-9207/050-000	517
756-9207/060-000	514
756-9208/060-000	514
756-9209/060-000	516
756-9210/060-000	514
756-9211/040-000	628
756-9211/060-000	514
756-9211/090-000	514
756-9212/040-000	628
756-9212/050-000	628
756-9213/040-000	515
756-9213/050-000	515
756-9214/040-000	628
756-9214/090-000	514
756-9215/040-000	628
756-9215/050-000	628
756-9216/040-000	515
756-9216/050-000	515
756-9217/050-000	520
756-9218/050-000	518
756-9301/040-000	627
756-9301/050-000	627
756-9303/050-000	516
756-9401/060-000	514
756-9402/060-000	514
756-9403/060-000	514
756-9404/060-000	514
756-9405/060-000	516
756-9406/050-000	520
756-9409/060-000	516
756-9411/060-000	514
756-9412/060-000	514
756-9413/060-000	514
756-9414/060-000	514
756-9501/040-000	514
756-9501/060-000	514
756-9503/040-000	517
756-9504/040-000	517
756-9601/060-000	518
756-9602/060-000	518
756-9603/060-000	518
756-9604/060-000	518

Item no.	Page
757 Series	
757-000	596
757-001	596
757-011	596
757-040	596
757-041	596
757-060	596
757-061	596
757-080	596
757-081	596
757-144	588
757-145	590
757-164	588
757-165	590
757-184	588
757-185	590
757-185/100-000	590
757-244/000-005	584
757-244/000-010	584
757-245/000-005	586
757-245/000-010	586
757-264/000-005	584
757-264/000-010	584
757-265/000-005	586
757-265/000-010	586
757-284/000-005	584
757-284/000-010	584
757-284/000-025	584
757-285/000-005	586
757-285/000-010	586
757-285/000-025	586
757-303	594
757-343	594
757-363	594
757-383	594
757-403/000-005	592
757-403/000-010	592
757-443/000-002	592
757-443/000-005	592
757-443/000-010	592
757-463/000-005	592
757-463/000-010	592
757-483/000-005	592
757-483/000-010	592
757-801	546
757-901/000-050	521
758 Series	
758-879/000-000	42
758-879/000-001	42
758-879/000-002	42
758-879/000-100	42
758-879/000-101	42
758-879/000-300	42
758-879/000-301	42
758-879/000-302	42
758-879/000-303	42
758-879/000-304	42
758-910	554
758-912	554
758-915	545
758-916	549
758-917	549
758-940/001-000	554
758-940/002-000	554
758-940/003-000	554
758-940/004-000	554
758-961	576
758-962	576
758-963	576
758-964	576
758-965	576
758-966	576
758-967	576
758-968	576

Item no.	Page
758-969	576
758-970/000-100	576
758-970/000-300	576
758-970/000-500	576
758-970/000-1000	576
758-971	576
759 Series	
759-302	13
759-302/000-923	13
759-333	12
759-333/000-923	12
759-359	258
759-360	258
759-370	14
759-911	12
759-920	13
759-930	15
761 Series	
761-110	564
761-111	565
761-112	566
761-113	567
761-114	568
761-210	569
761-214	570
761-216	571
761-217	572
761-314	573
761-316	574
761-700	28
761-700/000-005	28
761-700/000-020	28
761-701	28
761-702	28
761-702/000-005	28
761-702/000-020	28
761-703	28
761-703/000-005	28
761-703/000-020	28
761-704	28
761-9005	577
761-9008	577
761-9009	575
761-9010	577
761-9011	577
762 Series	
762-1035	38
762-1057	38
762-1104	39
762-1121	39
762-3035/000-001	40
762-3057/000-001	40
762-3104/000-001	41
762-3121/000-001	41
762-3150/000-001	41
762-3150/000-003	41
767 Series	
767-101	521
767-102	521
767-103	521
767-104	521
767-111	521
767-121	520
767-122	520
767-123	520
767-124	520
767-125	520

Item no.	Page
767-126	520
767-1101	438
767-1201	436
767-1301	440
767-1311	442
767-1401	444
767-1501	446
767-3801	448
767-3802	450
767-3803	452
767-3804	454
767-3805	456
767-3806	458
767-4801	460
767-4801/000-800	460
767-4802	462
767-4802/000-800	462
767-4803	464
767-4803/000-800	464
767-4804	466
767-4804/000-800	466
767-4805	468
767-4806	470
767-4807	472
767-4807/000-800	472
767-4808	474
767-5201	492
767-5202	494
767-5203	496
767-5204	498
767-5401	482
767-5801	476
767-5801/000-800	476
767-5802	478
767-5802/000-800	478
767-5803	480
767-5803/000-800	480
767-6401	484
767-6402	486
767-6403	488
767-7401	490
767-9101	500
770 Series	
770-629/101-000	553
770-629/102-000	553
787 Series	
787-601	602
787-602	602
787-611	602
787-612	602
787-613	602
787-621	602
787-622	602
787-623	602
787-632	602
787-633	602
787-692	602
787-712	602
787-722	602
787-732	602
787-818	602
787-819	602
787-821	602
787-822	602

Item no.	Page
787-831	602
787-832	602
787-833	602
787-834	602
787-835	602
787-840	602
787-842	602
787-844	602
787-845	602
787-847	602
787-850	602
787-852	602
787-854	602
787-860	603
787-861	603
787-862	603
787-870	603
787-871	603
787-872	603
787-873	603
787-875	603
787-876	603
787-880	603
787-1001	602
787-1002	602
787-1007	653
787-1011	602
787-1012	602
787-1021	602
787-1022	602
787-1664	603
787-1668	603
787-1675	602
787-1675	603
789 Series	
789-601	552
789-602	552
790 Series	
790-100	659
790-101	659
790-108	658
790-110	659
790-112	659
790-113	659
790-114	659
790-115	659
790-116	658
790-124	658
790-133	659
790-134	659
790-140	658
790-144	659
790-145	659
790-190	659
790-191	659
790-192	659
790-193	659
790-300	659
790-301	659
791 Series	
791-107	658
791-111	658
791-117	658
791-124	658
793 Series	
793-3501	674
793-4501	674
793-5501	674
807 Series	
807-090/101-100	680

Item no.	Page
810 Series	
810-900/000-001	654
810-900/001-000	654
810-900/002-000	654
810-900/003-000	654
810-900/004-000	654
810-901/000-001	655
810-901/001-000	655
810-902/000-001	655
810-902/000-002	655
850 Series	
850-804	645
850-804/000-001	645
850-805	645
850-814/002-000	646
850-815/002-000	646
850-816/002-000	646
850-817/002-000	646
850-818/002-000	647
850-818/002-001	647
850-818/002-002	647
850-818/002-003	647
850-818/002-004	647
850-818/002-005	647
850-819/002-000	647
850-819/002-001	647
850-819/002-002	647
850-819/002-003	647
850-819/002-004	647
850-819/002-005	647
850-820/002-001	647
850-820/002-002	647
850-825	648
850-826	648
850-826/002-000	648
850-827	648
850-827/002-000	648
850-828	648
850-828/002-000	648
850-834	649
850-835	649
850-836	649
850-903	645
850-904	646
852 Series	
852-101	528
852-102	529
852-103	530
852-103/040-000	530
852-104	531
852-104/040-000	531
852-111	532
852-112	533
852-201/040-002	536
852-201/107-002	536
852-201/107-030	536
852-1111	534
852-9101	535
857 Series	
857-981	616
857-982	616
857-986	617
859 Series	
859-801	603
859-802	603
859-804	603
859-805	603

Item no.	Page
2009 Series	
2009-110	670
2009-114	670
2009-115	670
2009-135	670
2759 Series	
2759-0101/1110-2002	10
2759-0101/1110-2010	10
2759-0101/1110-2015	10
2759-0101/1110-2020	10
2759-0101/1110-3000	10
2759-0101/1110-4000	10
2851 Series	
2851-8201	652
2851-8202	652
2851-8301	650
2851-8302	650
2851-8303	650

Item no.	Page

WAGO Worldwide – Companies and Representatives –

Algeria
please contact WAGO France

Argentina
Bruno Schillig S.A.
Arenales 4030, B1604CFD
Florida, PBA
Phone +54 11 4730 1100
Fax +54 11 4761 7244
wago@schillig.com.ar

Australia
WAGO Pty. Ltd.
2-4 Overseas Drive
Noble Park, Victoria, 3174
Tel. +61 03 8791 6300
Fax +61 03 9701 0177
sales@wago.com.au

NHP ELECTRICAL ENGINEERING PRODUCTS PTY LTD
43-67 River Street
Richmond, Victoria, 3121, P.O. Box 199
Phone +61 3 9429 2999
Fax +61 3 9429 1075
export@wago.com

Austria
WAGO Kontakttechnik Ges.m.b.H.
Campus 21, Europaring F15 602
2345 Brunn am Gebirge
Phone +43 1 6150780
Fax +43 1 6150775
info.at@wago.com

Azerbaijan
AZ Technics LTD
Zulfi V. Alizade
Y.Safarov str.33 , AZ1025,
Baku
Republic of Azerbaijan
Tel. +994 12 4968335
Fax +994 12 4968334
info@AZtechnics.az

Bangladesh
please contact WAGO India

Belarus
OOO FEK
pr-t Pushkina 29-B
220015 Minsk
Phone +375 17 2102189
Fax +375 17 2102189
wago@fek.by

UE ATAVA
ul. Denisovskaya, 47, office 1
220006 Minsk
Phone +375 17 2054015
Fax +375 17 2851759

Belgium
WAGO BeLux nv
Excelsiorlaan 11
1930 Zaventem
Tel. +32 2 717 9090
Fax +32 2 717 9099
info-be@wago.com

Bolivia
ISOTEK S.R.L.
Zona Casco Viejo
Calle Isso #578, B/San Roque
Santa Cruz
Tel. +591 721 000 27

Bosnia and Herzegovina
please contact WAGO Bulgaria

Brazil
WAGO Eletroeletrônicos Ltda
Rua Américo Simões 1470
São Roque da Chave
Itupeva SP Brasil 13295-000
Phone +55 11 4591 0199
Fax +55 11 4591 0190
info.br@wago.com

Bulgaria
WAGO Kontakttechnik GmbH & Co. KG/
Representative Office Sofia
Business Center Serdika
2E Akad. Ivan Geshov Blvd.
Building 1, Floor 4, Office 417
1330 Sofia
Tel. +359 2 489 46 09
Fax +359 2 928 28 50
info-BG@wago.com

Canada
please contact WAGO USA

Chile
Desimat Chile
Av Puerto Vespucio 9670
Pudahuel Santiago
Phone +56 2 7470152
Fax +56 2 7470153
ventaschile@desimat.cl

China
WAGO ELECTRONIC (TIANJIN) Co. LTD
No.5, Quan Hui Road
Wuqing Development Area
Tianjin 301700
Phone +86 22 59617688
Fax +86 22 59617668
info-cn@wago.com

Columbia
T.H.L. Ltda.
Cra. 49 B # 91-33
Bogotá
Phone +57 1 621 85 50
Fax +57 1 621 60 28
ventas-thl@thl-ltda.com

Croatia
M.B.A. d.o.o.
Frana Supila 5
51211 Matulji
Tel. +385 51 275-736
Fax +385 51 275-066
mba@ri.htnet.hr

MICROSTAR d.o.o.
Siget 18 b
10020 Zagreb
Tel. +385 1 3647 849
Fax +385 1 3636 662
wago@microstar.hr

Czech Republic
WAGO Elektro spol. sr. o.
Rozvodova 1116/36
143 00 Praha 4 - Modřany
Phone +420 261 090 143
Fax +420 261 090 144
info.cz@wago.com
wago-cz@wago.com

Denmark
WAGO Danmark A/S
Filial of WAGO Kontakttechnik GmbH & Co. KG
Lejrvej 17
3500 Værløse
Tel. +45 44 357 777
info.dk@wago.com

Ecuador
ECUAINSETEC CIA LTDA
El Zurriago E9-32 y el Vengador
Quito
Tel. +593 2 2 26 91 48
Fax +593 2 2 46 18 33
g.castro@ecuainsetec.com.ec

Egypt
IBN Engineering Instrumentation & Control
71 a El Shaheed Ahmed Hamdi St.
King Faisal, Giza
Phone +20 2 7214350
Fax +20 2 7221709
sales@ibnengineering.com

Estonia
Eltarko OÜ
Laki 14 - 502
10621 Tallinn
Phone +372 651 7731
Fax +372 651 7786
andres@eltarko.ee

Finland
WAGO Finland Oy
Vellamonkatu 30 B
00550 Helsinki
Tel. +358 9 7744 060
Fax +358 9 7744 0660
tilaus@wago.fi

France
WAGO CONTACT SAS
Paris Nord 2
83 Rue des Chardonnerets
B.P. 55065 - Tremblay en France
95947 - ROISSY CDG CEDEX
Phone +33 1 48172590
Fax +33 1 48632520
info-fr@wago.com

Germany
WAGO Kontakttechnik GmbH & Co. KG
Postfach 28 80, 32385 Minden
Hansastraße 27
32423 Minden
Phone +49 571 887-0
Fax +49 571 887-169
info@wago.com

WAGO Kontakttechnik GmbH & Co. KG
Waldstraße 1
99706 Sondershausen
Phone +49 3632 659-0
Fax +49 3632 659-100
info@wago.com

Great Britian
WAGO Limited
Triton Park, Swift Valley Industrial Estate
RUGBY
Warwickshire, CV21 1SG
Phone +44 1788 568008
Fax +44 1788 568050
uksales@wago.com

Greece
PANAGIOTIS SP. DIMOULAS - BIOMAT
DIMOULAS AUTOMATIONS
Kritis Str. 26
10439 Athen
Tel. +30 210 883 3337
Fax +30 210 883 4436
wago.info@dimoulas.com.gr

Honduras
CILASAS S.A. de C.V.
Barrio Los Andes
7 Calle entre 14 y 15 Ave. N.O.
P.O. Box. 1061
San Pedro Sula
Tel. +504 25571146/7
Fax +504 25571149

Hong Kong
National Concord Eng., Ltd.
Unit A-B, 5/F.
Southeast Industrial Building
611-619 Castle Peak Road
Tsuen Wan, N.T.
Phone +852 24292611
Fax +852 24292164
sales@nce.com.hk

Hungary
WAGO Hungária KFT
Ipari Park, Gyár u. 2
2040 Budapest
Phone +36 23 502-170
Fax +36 23 502-166
info.hu@wago.com

Iceland
S. Gudjonsson ehf.
Audbrekku 9-11
202 Kopavogur
Phone +354 520-4500
Fax +354 520-4501
export@wago.com

India
WAGO Private Limited
C-27, Sector-58, Phase-III
Noida-201 301
Gautam Budh Nagar (U.P)
Tel. +91 120 438 8700
Fax +91 120 438 8799
info.india@wago.com

Indonesia
please contact WAGO Singapore

Iraq
please contact WAGO Middle East

Ireland
Drives & Controls
Unit F4, Riverview Business Park
Nangor Road
Dublin 12
Phone +353 1 4604474
Fax +353 1 4604507
wago@drivesandcontrols.ie

Israel
Comtel Israel Electronic Solutions Ltd.
Bet Hapaamon
20 Hataas Street
P.O. Box 66
44425 Kefar-Saba
Phone +972 9 76 77 240
Fax +972 9 76 77 243
sales@comtel.co.il

Italy
WAGO ELETTRONICA SRL a Socio Unico
Via Parini 1
40033 Casalecchio di Reno (BO)
Tel. +39 051 6132112
Fax +39 051 6272174
info-ita@wago.com

Japan
WAGO Co. of JAPAN Ltd.
Kinshicho Prime Tower
5-7, Kameido, Koto-Ku
Tokyo 136-0071
Tel. +81 3 5627 2059
Fax +81 3 5627 2055
info-jp@wago.com

Jordan
please contact WAGO Middle East

Kazakhstan
TOO INTANT
232/2, Ryskulov avenue
050061 Almaty
Tel. +7 727 356 52 91/92/93
Fax +7 727 327 14 92/93
ee@intant.net
ees_sm1@intant.net

TOO Technik-Trade
ul. i. A. Protosanova, 81
070004 Ust-Kamenogorsk
Tel. +7 7232 254 064
Fax +7 7232 253 251
info@technik.kz

Korea
WAGO Korea Co., Ltd.
Room205 AnyangMegaValley,
268, Hagui-ro, Dongan-gu, Anyang-si,
Gyeonggi-do, 14056, South Korea
Tel. +82 31 420 2470
info.korea@wago.com

Kosovo
please contact WAGO Bulgaria

Latvia
INSTABALT LATVIA SIA
Vestienas iela 6
Rīga, LV-1035
Phone +371 790 1188
Fax +371 790 1180
info@instabalt.lv

Lebanon
Gemayel Trading & Contracting
Antonins Project
P.O. BOX 70-1096
Antelias
Lebanon
Tel. +961 4 521 029
Fax +961 4 521 029
indo@uae.com

Lithuania
INSTABALT LIT UAB
Savanorių 187
Vilnius, 2053
Phone +370 52 322 295
Fax +370 52 322 247
info@instabalt.lt

Luxembourg
please contact WAGO Belgium

Macedonia
please contact WAGO Bulgaria

Kompjunet Inzenering
Vladimir Komarov 1A-3/9
1000 Skopje
Republic of Macedonia
Tel. +389 2 521 12 00
Tel. +389 2 246 11 08

Malaysia
WAGO Representative Office Malaysia
No 806, Block A4, Leisure Commerce Square,
No 9, Jalan PJS 8/9, 46150 Petaling Jaya,
Selangor Darul Ehsan, Malaysia
Tel. +60 3 7877 1776
Fax +60 3 7877 2776
kian.guan.tan@wago.com

HPH Materials (M) Sdn Bhd
No. 4, Jalan Nilam 1/6
Suban Hi-Tech Industrial Park
40000 Shah Alam
Selangor, D.E. Malaysia
Tel. +60 3 5638 2213
Fax +60 3 5638 8213
info@hphmaterials.com

Mexico
WAGO SA de CV
Av. Del Marques 38 Bodega 3
P. I. Bernardo Quintana
76240 El Marques, Querétaro
Phone +52 442 221 5946
Fax +52 442 221 5063
Toll-Free: 001-800-309-5975
info.mx@wago.com

Moldova
Electroservice Slavinschi T.T.
str. Bolgarskaia 9, office 6
2001 Kishinev
Phone +373 22 274427
Fax +373 22 224481
es@es.mldnet.com

Morocco
Automatisme & Connection Maroc
23, Rue Boured
2ème étage, appt4
Roche Noire
20300 Casablanca
Tel. +212 522 24 21 72/73
Fax +212 522 24 21 75

Nepal
please contact WAGO India

Netherlands
WAGO Nederland B.V.
Laan van de Ram 19
7234 BW APELDOORN
Tel. +31 55 36 83 500
Fax +31 55 36 83 599
info-nl@wago.com

New Zealand
please contact WAGO Australia

Nigeria
GIL Automations Ltd.
Daily Times Complex
2 Lateef Jakande Rd., Agidingbi
100271 Ikeja, Lagos State
Tel. +234 17132672335
sales@gilautomation.com

Norway
WAGO Norge NUF
Jerikoveien 20
1067 Oslo
Phone +47 22 30 94 50
Fax +47 22 30 94 51
info.no@wago.com

Oman
please contact WAGO Middle East

Pakistan
FuziLogiX Automation & Control
Suit No. 14, 5th Floor, Shan Arcade
New Garden Town, Lahore
Pakistan
Phone +92 42 594 1503 - 4
Fax +92 42 585 1431
info@fuzilogix.com

Peru
Manufacturas Eléctricas S.A.
Av O.R. Benavides 1215
15000 Lima
Tel. +511 6196200
Fax +511 6196247

Philippines
please contact WAGO Singapore

Poland
WAGO ELWAG sp. z o. o.
ul. Piękna 58 a
50-506 Wrocław
Phone +48 71 3602970
Fax +48 71 3602999
wago.elwag@wago.com

Portugal
MORGADO & CA. LDA - SEDE
Estrada Exterior da
Circunvalação 3558/3560
Apartado 1057
4435 Rio Tinto
Phone +351 22 9770600
Fax +351 22 9770699
geral@morgadocl.pt

Quatar
please contact WAGO Middle East

Romania
WAGO Kontakttechnik GmbH & Co. KG/
Representative Office Bukarest
Str. Nicolae G. Caramfil Nr. 26
Bl. 1D, Et. 3, Ap. 7, Sect. 1, OP 52
014144-Bucuresti
Tel. +40-(0)31 421 85 68
info-RO@wago.com

VDR & Servicii srl
Str. Valeriu Braniște, nr. 60, ap.1, sector 3
Romania
Tel. +40 21 3225074/76
Fax +40 21 3225075
office@componente-automatizari.ro

Russia
OOO WAGO Contact Rus
Dmitrovskoe shosse, 157,
bldg. 12/5
127411 Moscow
Russia
Phone +7 495 663-3305
Fax +7 495 663-3308
info.ru@wago.com

OOO Decima
Projesd 4922, d. 4, str. 1
124460 Moscow / Selenograd
Tel. +7 495 988 4858
Fax +7 495 988 4858

ITC Electronics: Moscow
Radio str. 24
105005 Moscow
Tel. +7 495 775 1845
Fax +7 495 775 1848
moscow@itc-electronics.com

WAGO Branch office
Ekaterinburg
Tel. +7 343 216 3426

WAGO Branch office
Novosibirsk
Tel. +7 383 217 9244

WAGO Branch office
St. Petersburg
Tel. +7 812 312 1918

Saudi Arabia
Saudi Electronic Trading Company (SETRA)
P.O. Box 60712
11555-Riyadh
Tel. +966 1 2062277
Fax +966 1 2062277
khaled.wafai@setra.com.sa

Serbia
please contact WAGO Bulgaria

Avalon Partners doo
Patrijarha Dimitrija 24
11000 Beograd
Tel. +381 11 2685311
Fax +381 11 2685311
office@avalon.rs

Sigma doo
Balzakova 3
21000 Novi Sad
Tel. +381 21 468431
Fax +381 21 6361785
office@sigmadoo.co.rs

Singapore
WAGO Electronic Pte Ltd
No. 10 Upper Aljunied Link #04-04
Singapore 367904
Tel. +65 62866776
Fax +65 62842425
info-sing@wago.com

Slovakia
Proelektro spol. s r.o.
Na barine 22
841 03 Bratislava - Lamač
Tel. +421 2 4569 2503
info@wago.sk

Slovenia
IC elektronika d.o.o.
Vodovodna cesta 100
1000 Ljubljana
Tel. +386 1568 0126
Fax +386 1568 9107
info@ic-elect.si

GENERA d.o.o.
Prevale 10
1236 Trzin
Tel. +386 14393050
Fax +386 14393090
genera@genera.si

South Africa
Shorrock Automation (Pty) Ltd
Postnet Suite # 219
Private Bag X 8,Elardus Park
0047 PRETORIA
Tel. +27 12 4500300
Fax +27 12 4500322
sales@shorrock.co.za

Spain
DICOMAT S.L.
Avda. de la Industria, 36
Apartado Correos, 1.178
28108 - Alcobendas (Madrid)
Phone +34 91 6621362
Fax +34 91 6610089
info@dicomat.com

Sri Lanka
please contact WAGO India

Sweden
WAGO Sverige AB
Tyskland Filial
Box 11127, 161 11 BROMMA
Besöksadress: Adolfsbergsv. 31
Tel. +46 858410680
Fax +46 858410699
info.se@wago.com

Switzerland
WAGO CONTACT SA
Rte. de l'Industrie 19
Case Postale 168
1564 Domdidier
Phone +41/26 676 75 00
Fax +41/26 676 75 01
info.switzerland@wago.com

Syria
Zahabi Co.
8/5 Shouhadaa St., P.O. Box 8262
Aleppo
Phone +963 21 21 22 235 / 6
Fax +963 21 21 24 768
info.uae@wago.com

Taiwan R.O.C.
WAGO Contact, Ltd.
5F., No.168, Jiankang Rd
Zhonghe City
Taipei County 23585, Taiwan
Phone +886 2 22250123
Fax +886 2 22251511
info.taiwan@wago.com

Thailand
WAGO Representative Office Thailand
4th Floor, KS Building
213/6-8 Rachada-Phisek Road
Dingdaeng, Bangkok 10400
Tel. +66 2 6935611
Fax +66 2 6935612
warongkon.khankham@wago.com

US Power Distribution Co., Ltd.
4th Floor, KS Building
213/6-8 Rachada-Phisek Road
Dingdaeng, Bangkok 10400
Tel. +66 2 2763040
Fax +66 2 2763049
uspower2014@gmail.com

Tunisia
please contact WAGO France

Turkey
WAGO Elektronik Sanayi ve Ticaret Ltd. Şti.
Yukan Dudullu Mahallesi Bayraktar Bulvarı
Cad. Hattat Sok. No. 10
34775 Umraniye - Istanbul
Tel. +90 216 472 1133
Fax +90 216 472 9910
info.tr@wago.com

Ukraine
NPP Logicon
Predslavinskaya street, 39, office 303
03150 Kiev
Tel. +380 44 5228019
Fax +380 44 2611803
info@logicon.ua

OOO Micropribor
ul. Kotelnikova, 4
03115 Kiev
Tel. +380 44 5369386
Fax +380 44 5369387
sales@micropribor.kiev.ua

United Arab Emirates (UAE)
WAGO Middle East (FZC)
SAIF Zone, Q4-282
P.O. Box: 120665
Sharjah, UAE
Phone +971 6 5579920
Fax +971 6 5579921
info.uae@wago.com

Uruguay
Fivisa Electricidad
Avda. Urugay 1274
11100 Montevideo
Tel. +59 829 020 808
Fax +59 829 021 230
info@fivisa.com.uy

USA
WAGO CORPORATION
N120 W19129 Freistadt Road
Germantown, WI 53022
Tel. +1 262 255 6222
Fax +1 262 255 3232
Toll-Free: 1-800 DIN Rail (346-7245)
info.us@wago.com

Venezuela
PETROBORNAS, C.A.
C.C. PLAZA AEROPUERTO - PISO 1 - LOCAL P1 - β - 03
(8015) UNARE - PUERTO ORDAZ - ESTADO BOLÍVAR
REPUBLICA BOLIVARIANA DE VENEZUELA
Tel. +58 286 951 3382
Fax +58 286 951 3382
info@petrobornas.com

Vietnam
please contact WAGO Germany (Minden)

Version: 10/2015
Current addresses at www.wago.com

Notes

Notes

WAGO is a registered trademark of WAGO Verwaltungsgesellschaft mbH.

WE INNOVATE!

WAGO Kontakttechnik GmbH & Co. KG
Postfach 2880 · D · 32385 Minden
Hansastraße 27 · D · 32423 Minden
info@wago.com
www.wago.com

Headquaters	+49 571 887 - 0
Sales	+49 571 887 - 222
Order Service	+49 571 887 - 333
Technical Support	+49 571 887 - 555
Fax	+49 571 887 - 169

0888-6003/0500-6901 – Automation Technology 2015/2016 US – 01/2016-00 – Printed in Germany – Subject to design changes