HTI-GESAB

Your energy optimiser

Process heat for industrial plants at sea and on land.

The future of our energy supply poses major challenges for all of us.
Our strength is the systematic orientation at your needs.

Welcome to ***HTI-GESAB***.

www.hti-ellerau.de

This is who we are - *HTI-GESAB*.

The HTI-GESAB Hoch-Temperatur Industrieanlagen GmbH founded 1967 in the North of Hamburg (Ellerau).

Since this time all of our products have been closely linked with the subject of providing heat energy for the most varied industrial applications. Today, and in the future, more importance is and will be placed on the responsible handling of our energy resources than ever before. As our customer you can justifiably expect technical, customer-specific solutions where existing heat energy is regained and flows back into the thermal utilization process. We have the technologies and the know-how available for you.

What our customers say about us:
Mr. S….. from the company S … emphasised: “We didn’t have any discussions when we redesigned our production. The thermal oil-fired boilers, controls and pumps, heat exchangers and secondary circuits will again be installed by HTI. We’ve had excellent experience with this over the last 20 years.”

The boss of a large shipyard is also prepared to comment: “This consulting service the HTI experts provided in the planning stage of our new ship series was absolutely unique. They really helped us to save a lot of money. That convinced us!”

A critical technical manager from the bitumen manufacturing sector needed an automatic cleaning facility for the new thermal oil plant from us: “I wouldn’t have thought that HTI would be so flexible and innovative. They struggled together with us to find the best solution. That’s our idea of expert advice. That was exemplary cooperation and I am totally happy with it.”

Our employees … our suppliers … our production processes … Our highly-motivated team of specialists is always at your side. All this serves the quality and the trust in our products. Our specifications and quotations are always detailed and complete! We also show you alternatives. You will already benefit from our long-term practical experience during the first technical discussions.
An advantage not to be underestimated, which we offer our customers free of charge during the projecting stage.

With full commitment to your optimised energy management.
Use our strengths to your advantage!

Process heat with system. Worldwide - *HTI-GESAB*.

- Thermal oil plants
- Steam plants
- Hot water plants
- Natural steam plants
- Heat recovery plants
- Heat exchangers
- Air pre-heaters
- Accessories

Concentrating strengths - with safety - certified

Our national and international experience allows us to offer you the best in heat energy solutions and deliver well-engineered products. Our systems work with all currently available solid, liquid and gas fuels.

Certificates

We work in compliance with all Regulations of the European Community and international Acceptance Organisations.

Location

Due to the proximity to Hamburg and therefore the ship builders (shipyards) and ship owners we have been delivering to all renowned European and international shipyards and shipping companies for decades.








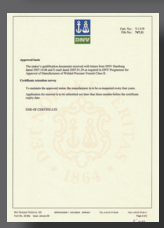

Boiler plants from - *HTI-GESAB*.

Our customers require process heat and come from the most varied sectors of industry. Heating outputs of up to 15.000 kW are manufactured in Ellerau and larger plants upon enquiry. In the meantime, more than 800 plants have been delivered for maritime navigation and more than 700 land plants, a fact which highlights our competence and our experience in this sector.

Industrial sectors and applications

Precast concrete industry

- The sand and gravel silos require heating so that the moist material does not freeze
- The mixing water is warmed up to accelerate the setting of the concrete
- After pouring the concrete, the vibrating tables, drying chambers and formwork are heated for quick setting

Asphalt and bitumen plants

- The storage and mixing tanks must be heated to retain the flowability of the asphalt, respectively the bitumen
- The same applies to the pipe lines and dispensing stations, which require an accompanying heating
- Heating of pitch tanks
- Manufacture of roofing paper

Food industry

- Heating of baking ovens in large bakeries
- Heating of deep fryers to fry meat and fish, as well as for the manufacture of potato chips and crisps
- Deodorising of oils and fats
- Distillation and fractioning processes
- Heating of cooking cauldrons through indirect steam generation via heat transfer oil
- Blood processing in large slaughterhouses or butcheries

Textile industry

- Heating of dryers for tenter frames and dyeing vats
- Indirect steam generation to vaporize carpet fibres
- Heating for calenders

Electroplating

- Bath heating

Technology and know-how from - *HTI-GESAB*.

Chemical industry

- Heating of stirring cauldrons and reaction receptacles as well as cooling with the same heat transfer
- Heating of sea water de-salination plants
- Wax candle manufacture
- Soap manufacture
- Heating of defrosting containers, countercurrent apparatus to generate warm or hot water, respectively steam
- Heating for autoclaves

Coating industry

- Drying of printed foils
- Adhesive bonding of foils
- Wallpaper industry
- Roller and calender heating in the paper and cardboard industry

Timber industry

- Press heating for the manufacture of particle boards
- Melting container heating

Laundries and hospital plants

- Indirect steam generation via heat transfer oil to heat washing and distillation plants

Shipbuilding

- Heating of all heat exchangers to maintain ship operations such as, e.g. heavy oil tanks, separators, end pre-heaters, lubricating oil pre-heaters, generation of hot water and steam, heating for air-conditioning systems and similar
- Cargo heating such as e.g. for pitch tankers, bitumen tankers, crude oil tankers and special chemicals
- Dual circuit systems for chemical tankers

Heat recovery plants

- Heat recovery after thermal afterburning plants
- Exhaust gas heater after diesel motors

Automobile industry

- Heating of drying systems for individually required processes such as coating processes, temperature testing units for clock-controlled load heating

Technology and know-how from - *HTI-GESAB*.

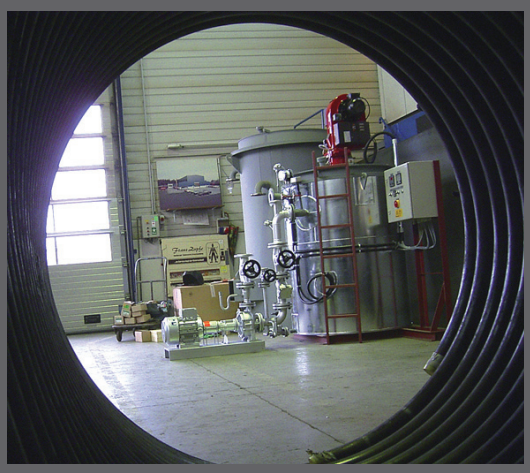

Thermal oil heater from - *HTI-GESAB*.

Oil/Gas-fired thermal oil heater Type *HE*

The HTI-Gesab thermal oil heater is built according to the regulations of the pressure vessel regulation and is designed as radiant heater with downstream convection heating surfaces as threepass system. The pipe system, manufactured from boiler steel pipe, is surrounded by a gastight, welded sheet metal steel, a mineral wool insulation and a galvanized sheet metal case. The generously dimensioned radiant combustion chamber guarantees high operational life span of the boiler because it is not possible for the flames to touch the pipe system, thus avoiding local heating surface overload. The unit stands or lies on a stable base frame. The HTI-Gesab thermal oil heater is suitable for the combustion of commercially available liquid or gaseous fuels. Mineral or synthetic media can be used as heat transfer media. The selection of the heat transfer medium must be agreed with HTI-Gesab. The HTI-Gesab thermal oil heater is delivered with all necessary connections for the monitoring and control equipment. Please see the valid dimension sheets for the dimensions, where dimensional changes or an adjustment to technical requirements are subject to change without notice.

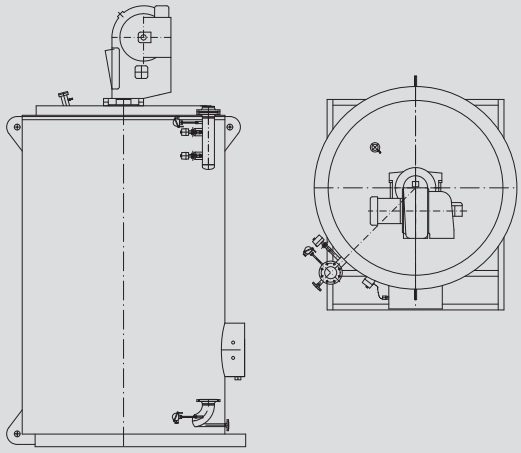

Exhaust gas hot oil heater Type *AHE*

The HTI-Gesab exhaust gas hot oil heater serves as heat exchanger between hot exhaust gases and heat transfer medium. The heating surface consists of several coaxially mounted, cylindrical pipe baskets. The pipe cylinders are supported both mutually and against the flue gastight welded, round boiler shell. The weight of the pipe system is transferred to the boiler shell via a heavy support frame. The design is particularly suitable for ship operation.
When installing on ships, attention must be paid that the heater must be installed vibration-damped. This includes heater fastening and the connection with the pipe systems. The arrangement must be agreed with HTI-Gesab. A round flange of flat-rolled steel is welded on both sides of the sheet steel boiler shell. The respective counter flange, including screws, nuts and seals, is part of the delivery scope. A compact carrier design, which will be designed according to orderer's choice, is used for installation in the existing on-site steel construction.

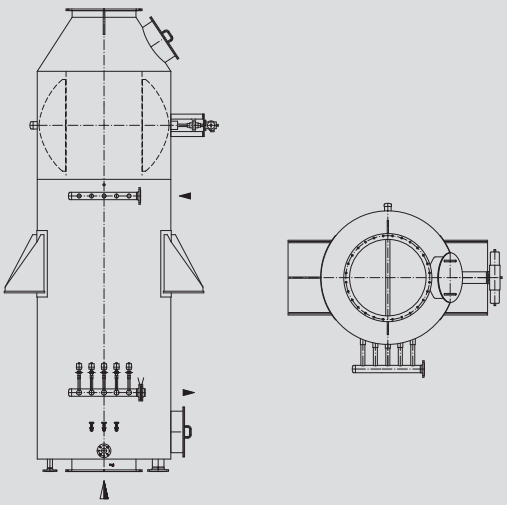

Electrically operated hot oil heater Type *EHE*

The HTI-Gesab electrically operated hot oil heater is built according to the regulations of DIN 4754, the pressure vessel regulation and the VDE regulations. The HTI-Gesab electrically operated hot oil heater consists of a pipe system, in which organic or synthetic heat transfer media are heated up according to the once-through principle. Flange heating elements are installed on the front side of a u-shaped pipe system. The flow around the heating elements is chosen so that the permissible film temperature of the heat carrier medium is not exceeded. The pipe system is supported in itself and installed in a frame of profile steel. The insulation of mineral wool and final galvanized sheet metal case prevents unnecessary heat emission and is optimally designed. The HTI-Gesab electrically operated hot oil heater is delivered with all necessary connections for the monitoring and control equipment. Please see the valid dimension sheets for the dimensions, where dimensional changes or an adjustment to technical requirements are subject to change without notice.

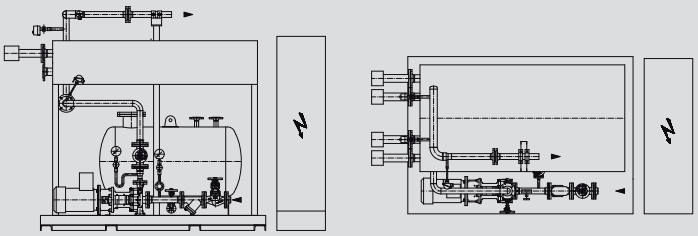

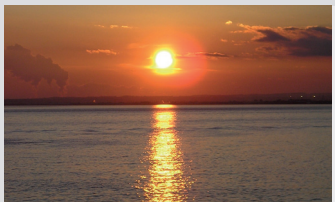

Hot water heaters from - *HTI-GESAB*.

Oil/Gas-fired hot water heater Type ***HWE***

The HTI-Gesab hot water heater is built according to the regulations of the pressure vessel regulation and is designed as radiant heater with downstream convection heating surfaces as threepass system. The pipe system, manufactured from boiler steel pipe, is surrounded by a gastight, welded sheet metal steel, a mineral wool insulation and a galvanized sheet metal case. The generously dimensioned radiant combustion chamber guarantees high operational life span of the boiler because it is not possible for the flames to touch the pipe system, thus avoiding local heating surface overload. The unit stands or lies on a stable base frame. The HTI-Gesab hot water heater is suitable for the combustion of commercially available liquid or gaseous fuels.
The HTI-Gesab hot water heater is delivered with all necessary connections for the monitoring and control equipment. Please see the valid dimension sheets for the dimensions, where dimensional changes or an adjustment to technical requirements are subject to change without notice.

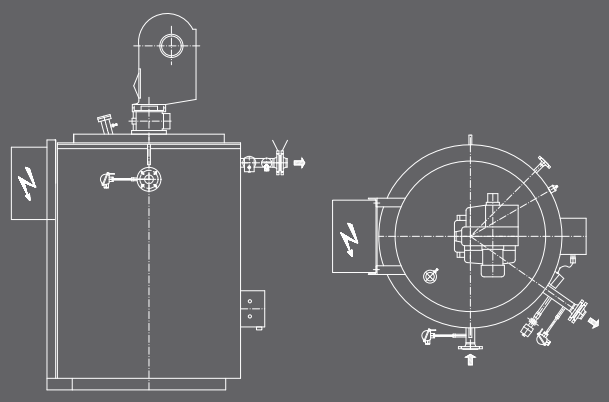

Exhaust gas hot water heater Type ***AWE***

The HTI-Gesab exhaust gas hot water heater serves as heat exchanger between hot exhaust gases and heat transfer medium. The heating surface consists of several coaxially mounted cylindrical pipe baskets. The pipe cylinders are supported both mutually and against the flue gastight welded, round boiler shell. The weight of the pipe system is transferred to the boiler shell via a heavy support frame. The design is particularly suitable for ship operation.
When installing on ships, attention must be paid that the heater must be installed vibration-damped. This includes heater fastening and the connection with the pipe systems. The arrangement must be agreed with HTI-Gesab. A round flange of flat-rolled steel is welded on both sides of the sheet steel boiler shell. The respective counter flange, including screws, nuts and seals is part of the delivery scope. A compact carrier design, which will be designed according to orderer's choice, is used for installation in the existing on-site steel construction.

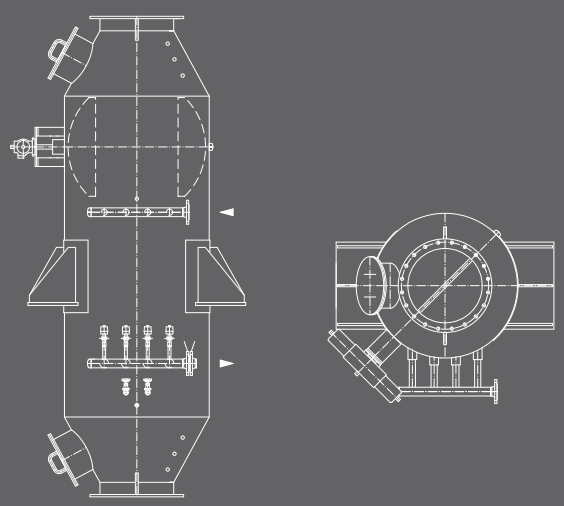

Electrically operated hot water heater Type ***EWE***

The HTI-Gesab electrically operated hot water heater is built according to the pressure vessel regulation and the VDE regulations. The HTI-Gesab electrically operated hot water heater consists of a pipe system, in which the desired heat transfer medium is heated up according to the once-through principle. Flange heating elements are installed on the front side of a u-shaped pipe system. The flow around the heating elements is chosen so that the permissible film temperature of the heat carrier medium is not exceeded. The pipe system is supported in itself and installed in a frame of profile steel. The insulation of mineral wool and final galvanized sheet metal case prevents unnecessary heat emission and is optimally designed. The HTI-Gesab electrically operated hot water heater is delivered with all necessary connections for the monitoring and control equipment. Please see the valid dimension sheets for the dimensions, where dimensional changes or an adjustment to technical requirements are subject to change without notice.

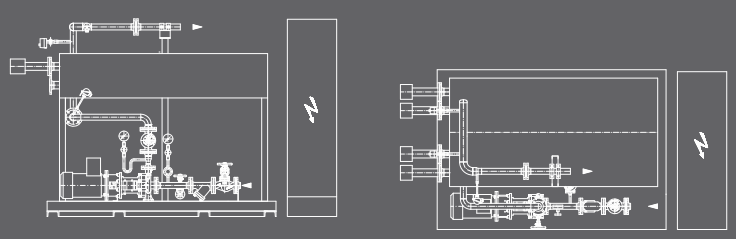

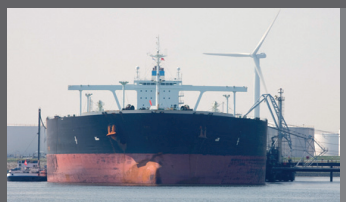

Industry heating systems

Technology for the palm oil industry with THT steam systems

THT high pressure steam generators in type NDK natural circulation procedures are applied where ever high process temperatures with steam are required. Various application areas are produced for the palm oil and bio-diesel refinery sector. The new generation high-pressure steam generators further developed by HTI-Gesab have created basic improvements and thus advantages for the customer.

High-speed steam generators from - *HTI-GESAB*.

High-speed steam generator Type ***HDE***

The HTI-Gesab high-speed steam generator is built according to the Technical Regulations for Steam Boilers. The TÜV (German Technical Control Board) regulations for material quality and processing are complied with.
The HTI-Gesab high-speed steam generator is a flow steam generator which works according to the Benson principle. The pipe system is manufactured from boiler steel pipe, is surrounded by a gas-tight, welded sheet metal steel, a mineral wool insulation and a galvanized sheet metal case. The unit stands or lies on a stable base frame. A reciprocating pump, which is controlled together with the burner, supplies only as much water to the evaporator pipe system as the burner supplies warmth for the evaporation. As a result of the precise tuning of the pump and burner output, as well as the low water content in the pipe system, the HTI-Gesab high-speed steam generator provides the projected quantity of saturated steam within a few minutes.

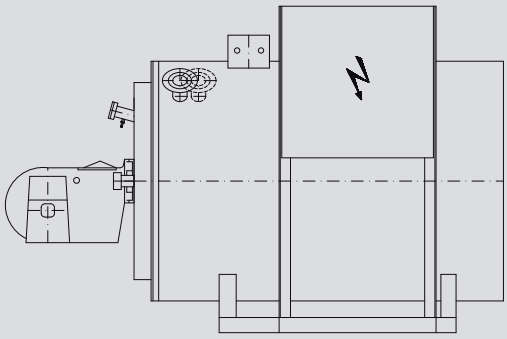

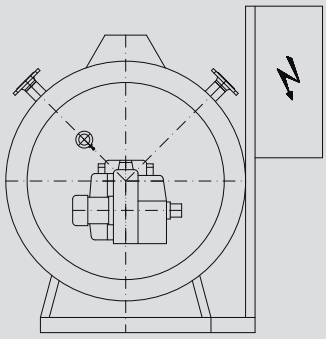

Exhaust gas high-speed steam generator Type ***ADE***

The HTI-Gesab exhaust gas high-speed steam generator serves as heat exchanger between hot exhaust gases and heat transfer medium. The heating surface consists of several coaxially mounted cylindrical pipe baskets. The pipe cylinders are supported both mutually and against the flue gastight welded round boiler shell. The weight of the pipe system is transferred to the boiler shell via a heavy support frame.
A round flange of flat-rolled steel is welded on both sides of the sheet steel boiler shell. The respective counter flange, including screws, nuts and seals is part of the delivery scope. A compact carrier design, which will be designed according to orderer's choice, is used for installation in the existing on-site steel construction.

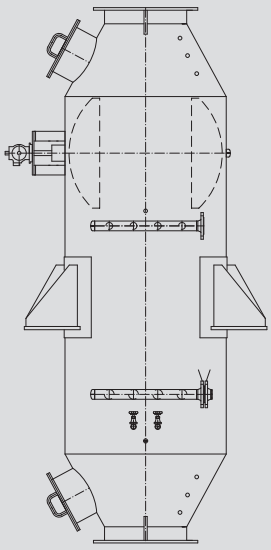

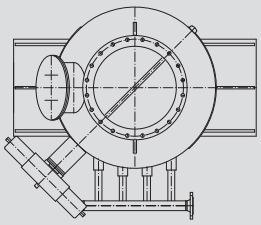

High-speed steam generators from - *HTI-GESAB*.

Electrically operated high-speed steam generator Type ***EDE***

The HTI-Gesab electrically operated high-speed steam generator, as a pressure vessel, is built according to the Technical Regulations for Steam Boilers. The TÜV (German Technical Control Board) regulations for material quality and processing are complied with. The heating is electrical. A construction and water pressure sample is conducted by the TÜV (certificate). The DIN and AD instruction sheets are observed during manufacture. The steam generator is equipped with an easily dismantled heating assembly. The dismantling length of the heating assembly must be taken into consideration during installation (cleaning). The steam generator is equipped with all necessary nozzles and brackets (steam, water). The insulation of mineral wool and final galvanized sheet metal case prevents unnecessary heat emission and is optimally designed. The HTI-Gesab electrically operated high-speed steam generator is delivered with all necessary connections for the monitoring and control equipment. Please see the valid dimension sheets for the dimensions, where dimensional changes or an adjustment to technical requirements are subject to change without notice.

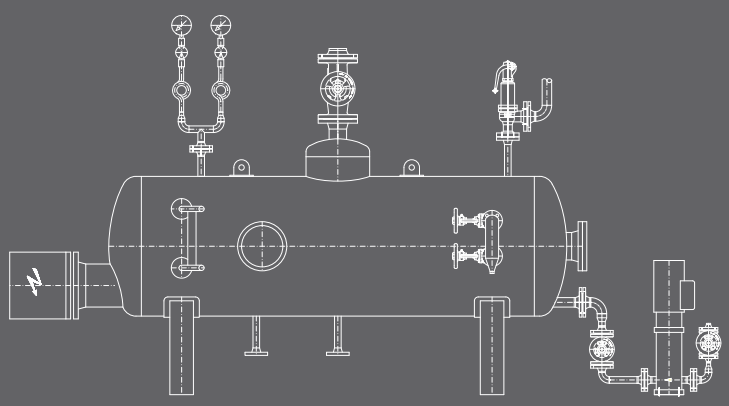

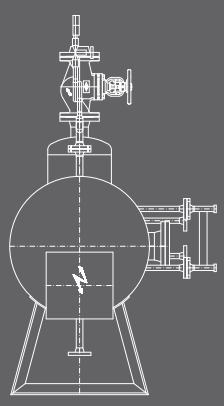

Exhaust gas recovery units from - *HTI-GESAB*.
for Type HE, HWE, HDE, NDK, RDK

Combustion air pre-heater

The HTI-Gesab combustion air pre-heater withdraws the residual energy from the flue gas and therefore pre-heats the combustion air of the boilers. This considerably increases the level of efficiency of oil/gas fired boilers and extends the life of the units. The HTI-Gesab combustion air pre-heater is designed as bare-tube heat exchanger. This effects high heat transmission to the combustion air and guarantees easy cleaning of the heating surfaces.

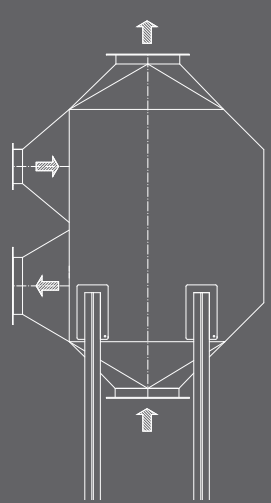

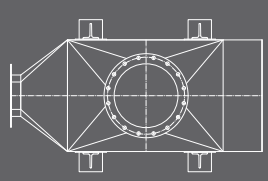

High-pressure steam boilers from - *HTI-GESAB*.

Oil/Gas-fired natural steam boiler Type ***NDK***

Steel boilers for high-pressure steam in the natural circulation system without the use of an additional feed water or forced circulation pump for the pressure range of 80 bar and 95 bar. The boiler pressure chamber consists of vertical rising pipes which are welded into ring headers top and bottom and lie gas-tight close together. The pressure chamber consists of two pipe baskets which are connected with each other via steam and condensate pipes. The pipe baskets are installed tension-free in a gastight welded flue gas casing. The boiler can only be delivered in standing design as the natural circulation system does not function in lying design. The boiler is equipped with a sturdy steel substructure. It is therefore not necessary to lay a foundation on-site. The boiler can be erected on a concrete floor with normal load capacity. The load per area unit is between 1-2 kg/cm². The demountable boiler allows easy and thorough cleaning of the combustion chamber and the two flues. The boiler is fitted with heat insulation of mineral wool which is clad in structured aluminium sheet. The choice of material and manufacture are compliant with valid regulations for steam boilers.
A pressure test certificate is obtained from the TÜV for every boiler. The basis for the design and construction is the Technical Regulations for Steam Boilers (TRD). All welds are conducted in accordance with DIN 8563, Part 3 evaluation group CS and DIN 8562. The boiler can only be operated in a closed steam-condensate circulation. The necessary feed water must correspond with the requirements of TRD 611. The pressure chamber is manufactured from seamless pipes, material St35.8.

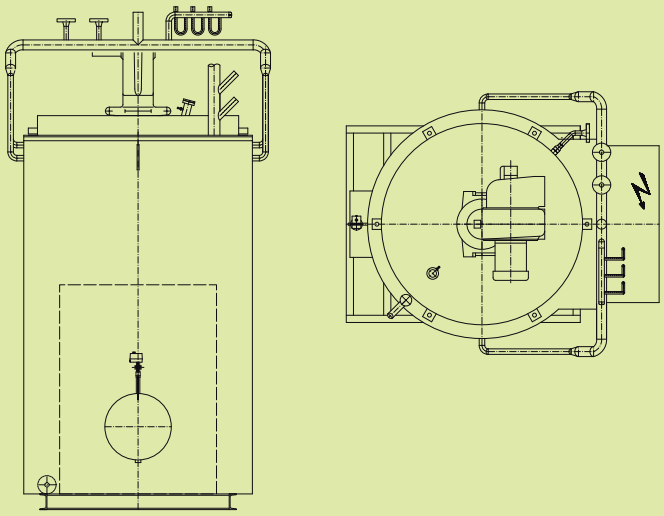

Fire tube steam boiler from - *HTI-GESAB*.

Oil/Gas-fired fire tube steam boiler Type ***RDK***

The pressure chamber consists of the cylindrical boiler shell, the front and rear base, the large-volume flue, the heat insulated, front turning chamber, the fire tubes of the second pass incl. all connecting sleeves as well as inspection holes, resp. head and/or manholes for internal viewing and inspection. The built-on front turning chamber is heat insulated, gastight and in swing-out design for cleaning and inspection of the fire tubes and is prepared for the addition of an oil, gas or combined burner. The dimensions of the flue and the fire tube convection heating surface are generously designed to achieve an optimum heat transition at low NOx values. Low resistance on the flue gas side requires relatively low electrical output from the combustion air blower. Calculation, choice of material and manufacture are compliant with German regulations (Technical Regulations for Steam Boilers). The acceptance of the high-pressure boilers at the factory is conducted by a German Technical Control Board, resp. through a factory expert in the case of type-tested boilers.

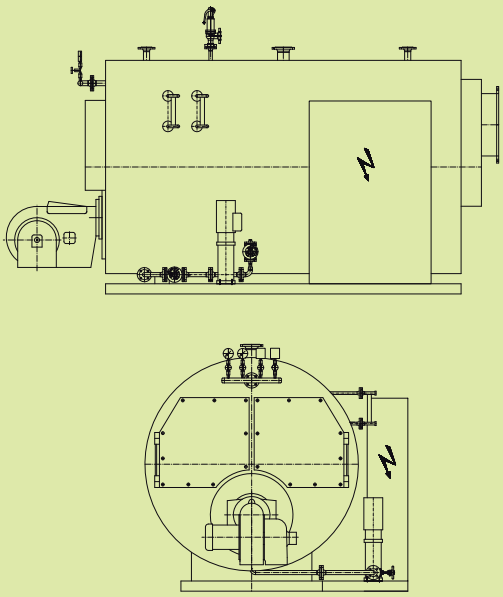

Benefit from our competence
Experience process heat at its best.

HTI-GESAB
Hoch-Temperatur Industrieanlagen GmbH
Registered office
Sauerbruchstraße 11
Germany · D-25479 Ellerau
Phone: 0049 (0) 4106 - 70 09-0
Fax: 0049 (0) 4106 - 70 09-99
info@hti-ellerau.de
www.hti-ellerau.de

Register of Companies at the District Courts
Norderstedt 31 HRB 4699
Turnover tax identification number
DE 813275111

We support your production processes with tried-and-proven technology and reliable handling, comprehensive documentation and customer and spare parts service around the clock and worldwide.
We are there for you whenever you need us.
We will also tread individual paths with you.
If you are not yet one of our customers, we look forward to the opportunity of convincing you of our efficiency.

With best regards from Ellerau

Olaf Bornholdt

HTI-GESAB
Hoch- Temperatur Industrieanlagen GmbH

www.hti-ellerau.de

graphic designed by Schilling Werbeagentur